City of Baltimore
Department of Transportation

DEPARTMENT OF TRANSPORTATION
BALTIMORE CITY

Book of Standards
2010

Brandon M. Scott
Mayor

CITY OF BALTIMORE
DEPARTMENT OF GENERAL SERVICES
BOOK OF STANDARDS - 2010
TABLE OF CONTENTS

Category No. 1 - Preliminary

Std. No.	Description	Sheet No.
BC 103.01	Engineer's Office No. 2 - Trailer	1 of 1
BC 103.02	Engineer's Office No. 3 – Trailer	1 of 1
BC 104.01-1	Guidelines for Temporary Traffic Control	1 of 7
BC 104.01-2	Temporary Traffic Control Plan Preparation and Requirements	2 of 7
BC 104.01-3	Temporary Traffic Control Plan Preparation and Requirements	3 of 7
BC 104.01-4	Sign Spacing, Taper and Buffer Lengths Criteria	4 of 7
BC 104.01-5	Portable Variable Message Sign Placement	5 of 7
BC 104.01-6	Barrier Delineation Barrier 4' or Closer to Edge Line	6 of 7
BC 104.01-7	Barrier Delineation Barrier between 4' and 15' from Edge Line	7 of 7
BC 104.02-2	Shoulder Work / 2-Lane, 2 Way Equal or Less Than 40 mph	1 of 1
BC 104.02-4	Lane Shift Right or Left Side / 2-Lane, 2-Way Equal or Less Than 40 mph / 15 Min. – 12 Hrs. or Daytime Only	1 of 1
BC 104.02-6	Work in Center of Low-Volume Road 2-Lane, 2-Way/Equal/Less Than 40 mph / 15 Min. – 12 Hrs. or Daytime Only	1 of 1
BC 104.02-8	Lane Shift for Complete Travel Way Blockage / 2-Lane, 2-Way Equal/Less Than 40 mph / 15 Min. – 12 Hrs. or Daytime Only	1 of 1
BC 104.02-10	Flagging Operation/2-Lane, 2-Way Equal/Less Than 40 mph	1 of 1
BC 104.02-12	Bypass Detour/2-Lane, 2-Way Equal/Less Than 40 mph/Over 12 Hrs. or Nightime Use	1 of 1
BC 104.02-14	Intersection Flagging Operation 2-Lane, 2-Way Equal/Less Than 40 mph	1 of 1
BC 104.03-2	Shoulder Work/Multilane Undivided Equal/Less Than 40 mph	1 of 1
BC 104.03-4	Left Lane Closure/Multilane Undivided Equal/Less Than 40 mph	1 of 1
BC 104.03-6	Right Lane Closure/Multilane Undivided Equal/Less Than 40 mph	1 of 1
BC 104.03-8	Partial Roadway Closure/Multilane Undivided Equal/Less Than 40 mph	1 of 1
BC 104.03-10	Intersection Far-Left Lane Closure/Multilane Undivided Equal/Less Than 40 mph	1 of 1
BC 104.03-12	Intersection Far-Right Lane Closure/Multilane Undivided Equal/Less Than 40 mph	1 of 1
BC 104.03-14	Intersection Far-Side Lane Closure/Multilane Undivided Equal/Less Than 40 mph	1 of 1
BC 104.04-2	Shoulder Work / Divided Unconnected Equal/Less Than 40 mph	1 0f 1
BC 104.04-4	Left Lane Closure / Divided Unconnected Equal/Less Than 40 mph	1 0f 1
BC 104.04-6	Right Lane Closure / Divided Unconnected Equal/Less Than 40 mph	1 0f 1
BC 104.04-8	Center Lane Closure / Divided Unconnected Equal/Less Than 40 mph	1 0f 1
BC 104.04-12	Roadway Closure / Divided Unconnected Equal/Less Than 40 mph/ 12 Hrs. or Nightime Use	1 of 1
BC 104.04-14	Left Turn Bay Closure / Divided Unconnected Equal/Less Than 40 mph	1 0f 1
BC 104.04-16	Intersection (Left Lane, Turn Bay) Closure / Divided Unconnected Equal/Less Than 40 mph	1 0f 1

Std. No.	Description	Sheet No..
BC 104.05	Precast Temporary 32” F Shape Concrete Traffic Barrier (Pin and Loop Joint)	1 of 2
BC 104.05-1	Precast Temporary 32” F Shape Concrete Traffic Barrier (Pin and Loop Joint)	2 of 2
BC 104.05-2	Shoulder Work/ Exp-Freeway/Equal/Less Than 40 mph	1 of 1
BC 104.05-3	Roadway Shift/ Exp-Freeway/Greater Than 40 mph	1 of 1
BC 104.05-4	Lanes Divide/ Exp-Freeway/Greater Than 40 mph	1 of 1
BC 104.05-5	Lanes Shift/ Exp-Freeway/Greater Than 40 mph/ Over 12 hrs. or Nighttime Use	1 of 1
BC 104.05-6	Lanes Divide/ Exp-Freeway/ Greater Than 40 mph/ Over 12 hrs. or Nighttime Use	1 of 1
BC 104.05-7	Right Lane Closure/ Exp-Freeway Greater Than 40 mph	1 of 1
BC 104.05-8	Left Lane Closure/ Exp-Freeway Greater Than 40 mph	1 of 1
BC 104.05-10	Center Lane Closure/ Exp-Freeway Greater Than 40 mph	1 of 1
BC 104.06-5	Pedestrian and Curb Lane Control/ Multilane Undivided, All Speeds/ Over 12 hrs. or Nightime Use	1 of 1
BC 104.06-12	Pavement Edge Drop-Off 2.5” or Less (Between Traffic Lanes and Shoulder)	1 of 1
BC 104.10-1	Precast Concrete Barrier (Typical Panel)	1 of 3
BC 104.10-2	Precast Concrete Barrier (Section A-A)	2 of 3
BC 104.10-3	Precast Concrete Barrier Flasher Bracket Details	3 of 3
BC 105.01	Treatment for Abandoned Manholes	1 of 1
BC 111.01	Traffic Control for Work Activity Off The Road	1 of 1
BC 112.01	Traffic Control for Partial Lane Closure	1 of 1
BC 112.02	2 Right (Left) Lanes Closure / Divided Uncontrolled	1 of 1
BC 114.01	Traffic Control for Two-Way Left Turn Lane Closure	1 of 1
BC 115.01	Flagging Control at 3-Leg Intersection (1)	1 of 1
BC 115.02	Flagging Control at 3-Leg Intersection (2)	1 of 1
BC 115.03	Flagging Control at 3-Leg Intersection (3)	1 of 1
BC 115.04	Flagging Control at 3-Leg Intersection (4)	1 of 1
BC 115.05	Flagging Control at 3-Leg Intersection, Far-Side Closure	1 of 1
BC 116.01	Traffic Control for Right Turn Lane Closure	1 of 1
BC 117.01	Pedestrian Control for Sidewalk Bypass	1 of 1
BC 117.01-1	Ped and Curb-Lane Control/Multilane Undiv, Speeds Less Than or Equal to 40 mph/Over 12 Hrs. or Nighttime Use	1 of 4
BC 117.01-2	Ped and Curb-Lane Control/Multilane Undiv, Speeds Less Than or Equal to 40 mph/Over 12 Hrs. or Nighttime Use	2 of 4
BC 117.01-3	Ped and Curb-Lane Control/Multilane Undiv, Speeds Less Than or Equal to 40 mph/Over 12 Hrs. or Nighttime Use	3 of 4
BC 117.01-4	Ped and Curb-Lane Control/Multilane Undiv, Speeds Less Than or Equal to 40 mph/Over 12 Hrs. or Nighttime Use	4 of 4
BC 117.02	Covered Walkway	1 of 1

Category No. 4 - Structures

BC 400.01	Year Built Numerals	1 of 1
BC 400.02	Year Built Numerals	1 of 1
BC 400.03	Year Built Numerals	1 of 1
BC 418.02	Steel 'H' Pile Splice Detail	1 of 1
BC 418.03	Reinforced 'H' Pile Tip Details	1 of 1
BC 418.04	Heavy Duty C.I.P. Concrete Pile Splice	1 of 1
BC 424.91	Bridge Parapet	1 of 1

Std. No.	Description	Sheet No.
BC 424.92	Bridge Median Barrier	1 of 1
BC 429.01	Cover Plate Details	1 of 1
BC 430.01	Haunch and Steel Stud Details at Top of Beams	1 of 1
BC 431.01	Longitudinal Joint in Bridge Deck	1 of 1
BC 432.01	Stay-In-Place Steel Forms for Concrete Slabs Supported by Steel Beams	1 of 1
BC 437.01	Standard Scupper Type 'C'	1 of 1
BC 437.02	Standard Scupper Type 'D'	1 of 1
BC 437.03	Standard Scupper Grating	1 of 1
BC 440.01	Support Bracket for Bridge Mounted 30'-40' Light Poles on Jersey Barrier	1 of 1
BC 440.03	Bridge Lighting Conduit Details	1 of 1
BC 440.04	Controller Cabinet Support	1 of 1
BC 440.05	Emergency Telephone Support	1 of 1
BC 445.01	Single Cell Modular Compression Seal for Roadway Joints	1 of 1
BC 446.01	Multi-Cell Modular Compression Seal for Roadway Joints	1 of 1
BC 446.02	Multi-Cell Details	1 of 1
BC 447.01	Transflex Compression Seal for Roadway Joints	1 of 1
BC 450.01-1	Bearing Shoe Details Spans Less than Fifty Feet (50') c/c Bearings	1 of 2
BC 450.01-2	Bearing Shoe Details Spans Less than Fifty Feet (50') c/c Bearings	2 of 2
BC 451.01-1	Bearing Shoe Details Spans Fifty Feet (50') To One Hundred and Fifty Feet (150') c/c Bearings	1 of 2
BC 451.01-2	Bearing Shoe Details Spans Fifty Feet (50') To One Hundred and Fifty Feet (150') c/c Bearings	2 of 2
BC 452.01	Bearing Shoe Details Spans Less than One Hundred Fifty Feet (150') c/c Bearings	1 of 1
BC 453.01-1	Bearing Shoe Details Spans Greater Than One Hundred Fifty Feet (150') c/c Bearings	1 of 2
BC 453.01-2	Bearing Shoe Details Spans Greater Than One Hundred Fifty Feet (150') c/c Bearings	2 of 2
BC 454.01-1	Bearing Shoe Details Spans Greater Than One Hundred Fifty Feet (150')) c/c Bearings	1 of 2
BC 454.01-2	Bearing Shoe Details Spans Greater Than One Hundred Fifty Feet (150')) c/c Bearings	2 of 2
BC 460.01-1	Fixed Bearing Short Length Spans (Grade 50 Steel)	1 of 2
BC 460.01-2	Fixed Bearing Short Length Spans (Grade 50 Steel)	2 of 2
BC 461.01-1	Expansion Bearing Short Length Spans (Grade 50 Steel)	1 of 2
BC 461.01-2	Expansion Bearing Short Length Spans (Grade 50 Steel)	2 of 2
BC 462.01-1	Fixed Bearing Medium Length Spans (Grade 50 Steel)	1 of 3
BC 462.01-2	Fixed Bearing Medium Length Spans (Grade 50 Steel)	2 of 3
BC 462.01-3	Fixed Bearing Medium Length Spans (Grade 50 Steel)	3 of 3
BC 463.01-1	Bronze Expansion Bearing Medium Length Spans (Grade 50 Steel)	1 of 3
BC 463.01-2	Bronze Expansion Bearing Medium Length Spans (Grade 50 Steel)	2 of 3
BC 463.01-3	Bronze Expansion Bearing Medium Length Spans (Grade 50 Steel)	3 of 3
BC 470.01	Concrete Barrier Bridge Parapet and Median	1 of 1

Category No. 5 – Paving

BC 500.01	Typical Driveway	1 of 1
BC 500.11	Alley Entrance	1 of 1
BC 500.12	Concrete Alley	1 of 1
BC 500.13-1	Bus Stopping Pad	1 of 2
BC 500.13-2	Bus Stopping Pad	2 of 2

Std. No.	Description	Sheet No.
BC 500.21	Cul-de-Sac	1 of 1
BC 500.22	Tee Turn-Around	1 of 1
BC 572.01	Placement of Bar Mats Reinforced Concrete Pavement	1 of 1
BC 572.02	Clipped or Welded Bar Mats Reinforced Concrete Pavement	1 of 1
BC 572.03	Hinged Clipped Bar Mat Reinforced Concrete Pavement	1 of 1
BC 572.04	Hinged Clipped Bar Mat Reinforced Concrete Pavement	1 of 1
BC 572.05	Welded Wire Mesh Reinforced Concrete Pavement	1 of 1
BC 572.21	Requirements for Load Transfer Devices Reinf. Concrete Pavement	1 of 1
BC 572.22	Load Transfer Assembly Expansion Joints	1 of 1
BC 572.23	Load Transfer Assembly Contraction Joints	1 of 1
BC 572.24	Load Transfer Assembly Expansion Joints	1 of 1
BC 572.25	Load Transfer Assembly Contraction Joints	1 of 1
BC 572.26	Dowel Weld Load Transfer Assembly Expansion Joints	1 of 1
BC 572.27	Dowel Weld Load Transfer Assembly Contraction Joints	1 of 1
BC 572.41	Dowel Assembly Expansion Joints	1 of 1
BC 572.42	Dowel Assembly Contraction Joints	1 of 1
BC 572.43	Dowel Tube Expansion Joint Assembly	1 of 1
BC 572.44	Dowel Bar Keeper	1 of 1
BC 572.51	Dowel Sleeve Expansion Joint Assembly	1 of 1
BC 572.61-1	Longitudinal Tie Devices	1 of 2
BC 572.61-2	Special Longitudinal Tie Device	2 of 2
BC 572.92-1	Types of Joints Cement Concrete Pavement	1 of 2
BC 572.92-2	Types of Joints Cement Concrete Pavement	2 of 2
BC 576.17-1	Street Cut and Repair - Temporary Steel Plate	1 of 2
BC 576.17-2	Street Cut and Repair Recessed Temporary Steel Plate	2 of 2
BC 576.18-1	Street Cut and Repair - Rigid Pavement	1 of 2
BC 576.18-2	Street Cut and Repair - Rigid Pavement	2 of 2
BC 576.19-1	Street Cut and Repair - Full Depth - Flexible Pavement	1 of 2
BC 576.19-2	Street Cut and Repair - Full Depth - Flexible Pavement	2 of 2
BC 576.20-1	Street Cut and Repair - Flexible Surface - Rigid Base	1 of 2
BC 576.20-2	Street Cut and Repair - Flexible Surface - Rigid Base	2 of 2
BC 576.22-1	Street Cut and Repair - Utility Adjustment Raise 1" to 6"	1 of 3
BC 576.22-2	Street Cut and Repair - Utility Adjustment Lower 2" Max.	2 of 3
BC 576.22-3	Street Cut and Repair - Utility Adjustment Lower 2" to 6"	3 of 3

Category No. 6 – Shoulders

BC 615.01	Standard Hot Mix Asphalt Curb	1 of 1
BC 620.01	Standard Type 'A' Curb-Standard Type 'A' Modified Curb	1 of 1
BC 620.02	BC Type 'A' Curb - BC Type 'A' Modified Curb	1 of 1
BC 620.03	Standard Alley Return Curb	1 of 1
BC 620.04	Standard Mountable 'V' Type Combination Curb and Gutter	1 of 1
BC 620.05	Special Type 'A' Combination Curb and Gutter - Special BC Type 'A' Curb	1 of 1
BC 620.06	Resetting Granite Curb	1 of 1
BC 620.11	Standard Combination Curb and Gutter Type 'A' – Standard Type 'A' Modified	1 of 1
BC 620.12	Special Monolithic - Combination Curb and Gutter	1 of 1
BC 640.01	Standard Curb Opening Detail - Curb Section	1 of 1
BC 640.02	Standard Curb Opening Detail - Curb and Gutter Section	1 of 1
BC 645.01	Monolithic Concrete Median - Type 'A'	1 of 1
BC 645.02	Monolithic Concrete Median - Type 'B'	1 of 1
BC 645.03	Monolithic Concrete Median - Type 'C'	1 of 1
BC 645.04	Std. Monolithic Concrete Median, Type 'A'	1 of 1

Std. No.	Description	Sheet No.
BC 645.05	Std. Monolithic Concrete Median, Type 'A' Modified	1 of 1
BC 648.01	34 Inch, F Shape Concrete Barrier Single Face, on New Concrete Pavement	1 of 1
BC 648.02	34 Inch, F Shape Concrete Barrier Single Face, on Existing Concrete Pavement	1 of 1
BC 648.03	42 Inch, F Shape Concrete Median Traffic Barrier End Transition	1 of 1
BC 648.04	42 Inch, F Shape Concrete Traffic Barrier Single Face Type 1 (w/Earth Backing In Fill)	1 of 1
BC 648.05	42 Inch, F Shape Concrete Traffic Barrier Single Face Type 2 (Free Standing In Fill)	1 of 1
BC 648.06	42 Inch, F Shape Concrete Median Traffic Barrier	1 of 1
BC 648.07	Diagonal Bar For Slip Formed 34 Inch or 42 Inch F Shape Single Face Concrete Traffic Barrier	1 of 1
BC 648.08	42 Inch F Shape Concrete Median Traffic Barrier Bifurcated 4'-0" to 8'-0"	1 of 1
BC 648.21	34 Inch F Shape Concrete Median Traffic Barrier Double Face	1 of 1
BC 655.01	Sidewalk Expansion Joints	1 of 1
BC 655.05	Typical Section Concrete Sidewalk	1 of 1
BC 655.10	Typical Section Brick Sidewalk	1 of 1
BC 655.11	Sidewalk Ramps Perpendicular	1 of 1
BC 655.12	Sidewalk Ramps Parallel	1 of 1
BC 655.13	Sidewalk Ramps Combination	1 of 1
BC 655.21	Cut-Through Median and Island Openings	1 of 1
BC 655.22	Ramped Median and Island Openings	1 of 1
BC 655.40	Detectable Warning Surfaces	1 of 1
BC 656.01	Concrete Stairsteps and Ornamental Iron Railings	1 of 1
BC 660.01	Traffic Barrier W Beam - General Notes and Details	1 of 1
BC 660.02	Traffic Barrier W Beam - Trail End Anchorage General Notes and Details	1 of 1
BC 660.03	Traffic Barrier W Beam - Splice Joint	1 of 1
BC 660.04	Traffic Barrier W Beam with Wood Offset Block	1 of 1
BC 660.11	Traffic Barrier W Beam - End Treatment Cut to Fill	1 of 1
BC 660.14	Traffic Barrier W Beam - Shoulder Barrier Layout Right Shoulder	1 of 1
BC 660.15	Traffic Barrier W Beam - Shoulder Barrier Treatment at Obstacles	1 of 1
BC 660.16	Traffic Barrier W Beam - Median Barrier Treatment at Obstacles	1 of 1
BC 660.21	Traffic Barrier W Beam at Bridge Approaches Cut	1 of 1
BC 660.22	Traffic Barrier W Beam at Bridge Approaches Embankment 15 feet or Less	1 of 1
BC 660.23	Traffic Barrier Beam at Bridge Approaches Embankment 15 feet or Greater	1 of 1
BC 660.24	Traffic Barrier W Beam with Type A End Anchorage (Single Rail)	1 of 1
BC 660.25	Traffic Barrier W Beam with Type A End Anchorage (Double Rail)	1 of 1
BC 660.26	Traffic Barrier W Beam with Type A End Anchorage (Option 1)	1 of 1
BC 660.27	Traffic Barrier W Beam with Type A End Anchorage (Option 2)	1 of 1
BC 660.28	Type B Traffic Barrier End Treatment	1 of 1
BC 660.29	Type D Traffic Barrier End Treatment	1 of 1
BC 660.31	Traffic Barrier W Beam Approach Flare	1 of 1
BC 660.32	Traffic Barrier W Beam Anchorage Casting	1 of 1
BC 660.41	Traffic Barrier W Beam Anchorage at Structures	1 of 1
BC 660.51	Traffic Barrier W Beam Median Barrier End Treatment	1 of 1
BC 660.52	Traffic Barrier W Beam Median Barrier End Block	1 of 1
BC 660.61	Traffic Barrier W Beam Barricade	1 of 1
BC 662.01-1	Traffic Barrier Box Beam Median Barrier Section 4 - Splice Detail	1 of 2
BC 662.01-2	Traffic Barrier Box Beam Shoulder Barrier Section-Splice Detail	2 of 2
BC 662.02-1	Traffic Barrier Box Beam Shoulder Barrier Typical End Treatment	1 of 2

Std. No.	Description	Sheet No.
BC 662.02-2	Traffic Barrier Box Beam Shoulder Barrier Typical End Treatment	2 of 2
BC 662.11	Traffic Barrier Box Beam Shoulder Barrier Layout Right Shoulder	1 of 1
BC 662.12	Traffic Barrier Box Beam Shoulder Barrier Treatment at Obstacles	1 of 1
BC 662.13	Traffic Barrier Box Beam Median Barrier Treatment at Obstacles	1 of 1
BC 662.31	Traffic Barrier Box Beam Anchorage at Structure	1 of 1
BC 662.51-1	Traffic Barrier Box Beam Median Barrier - Details for Raised Medians	1 of 2
BC 662.51-2	Traffic Barrier Box Beam Median Barrier - Details for Flush Medians	2 of 2
BC 662.61-1	Traffic Barrier Box Beam Median Barrier – Typical Layout at Bridges	1 of 2
BC 662.61-2	Traffic Barrier Box Beam Median Barrier - Typical End Treatment	2 of 2
BC 690.01-1	Chain-Link Fence with Brace Rails and Fence Treatment at Expansion Joint	1 of 6
BC 690.01-2	Chain-Link fence with Tension Wire Top and Bottom	2 of 6
BC 690.01-3	Fence Gate Detail for Chain-Link Fence	3 of 6
BC 690.01-4	Chain-Link Fence Treatment at Vertical Break in Alignment	4 of 6
BC 690.01-5	Post Mounting Details Chain-Link Fence	5 of 6
BC 690.01-6	Post Mounting Details Chain-Link Fence	6 of 6

Category No. 7 – Roadside Improvements

BC 701.01	Tree Well	1 of 1
BC 701.11	Lightning Protection for Trees	1 of 1
BC 701.22	Root Pruning Detail	1 of 1
BC 701.31	Mulching Shrub Beds and Planting Patterns	1 of 1
BC 701.32	Tree Protection Detail for Determination of Critical Root Zone	1 of 1
BC 701.33	Tree Protection Fence, Plan	1 of 1
BC 701.34	Typical Signage for Tree Preservation Area Sign	1 of 1
BC 701.35	Tree Protection Fence over Concrete or Asphalt, Elevation	1 of 1
BC 701.36	Tree Protection Fence for Grass Areas, Elevation	1 of 1
BC 701.41	Soil Shoulders for Shrub Beds Planted on Slopes	1 of 1
BC 701.51	Wrapping Tree and Grading Tree on Slope	1 of 1
BC 701.61-1	Tree Planting Standards For Site Plan Projects	1 of 4
BC 701.61-2	Tree Planting Standards For Site Plan Projects	2 of 4
BC 701.61-3	Tree Planting Standards For Site Plan Projects	3 of 4
BC 701.61-4	Tree Planting Standards For Site Plan Projects	4 of 4
BC 702.01	General Standard for Tree Planting	1 of 1
BC 702.02	Planting Trees Under 5" Caliper	1 of 1
BC 702.03	Planting Trees 5" Caliper and Over	1 of 1
BC 702.04	Tree Planting Detail for Street Tree in Pit	1 of 1
BC 702.05	Structure Free Zone Garage or Other Cavity Extending Under Sidewalk	1 of 1
BC 702.06	Mulch Detail For Trees	1 of 1
BC 702.07	Shrub and Ground Cover Planting Detail	1 of 1
BC 704.01	Tree Pit Paving Detail: Granite or Concrete Block For Use in High Traffic Areas Only	1 of 1
BC 704.02	Pavers Over Tree Pit	1 of 1
BC 704.03	Tree Pit Drainage Details	1 of 1
BC 704.04	Continuous Soil Panel Under Sidewalk	1 of 1
BC 704.05	Continuous Planting Strip	1 of 1
BC 705.01	Root Paths Perspective	1 of 1
BC 705.02	Root Paths Details	1 of 1
BC 706.01	Tree Pit Guard	1 of 1
BC 706.02	Expandable Tree Grate and Frame Details	1 of 1
BC 710.01-1	Fastener for Tree Staking	1 of 5
BC 710.01-2	Deciduous Trees Transplanted by Tree Spade	2 of 5
BC 710.01-3	Staking 3" to 4" Deciduous Trees and 10’ to 12’ Evergreen Trees	3 of 5

Std. No.	Description	Sheet No.
BC 710.01-4	Staking Minor and Evergreen Trees to 10’ Height	4 of 5
BC 710.01-5	Staking Trees under 5" Caliper	5 of 5
BC 710.11	Planting Small Planting Stock	1 of 1
BC 710.21	Rest Area Parking for Handicapped	1 of 1
BC 710.31-1	Planting Trees over 5" Caliper Transplanted by Machine	1 of 2
BC 710.31-2	Guying Trees Over 4" Caliper	2 of 2
BC 711.01-1	Modified Tree Pit with Tree Root Barrier	1 of 2
BC 711.01-2	Modified Tree Pit (Section A-A)	2 of 2
BC 712.01-1	Specification for Root Control	1 of 2
BC 712.01-2	Specification for Root Control (Cont.)	2 of 2

Category No. 8 Utilities/Lighting

BC 801.01	Roadway Pedestal Base for Light Poles – Augured	1 of 1
BC 801.02	Roadway Pedestal Base for Light Poles – Square	1 of 1
BC 801.03	Foundation Base for Light poles - Steel Sub-Base	1 of 1
BC 801.04	Roadway Foundation Base for Light Poles - Free Standing Type	1 of 1
BC 801.05	Roadway Pedestal Base for Inner Harbor Type Light Poles	1 of 1
BC 801.07	Bolton Hill, Fells Point and Otterbein Base	1 of 1
BC 802.01-1	Conduit Expansion Coupling Parapet	1 of 2
BC 802.01-2	Conduit Expansion Joint for Suspended Electrical Duct	2 of 2
BC 802.02	Junction Boxes and Pull Boxes	1 of 1
BC 802.03-1	Conduit Square Bore Adapter	1 of 4
BC 802.03-2	Conduit Square Bore Adapter	2 of 4
BC 802.03-3	Duct Plugs, Bell Ends and Terminators	3 of 4
BC 802.03-4	Split Duct	4 of 4
BC 802.04-1	5” PVC, Plastic Utility Duct on Bridge Hanger Supports	1 of 6
BC 802.04-2	5” PVC, Plastic Utility Duct on Bridge Hanger Supports	2 of 6
BC 802.04-3	5” PVC, Plastic Utility Duct on Bridge Hanger Supports	3 of 6
BC 802.04-4	5” PVC Duct on Bridges – Back to Back Expansion Joint Installation	4 of 6
BC 802.04-5	5” PVC Duct on Bridges – Back to Back Expansion Joint Installation	5 of 6
BC 802.04-6	5” PVC, Plastic Utility Duct on Bridge Stop Ring Installation and Duct Termination	6 of 6
BC 803.01-1	Conduit Sections in Casing Pipe	1 of 5
BC 803.01-2	Conduit Sections in Casing Pipe	2 of 5
BC 803.01-3	Conduit Sections in Casing Pipe	3 of 5
BC 803.01-4	Conduit Sections in Casing Pipe	4 of 5
BC 803.01-5	Conduit Sections in Casing Pipe	5 of 5
BC 804.01	Handbox - Conduit Typical Installation	1 of 1
BC 804.02	Handbox - Conduit Standard Concrete Base	1 of 1
BC 804.03	Handbox - Conduit Standard Frame	1 of 1
BC 804.04	Handbox - Conduit Standard Cover	1 of 1
BC 804.05	Handbox - Conduit Standard Cover - Details 'A' and 'B'	1 of 1
BC 804.06	Handbox - Conduit Standard Cover - Detail 'C'	1 of 1
BC 804.07	Handbox - Conduit Standard Cover - Details 'D' and 'E'	1 of 1
BC 804.08	Handbox - Conduit Standard Cover - Locking Bolt and Surface Design Details	1 of 1
BC 804.09	Standard Handbox Cover – DTT	1 of 1
BC 804.10	Meter Cabinet for Electrical Service	1 of 1
BC 804.11	Roadway Lighting Distribution Panel Schematic Diagram 480Y/277 – Unmetered	1 of 1
BC 808.01	Typical Light Standard - 25 Foot AW Pole	1 of 1
BC 808.02-1	Typical Light Standard - 30 Foot AW Pole	1 of 2
BC 808.02-2	Typical Light Standard - 30 Foot AW Pole on Transformer Base	2 of 2

Std. No.	Description	Sheet No.
BC 808.03	Typical Light Standard - Steel Pole Dimensions	1 of 1
BC 808.04	Typical Pole Arms for 25' & 30' Poles	1 of 1
BC 808.05	Combination Pole for Light Standard and Traffic Signals	1 of 1
BC 808.06	11’ – 6” Lighting Standard for Residential Streets	1 of 1
BC 808.07	Lighting Standard Miscellaneous Details	1 of 1
BC 808.08	Standard Anchor Bolts	1 of 1
BC 808.09	Typical Installation of Light Standard on Bridge Parapet Adjacent to Sidewalk	1 of 1
BC 808.10-1	Typical Installation of Light Standard on Bridge Parapet Adjacent to Roadway	1 of 2
BC 808.10-2	Typical Installation of Light Standard on Bridge Parapet Adjacent to Roadway	2 of 2
BC 808.11	Lighting Accessories Plumizer Attachment and Parts	1 of 1
BC 808.12	Lighting Accessories Ballast Plate and Shims	1 of 1
BC 808.13	Bridge Lighting Conduit Details	1 of 1
BC 808.14	Detail of Aluminum Pole and Arm Plate Construction	1 of 1
BC 808.15-1	Base Plate for 11'-6", 25' & 30' Poles, Detail of Bolt Cover	1 of 2
BC 808.15-2	Base Plate for 11'-6", 25' & 30' Poles, Detail of Bolt Cover	2 of 2
BC 808.16	Decorative Pole and Tenon	1 of 1
BC 808.17-1	32' Square Tapered Pole	1 of 2
BC 808.17-2	32' Square Tapered Pole - Base Cover	2 of 2
BC 818.13	Typical Transformer Bases	1 of 1
BC 823.01	Underpass Luminaire Type I Luminaire Mounting Concrete Structure	1 of 1
BC 823.02	Underpass Luminaire Type II Luminaire Mounting Steel Structure	1 of 1
BC 823.03	Underpass Luminaire Type III Luminaire Mounting – Wall, Pier or Abutment	1 of 1
BC 824.01-1	Standard Duct Sections	1 of 2
BC 824.01-2	Standard Conduit Cross-Sections	2 of 2
BC 824.02-1	Plastic Utility Duct PVC (Poly Vinyl Chloride) General Information	1 of 2
BC 824.02-2	Plastic PVC Duct Spacers General Information	2 of 2
BC 824.05	Conduit Pole Connection, Single, Double and Triple	1 of 1
BC 824.06	Duct Entrance into Manhole	1 of 1
BC 824.07	Duct Reinforcement at Railroad Crossing	1 of 1
BC 824.08	Reinforcing Slab for Shallow Electric Duct	1 of 1
BC 824.09	Duct Typical Section 8-5", 4-3” and 2-4"	1 of 1
BC 824.10	Duct Transition to Precast Recessed Extension	1 of 1
BC 825.01	Steel Details for 6 Foot by 12 Foot Line Manhole	1 of 1
BC 825.02-1	Details for 6 Foot by 12 Foot Poured in Place Line Manhole	1 of 2
BC 825.02-2	Details for 6 Foot by 12 Foot Poured in Place Line Manhole	2 of 2
BC 825.04	Braced Coffer Dam for Poured in Place Manhole	1 of 1
BC 825.05	Steel Details for 6 Foot by 12 Foot Transformer Manhole	1 of 1
BC 825.06-1	Details for 6 Foot by 12 Foot Poured in Place Transformer Manhole	1 of 2
BC 825.06-2	Details for 6 Foot by 12 Foot Poured in Place Transformer Manhole	2 of 2
BC 825.07-1	4’-0” x 4’-0” x 4’-0” Manhole – Conduit	1 of 3
BC 825.07-2	4’-0” x 4’-0” x 4’-0” Manhole – Conduit	2 of 3
BC 825.07-3	4’-0” x 4’-0” x 4’-0” Manhole – Conduit	3 of 3
BC 825.08-1	Excavation and Shoring for Precast Manholes	1 of 2
BC 825.08-2	Excavation and Shoring for Precast Manholes	2 of 2
BC 825.09-1	Poured in Place Manhole – 6’x8’	1 of 2
BC 825.09-2	Poured in Place Manhole – 6’x8’	2 of 2
BC 825.10	Soldier Pile Bracing for Precast Manhole	1 of 1
BC 825.11	Manhole - Conduit Standard Installation	1 of 1

Std. No.	Description	Sheet No.
BC 825.12	Manhole - Conduit Standard Cover	1 of 1
BC 825.13	Manhole - Conduit Standard Frame	1 of 1
BC 825.14	Manhole - Conduit Standard Cover – DTT	1 of 1
BC 825.15-1	6'x17'-6"x9' Precast Network Transformer Manhole - Details	1 of 5
BC 825.15-2	6'x17'-6"x9' Precast Network Transformer Manhole – Details	2 of 5
BC 825.15-3	6'x17'-6"x9' Precast Network Transformer Manhole – Details	3 of 5
BC 825.15-4	6'x17'-6"x9' Precast Network Transformer Manhole – Details	4 of 5
BC 825.15-5	6'x17'-6"x9' Precast Network Transformer Manhole – Details	5 of 5
BC 826.01-1	Precast Line Manhole - 6'x12'x7' Headroom Top Half	1 of 2
BC 826.01-2	Precast Line Manhole - 6'x12'x7' Headroom Bottom Half	2 of 2
BC 826.02-1	Precast Line Manhole - 6'x12'x8' Headroom Top Half	1 of 2
BC 826.02-2	Precast Line Manhole - 6'x12'x8' Headroom Bottom Half	2 of 2
BC 826.03-1	Precast Line Manhole - 6'x12'x9' Headroom Top Half	1 of 2
BC 826.03-2	Precast Line Manhole - 6'x12'x9' Headroom Bottom Half	2 of 2
BC 826.04	Precast Line Manhole - 6'x12'x7' - 8' -9' HR Bar Schedule	1 of 1
BC 826.05	End and Side Knockout Details - Precast Manhole	1 of 1
BC 826.06	Insert Details for Recessed Extension - Precast Manhole	1 of 1
BC 826.07-1	Precast Recessed Extension	1 of 2
BC 826.07-2	Precast Recessed Extension - Manhole Adjustments	2 of 2
BC 826.08	Accessories for Precast Manholes	1 of 1
BC 826.09	Cast-In-Place Recessed Wall Extension	1 of 1
BC 827.01-1	Precast Manhole 6’x8’x7’ Headroom Top Half	1 of 2
BC 827.01-2	Precast Manhole 6’x8’x7’ Headroom Bottom Half	2 of 2
BC 827.02-1	Precast Manhole 6’x8’x8’ Headroom Top Half	1 of 2
BC 827.02-2	Precast Manhole 6’x8’x8’ Headroom Bottom Half	2 of 2
BC 827.03	Precast Manhole 6’x8’x7’-8’ HR Bar Schedule	1 of 1
BC 830.01-1	Duct Identification	1 of 6
BC 830.01-2	Duct Identification	2 of 6
BC 830.01-3	Duct Identification	3 of 6
BC 830.01-4	Duct Identification	4 of 6
BC 830.01-5	Duct Identification	5 of 6
BC 830.01-6	Duct Identification	6 of 6
BC 830.02	Conduit Transposition	1 of 1

Category No. 8 Utilities/Signals

BC 880.01	Steel Strain Pole	1 of 1
BC 880.02	Heavy Duty Steel Strain Pole	1 of 1
BC 880.03	Joint Use Steel Strain Pole	1 of 1
BC 880.04	Heavy Duty Joint Use Steel Strain Pole	1 of 1
BC 880.05-1	Multi-Purpose Pole	1 of 2
BC 880.05-2	Multi-Purpose Pole	2 of 2
BC 880.06-1	Galvanized Steel Mast Arm Pole	1 of 3
BC 880.06-2	Galvanized Steel Mast Arm Pole	2 of 3
BC 880.06-3	Galvanized Steel Mast Arm Pole	3 of 3
BC 880.07	Push Button Post	1 of 1
BC 880.08	Steel Pedestal Pole	1 of 1
BC 880.09-1	Inner Harbor Type Square Steel Poles & Mast Arms	1 of 4
BC 880.09-2	Inner Harbor Type Square Steel Poles & Mast Arms	2 of 4
BC 880.09-3	Inner Harbor Type Square Steel Poles & Mast Arms	3 of 4
BC 880.09-4	Inner Harbor Type Square Steel Poles & Mast Arms	4 of 4
BC 880.10	Inner Harbor Type Square Pedestal Pole	1 of 1
BC 887.01	Pole, Post and Pedestal Foundation Details – Traffic	1 of 1

Std. No.	Description	Sheet No.
BC 887.02	Standard Anchor Bolts – Traffic	1 of 1
BC 890.01	Category (C) Controller Cabinet Foundation Base	1 of 1
BC 890.02	Type 332 And Category (E) Controller Cabinet Foundation Base	1 of 1
BC 890.10	Type 336S Cabinet Base Adapter	1 of 1
BC 890.11	Push Button Sign	1 of 1
BC 890.12	Cabinet Mounting Bracket – Traffic	1 of 1
BC 891.01	Existing Ductbank Support System	1 of 1
BC 892.01-1	Adapting Plastic Duct to Other Duct Materials	1 of 10
BC 892.01-2	Adapting Plastic Duct to Other Duct Materials	2 of 10
BC 892.01-3	Adapting Plastic Duct to Other Duct Materials	3 of 10
BC 892.01-4	Adapting Plastic Duct to Other Duct Materials	4 of 10
BC 892.01-5	Adapting Plastic Duct to Other Duct Materials	5 of 10
BC 892.01-6	Adapting Plastic Duct to Other Duct Materials	6 of 10
BC 892.01-7	Adapting Plastic Duct to Other Duct Materials	7 of 10
BC 892.01-8	Adapting Plastic Duct to Other Duct Materials	8 of 10
BC 892.01-9	Adapting Plastic Duct to Other Duct Materials	9 of 10
BC 892.01-10	Adapting Plastic Duct to Other Duct Materials	10 of 10
BC 893.01-1	Tree Root Barrier for Tree Pits	1 of 4
BC 893.01-2	Tree Root Barrier for Tree Pits	2 of 4
BC 893.01-3	Tree Root Barrier for Tree Pits	3 of 4
BC 893.01-4	Tree Root Barrier for Tree Pits	4 of 4

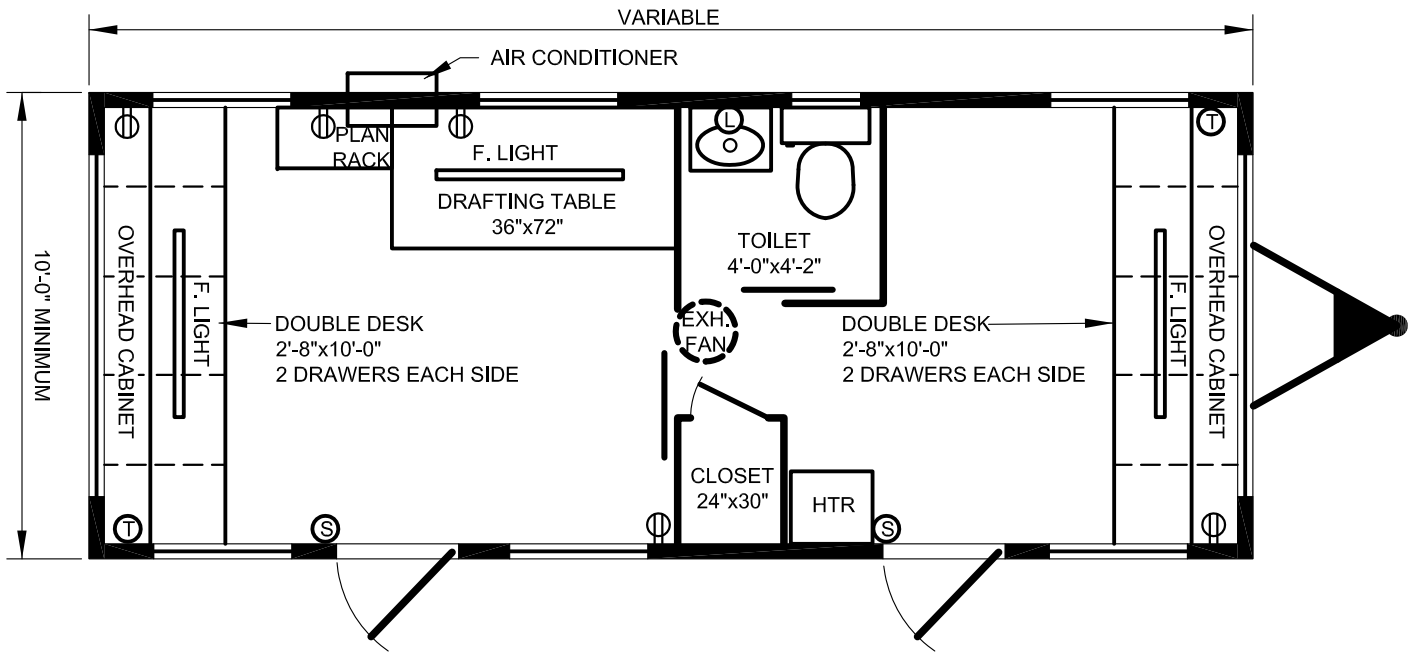

EXPLANATORY NOTES:

1. IN ADDITION TO THE EQUIPMENT INDICATED ABOVE, AIR CONDITIONING WILL BE REQUIRED, THE COST OF WHICH IS TO BE INCLUDED WITH THE LUMP SUM BID PRICE OF THE OFFICE. THE SYSTEM MUST BE CAPABLE OF MAINTAINING A TEMPERATURE OF 80° F DRY BULB AND APPROXIMATELY 50% RELATIVE HUMIDITY IN THE CONDITIONED AREA. WHEN OUTSIDE TEMPERATURES ARE 95° F DRY BULB AND 78° F WET BULB AT LEAST ONE UNIT WILL BE REQUIRED FOR EACH OF THE TWO COMPARTMENTS.

2. FURNITURE AND FIXTURES INDICATED ARE BASIC TO THE TRAILER. ADDITIONAL EQUIPMENT REQUIRED AND NOT SHOWN IS SO SPECIFIED IN SECTION 13 22 00 OF GENERAL SPECIFICATIONS.

3. DIMENSIONS FOR THE LENGTH MAY BE VARIED SO THAT WHEN MULTIPLIED BY THE WIDTH A MINIMUM INSIDE AREA OF 250 SQ. FT. WILL RESULT. MINIMUM HEIGHT TO BE 7'-0".

4. TOILET FACILITIES AS INDICATED IN THE TRAILER MAY BE CONNECTED TO AN APPROVED WATER SUPPLY AND TO A SEWER OR SEPTIC TANK SYSTEM, OR SEPARATE TOILET FACILITIES MEETING THE REQUIREMENTS OF PARAGRAPH (K) OF SECTION 13 22 00 OF THE SPECIFICATIONS MAY BE PROVIDED.

CITY OF BALTIMORE

APPROVED:

DIVISION CHIEF, TRANSPORTATION ENGINEERING AND CONSTRUCTION

DIRECTOR, DEPARTMENT OF TRANSPORTATION

CITY OF BALTIMORE
DEPARTMENT OF TRANSPORTATION
TRANSPORTATION ENGINEERING AND CONSTRUCTION

ENGINEER'S OFFICE
No.2 - TRAILER

STANDARD NO.
BC 103.01

ISSUED	REVISED	REVISED
8 / 2010		

SCALE : NONE

SHEET 1 OF 1

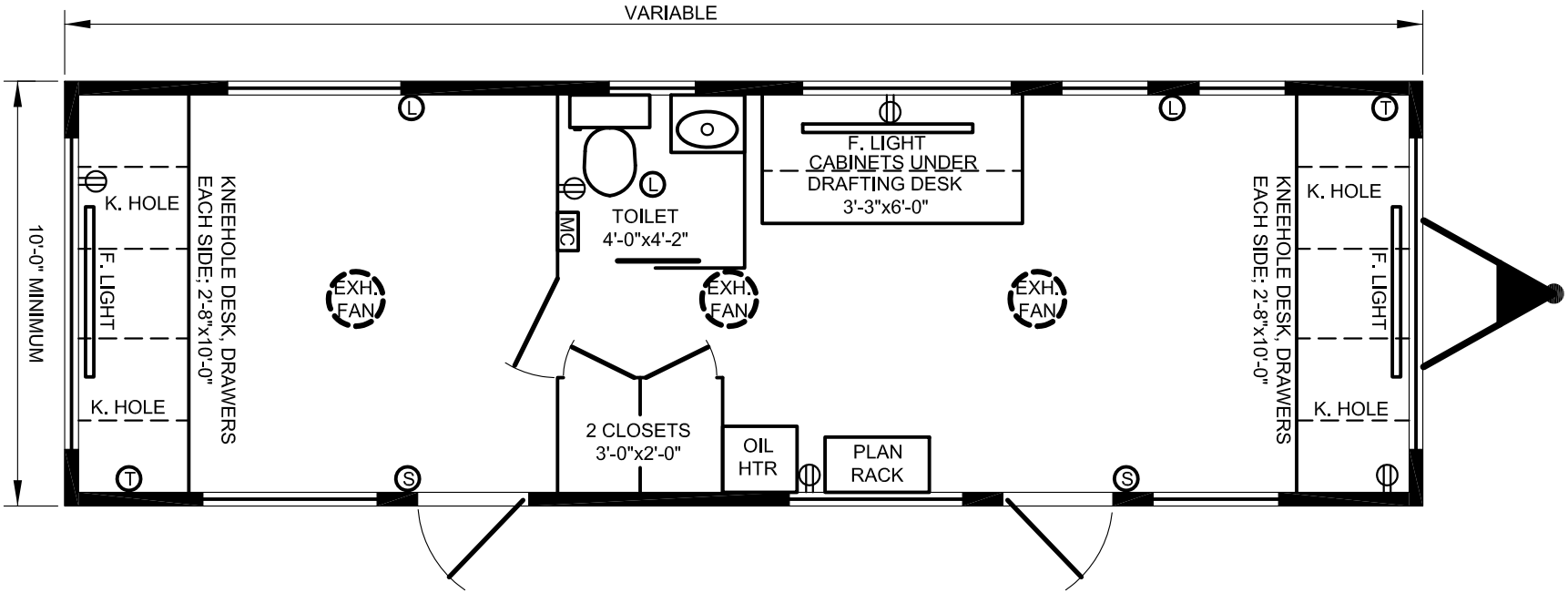

EXPLANATORY NOTES:

1. IN ADDITION TO THE EQUIPMENT INDICATED ABOVE, AIR CONDITIONING WILL BE REQUIRED, THE COST OF WHICH IS TO BE INCLUDED WITHIN THE LUMP SUM BID PRICE OF THE OFFICE. THE SYSTEM MUST BE CAPABLE OF MAINTAINING A TEMPERATURE OF 80° F DRY BULB AND APPROXIMATELY 50% RELATIVE HUMIDITY IN THE CONDITIONED AREA, WHEN OUTSIDE TEMPERATURES ARE 95° F DRY BULB AND 78° F WET BULB. AT LEAST ONE UNIT WILL BE REQUIRED FOR EACH OF THE TWO COMPARTMENTS.

2. FURNITURE AND FIXTURES INDICATED ARE BASIC TO THE TRAILER. ADDITIONAL EQUIPMENT REQUIRED AND NOT SHOWN IS SO SPECIFIED IN SECTION 13 22 00 OF GENERAL SPECIFICATIONS.

3. DIMENSIONS FOR THE LENGTH MAY BE VARIED SO THAT WHEN MULTIPLIED BY THE WIDTH A MINIMUM INSIDE AREA OF 400 SQ. FT. WILL RESULT. MINIMUM HEIGHT TO BE 7'-0".

4. TOILET FACILITIES AS INDICATED IN THE TRAILER MAY BE CONNECTED TO AN APPROVED WATER SUPPLY AND TO A SEWER OR SEPTIC TANK SYSTEM, OR SEPARATE TOILET FACILITIES MEETING THE REQUIREMENTS OF PARAGRAPH (K) OF SECTION 13 22 00 OF THE SPECIFICATIONS MAY BE PROVIDED.

CITY OF BALTIMORE
DEPARTMENT OF TRANSPORTATION
TRANSPORTATION ENGINEERING AND CONSTRUCTION

APPROVED:
DIVISION CHIEF, TRANSPORTATION ENGINEERING AND CONSTRUCTION
DIRECTOR, DEPARTMENT OF TRANSPORTATION

ENGINEER'S OFFICE
No.3 - TRAILER

STANDARD NO.
BC 103.02

ISSUED	REVISED	REVISED
8 / 2010		

SCALE : NONE

SHEET 1 OF 1

GUIDELINES FOR TEMPORARY TRAFFIC CONTROL

THESE GUIDELINES ARE FOR PREPARING TEMPORARY TRAFFIC CONTROL PLANS (TTCP) FOR CONSTRUCTION OR UTILITY WORK WITHIN OR ADJACENT TO THE STREETS OF BALTIMORE CITY. FOLLOWING THESE GUIDELINES WILL HELP DEVELOP AN ACCEPTABLE PLAN THAT MINIMIZES INCONVENIENCES TO THE DRIVING PUBLIC WHILE ASSURING SAFE CONDITIONS FOR WORKERS AND OTHER STREET USERS INCLUDING PEDESTRIANS AND BICYCLISTS.

DESIGN AND INSTALLATION OF TEMPORARY TRAFFIC CONTROL IN BALTIMORE CITY WILL BE DONE UTILIZING THE TEMPORARY TRAFFIC CONTROL PORTION OF THE MOST CURRENT MARYLAND STATE HIGHWAY ADMINISTRATION (MDSHA) BOOK OF STANDARDS AND THE MARYLAND MANUAL ON UNIFORM TRAFFIC CONTROL DEVICES (MUTCD) PART 6, TEMPORARY TRAFFIC CONTROL, AS BASIC GUIDELINES. THE GUIDELINES, REQUIREMENTS AND DETAILS PROVIDED HERE SUPPLEMENT THE ABOVE MENTIONED BASIC DOCUMENTS AND INCLUDE OTHER USEFUL INFORMATION THAT WILL FACILITATE DESIGN AND INSTALLATION OF APPROPRIATE TEMPORARY TRAFFIC CONTROLS. USERS OF THIS INFORMATION SHALL ALSO COMPLY WITH TRAFFIC CONTROL RELATED PORTIONS OF THE LATEST BALTIMORE CITY 2006 STANDARD SPECIFICATIONS FOR MATERIALS, HIGHWAYS, BRIDGES, UTILITIES AND INCIDENTAL STRUCTURES.

THE PURPOSE OF USING TEMPORARY TRAFFIC CONTROL DEVICES (TTCD) IS TO ENSURE ROADWAY SAFETY BY PROVIDING ORDERLY AND PREDICTABLE MOVEMENT OF VEHICULAR TRAFFIC AND THE GUIDANCE AND WARNING NECESSARY FOR STREET USERS, PEDESTRIANS AND BICYCLISTS TO NAVIGATE THE WORK ZONE SAFELY. AT THE COMPLETION OF WORK ACTIVITIES, STREET CONDITIONS SHALL BE FULLY RESTORED TO THOSE THAT EXISTED PRIOR TO THE WORK ACTIVITY.

STREET USER AND WORKER SAFETY AND ACCESSIBILITY TO WORK ZONES SHOULD BE INTEGRAL AND HIGH PRIORITY ELEMENTS OF EVERY PROJECT FROM PLANNING THROUGH DESIGN AND CONSTRUCTION. MAINTENANCE AND UTILITY WORK SHOULD BE PLANNED AND CONDUCTED WITH THE SAFETY OF ALL MOTORISTS, BICYCLISTS, PEDESTRIANS (INCLUDING THOSE WITH DISABILITIES), AND WORK ZONE PERSONNEL BEING CONSIDERED AT ALL TIMES. PERSONS INVOLVED IN DEVELOPING TTCP SHOULD BE FAMILIAR WITH PROVISIONS OF THE AMERICAN WITH DISABILITIES ACT.

ANY CONSIDERATIONS FOR CLOSURE OF A STREET OR SIDEWALK MUST BE CAREFULLY REVIEWED AND JUSTIFIED TO BALTIMORE CITY WITH RESPECT TO BOTH THE NECESSITY AS WELL AS THE IMPACT OF THE CLOSURE TO THE PUBLIC.

TEMPORARY TRAFFIC CONTROL ZONES IN BALTIMORE CITY MAY INCLUDE AT GRADE RAILROAD CROSSINGS. IT IS RECOMMENDED THAT EARLY CONTACT AND COORDINATION BE MADE WITH THE RAILROAD COMPANY OR MARYLAND TRANSIT ADMINISTRATION (LIGHT RAIL, METRO SUBWAY).

THESE GUIDELINES, MANUALS AND STANDARDS ADDRESS A WIDE VARIETY OF NECESSARY TRAFFIC CONTROL CONDITIONS, HOWEVER EVERY POSSIBLE SITUATION MAY NOT BE SHOWN. CLOSELY SPACED INTERSECTIONS, AUXILIARY TURN LANES, TURN PROHIBITIONS, SHORT STREET LENGTHS, SHORT BLOCK LENGTHS, TRAFFIC SIGNALS, THE PRESENCE OF HIGH VOLUME COMMERCIAL DRIVEWAYS, PARKING METERS AND VARIABLE STREET WIDTHS ARE URBAN CONDITIONS WHICH REQUIRE CAREFUL ATTENTION TO SITE SPECIFIC CONSTRUCTION SEQUENCE PHASING AND TRAFFIC CONTROL DEVICE APPLICATION.

IF PARKING METERS ARE WITHIN THE WORK ZONE OF A CONTRACT, THE CONTRACTOR SHALL CONTACT BALTIMORE CITY PARKING AUTHORITY TO ARRANGE FOR BAGGING OF PARKING METERS. EXISTING 'PARKING' SIGNS SHALL BE COVERED AND TEMPORARY 'NO PARKING ANYTIME' SIGNS SHALL BE INSTALLED WITHIN THE AFFECTED AREA. PARKING METER POLES SHALL NOT BE USED FOR TEMPORARY SIGNS. AT THE COMPLETION OF CONSTRUCTION, PARKING SIGNAGE AND METERS SHALL BE RESTORED TO THEIR PREVIOUS CONDITION.

AS PART OF TEMPORARY TRAFFIC CONTROL DESIGN INCLUDES A SPECIAL PROVISION CONTAINING ANY WORK RESTRICTIONS, SUCH AS DAYS THE CONTRACTOR MAY NOT WORK, DAYS DETOURS MAY NOT BE IMPLEMENTED, HOURS THAT LANE RESTRICTIONS ARE ALLOWED OR NOT ALLOWED, OR OTHER RESTRAINTS THAT MUST BE CONSIDERED BASED ON TRAFFIC VOLUMES OR OTHER CONSIDERATIONS. THE PREPARER OF THE TRAFFIC CONTROL PLAN SHALL CONTACT THE BALTIMORE CITY TRAFFIC ENGINEERS' OFFICE TO OBTAIN THIS INFORMATION. THE SPECIAL PROVISION SHALL BE PART OF THE PROJECT BOOKLET.

TEMPORARY TRAFFIC SIGNAL MODIFICATION(S) WILL BE COORDINATED THROUGH THE BALTIMORE CITY TRAFFIC ENGINEERS' OFFICE.

THE CONTRACTOR WILL BE SOLELY RESPONSIBLE FOR ALL ACCIDENTS OR DAMAGE TO PERSONS AND ANY PROPERTY DAMAGE RESULTING FROM HIS OPERATIONS.

NO MATERIALS OR EQUIPMENT SHALL BE STORED ON THE ROADWAY SURFACE OR SIDEWALK DURING NON-WORKING PERIODS. ALL STORED MATERIALS AND EQUIPMENT SHALL BE SET BACK AT LEAST SIX (6) FEET BEHIND THE CURB ALONG A CLOSED SECTION ROADWAY AND AT LEAST TWELVE (12) FEET FROM THE EDGE OF AN OPEN SECTION ROADWAY. HAZARDOUS MATERIAL SHALL NOT BE STORED WITHIN THE PUBLIC RIGHT-OF-WAY.

ALL TEMPORARY TRAFFIC CONTROL DEVICES SHALL BE REMOVED AS SOON AS PRACTICAL WHEN THEY ARE NO LONGER NEEDED. WHEN WORK IS SUSPENDED FOR SHORT PERIODS OF TIME, TEMPORARY TRAFFIC CONTROL DEVICES THAT ARE NO LONGER APPROPRIATE SHALL BE REMOVED OR COVERED.

IN UTILIZING THESE GUIDELINES ANY QUESTIONS ABOUT INTERPRETATIONS OR DETAIL APPLICATIONS SHALL BE REFERRED TO BALTIMORE CITY TRAFFIC ENGINEER OR OTHER RESPONSIBLE PARTY WHO HAS EXPERTISE IN TRAFFIC ENGINEERING AND HAS JURISDICTION ON THE AFFECTED STREETS.

CITY OF BALTIMORE 1797	APPROVED: Frank M. Murphy DEPUTY DIRECTOR - OPERATIONS Khalil Zaied DIRECTOR, DEPARTMENT OF TRANSPORTATION	CITY OF BALTIMORE DEPARTMENT OF TRANSPORTATION TRAFFIC DIVISION	ISSUED	REVISED	REVISED
			8 / 2010		
		GUIDELINES FOR TEMPORARY TRAFFIC CONTROL	STANDARD NO. BC 104.01-1		
			SCALE : NONE	SHEET 1 OF 7	

TEMPORARY TRAFFIC CONTROL PLAN (TTCP) PREPARATION AND REQUIREMENTS

PERSONS RESPONSIBLE FOR THE DEVELOPMENT AND IMPLEMENTATION OF WORK ZONE TTCP SHALL BE CERTIFIED BY THE MARYLAND STATE HIGHWAY ADMINISTRATION, OFFICE OF TRAFFIC AND SAFETY AS HAVING COMPLETED AND PASSED THE TEMPORARY TRAFFIC CONTROL MANAGERS TRAINING COURSE.

SPECIFIC DRAWING SCALES ARE REQUIRED TO ADEQUATELY SHOW THE LOCATIONS OF ADVANCE CONSTRUCTION SIGNS, THE DIMENSIONS FOR THE PLACEMENT OF CHANNELIZING DEVICES AND PAVEMENT MARKINGS, OR OTHER PHASES OF CONSTRUCTION AS REQUIRED. ACCEPTABLE SCALES ARE 1"=20', 1"=30' AND 1"=40'.

IT IS EXPECTED THAT A LOGICAL, PRACTICAL SEQUENCE WILL BE PRESENTED.THIS SEQUENCE SHOULD BE BASED ON REALISTIC AND UP TO DATE CONSTRUCTION PRACTICES AND METHODS. IMPACTS OF UTILITY RELOCATION, PEDESTRIAN MOVEMENTS, TRAFFIC DELAYS, DETOURS, ROADWAY STABILITY, CAPACITY RESTRICTIONS, MINIMUM LANE WIDTHS AND SAFETY MUST BE CONSIDERED ALONG WITH ANY OTHER SITE SPECIFIC CONDITIONS THAT MAY AFFECT WORK ZONE TRAFFIC CONTROL. EACH PHASE OF CONSTRUCTION, INCLUDING THE FOLLOW UP RESTORATION OPERATIONS, SHALL BE PROVIDED WITH APPROPRIATE WORK ZONE TRAFFIC CONTROLS.

FIELD CHECKS OF THE CONSTRUCTION SITE ARE RECOMMENDED PRIOR TO AND DURING THE PREPARATION OF A TEMPORARY TRAFFIC CONTROL PLAN. SPECIFIC SIGN MESSAGES, SIGN SIZES, TAPER LENGTHS, BARRICADE OR TRAFFIC DRUM SPACING, TYPES OF BARRICADES, TYPICALS FOR BARRIER CONNECTIONS, ETC, MUST BE SITE SPECIFIC AND SHOWN ON THE TTCP DRAWINGS. ALSO, IT MUST BE RECOGNIZED THAT MANY OF THE NECESSARY TRAFFIC CONTROL DEVICES ARE LOCATED IN ADVANCE OF THE CONSTRUCTION LIMITS OF A PROJECT.

EACH PROJECT SHALL HAVE SITE / JOB SPECIFIC SET OF GENERAL NOTES AND A DETAILED SEQUENCE OF CONSTRUCTION FOR EACH PHASE OF THE WORK. THIS INFORMATION SHALL APPEAR AT THE BEGINNING OF THE TEMPORARY TRAFFIC CONTROL DRAWINGS.

ALL EXISTING TRAFFIC CONTROL DEVICES (I.E. SIGNS, MARKING, ETC.) THAT MUST BE REMOVED SHALL BE REPLACED IN THEIR PROPER LOCATION PRIOR TO THE COMPLETION OF THE PROJECT. COST OF THE REPLACEMENT AND / OR REPAIR OF DEVICES DAMAGED AS A RESULT OF THE PROJECT SHALL BE ASSESSED TO THE CONTRACTOR.

WORK WITHIN THE TRAVELED PORTION OF ROADWAYS SHALL GENERALLY BE RESTRICTED TO THE HOURS OF 9:00 AM TO 3:30 PM, MONDAY THROUGH FRIDAY, UNLESS OTHERWISE NOTED IN THE CONTRACT DOCUMENTS. WORK OVERNIGHT OR ON HOLIDAYS AND WEEKENDS SHALL NOT OCCUR UNLESS AN EXCEPTION IS GRANTED IN WRITING BY BALTIMORE CITY.

CONSTRUCTION ACTIVITY, LOADING OR UNLOADING OF EQUIPMENT SHALL NOT BLOCK ANY TRAFFIC LANE OTHER THAN THOSE DELINEATED WITHIN THE WORK ZONE.

EXCLUSIVE OF EMERGENCY WORK, THE CONTRACTOR SHALL CONTACT OCCUPANTS OF ALL ADJOINING PROPERTIES AND INFORM THEM OF THE SCOPE AND THE TIMING OF CONSTRUCTION. A MINIMUM OF 24 HOURS NOTIFICATION SHALL BE REQUIRED PRIOR TO THE COMMENCEMENT OF ANY ACTIVITY.

ACCESS SHALL BE MAINTAINED TO ALL DRIVEWAYS UNLESS PERMISSION FOR CLOSURE IS GRANTED BY THE PROPERTY OWNER / MANAGER. HOWEVER, ACCESSIBILITY FOR EMERGENCY VEHICLES SHALL BE MAINTAINED AT ALL TIMES.

UNLESS OTHERWISE SPECIFIED ON THE TTCP OR IN THE CONTRACT DOCUMENTS AT LEAST ONE 10-FOOT TRAVEL LANE SHALL BE AVAILABLE FOR TRAFFIC AT ALL TIMES.

TEMPORARY TRAFFIC CONTROL DEVICES (SIGNS, TRAFFIC DRUMS AND CONES, ARROW PANELS, ETC.) SHALL BE PLACED IN ACCORDANCE WITH THE SPACING REQUIREMENTS OF BC 104.01-4. WORK AREA AHEAD (W20-1 MODIFIED) SIGNS MUST BE INSTALLED AT THE END OF EACH WORKDAY WHEN TEMPORARY AGGREGATE RAMPING IS IMPLEMENTED. CHANNELIZING DEVICES SHALL BE PLACED ADJACENT TO EXCAVATIONS AT TEN (10) FOOT INTERVALS. ARROW PANELS (FLASHING MODE ONLY) SHALL BE USED AT THE BEGINNING OF ANY LANE CLOSURE ON A MULTI-LANE ROADWAY. FOR MERGING, SHIFTING, AND SHOULDERS TAPERS, THE MAXIMUM SPACING BETWEEN DEVICES EQUALS THE POSTED SPEED IN FEET.

ALL WARNING SIGNS, UNLESS OTHERWISE SPECIFIED, SHALL BE A MINIMUM OF 48" X 48", BLACK SYMBOL OR LEGEND ON ORANGE BACKGROUND AND DIAMOND SHAPED. ALL WARNING SIGNS NOT APPLICABLE TO THE ACTUAL SITUATION SHALL BE REMOVED OR COVERED DURING NON-APPLICABLE PERIODS. ALL PORTABLE SIGNS SHALL BE MOUNTED A MINIMUM OF ONE (1) FOOT ABOVE THE LEVEL OF THE ROADWAY, WITH HIGHER MOUNTING HEIGHTS DESIRABLE. ALL SPECIAL TRAFFIC SIGNS (NON-STANDARD MUTCD SIGNS) MUST BE DESIGNED. DESIGN DETAILS REQUIRED ARE TYPICAL OF THOSE SHOWN IN THE MUTCD SUPPLEMENT STANDARD HIGHWAY SIGNS. IF ANY TRAFFIC CONTROL SIGNS ARE TO BE PLACED ALONG MDSHA ROADWAY WITHIN THE CITY LIMITS, THE CONTRACTOR SHALL NOTIFY THE BALTIMORE CITY TRAFFIC ENGINEER OF SIGNAGE TO BE INSTALLED.

CITY OF BALTIMORE 1797	APPROVED: Frank Murphy DEPUTY DIRECTOR - OPERATIONS Khalil Zaied DIRECTOR, DEPARTMENT OF TRANSPORTATION	CITY OF BALTIMORE DEPARTMENT OF TRANSPORTATION TRAFFIC DIVISION	ISSUED	REVISED	REVISED
			8 / 2010		
		TEMPORARY TRAFFIC CONTROL PLAN (TTCP) PREPARATION AND REQUIREMENTS	STANDARD NO. BC 104.01-2		
			SCALE : NONE	SHEET 2 OF 7	

TEMPORARY TRAFFIC CONTROL PLAN (TTCP) PREPARATION AND REQUIREMENTS (CONTINUED)

PAVEMENT MARKING CHANGES MUST BE SPECIFIC WITH RESPECT TO CROSSWALKS, LANE WIDTHS, EDGE LINE WIDTHS, STOP LINE WIDTHS, LANE LINE WIDTHS AND LOCATIONS, COLOR OF LINES, LENGTHS OF SOLID LINES, TAPER LENGTHS, LENGTH OF LINE REMOVALS, PLACEMENT OF ARROWS AND ONLY'S, AND OTHER DIMENSIONS NECESSARY TO ASSURE THE PROPER INSTALLATION OF THE PAVEMENT MARKINGS. IN ADDITION, IF TEMPORARY PAVEMENT MARKINGS ARE TO BE REMOVED RATHER THAN PAVED OVER, THE USE OF REMOVABLE PREFORMED PAVEMENT MARKINGS MUST BE SPECIFIED ON THE DRAWINGS. THE TTCP MUST SPECIFY THAT THE CONTRACTOR SHALL BE RESPONSIBLE FOR ALL PAVEMENT MARKING REMOVAL AND INSTALLATION.

WHEN PAVEMENT MARKINGS HAVE BEEN OBLITERATED BY THE WORK ACTIVITY, THE CONTRACTOR SHALL INSTALL ANY CRITICAL INTERIM PAVEMENT MARKINGS PRIOR TO THE END OF THE WORKDAY. ON STREET SECTIONS THAT ARE NOT SCHEDULED TO BE OVERLAID, ALL TEMPORARY PAVEMENT MARKINGS SHALL BE REMOVABLE PREFORMED PAVEMENT MARKINGS. ANY CONFLICTING MARKINGS, WHICH NEED TO BE TEMPORARILY REMOVED, ARE TO BE MASKED USING REMOVABLE BLACKOUT TAPE LINES.

FOR STREET SECTIONS THAT ARE TO BE OVERLAID, TEMPORARY MARKINGS CAN BE EITHER TAPE OR PAINT. EXISTING CONFLICTING MARKINGS SHOULD BE REMOVED WITH A PAVEMENT GRINDER.

DURING APPROVED NIGHTTIME OPERATIONS REFLECTORIZED TRAFFIC DRUMS SHOULD BE USED. HOWEVER, FOR EMERGENCY WORK ACTIVITIES WHERE TRAFFIC DRUMS ARE NOT READILY AVAILABLE, REFLECTORIZED TRAFFIC CONES THAT ARE A MINIMUM OF TWENTY EIGHT (28) INCHES IN HEIGHT AND HAVING SIX (6) INCH AND FOUR (4) INCH REFLECTIVE COLLARS WITHIN THE TOP SIXTEEN (16) INCHES OF THE CONE MAY BE USED. ALL WORK AREAS LEFT UNATTENDED AT NIGHT SHALL BE DELINEATED WITH REFLECTORIZED TRAFFIC DRUMS.

WHEN TEMPORARY CONCRETE BARRIER (TCB) IS USED, REFLECTORIZED SIDE BARRIER MARKERS, 8" X 12" TOP BARRIER WALL MARKERS, AND APPROPRIATE END TREATMENTS/ATTENUATION ARE REQUIRED IN ACCORDANCE WITH THE LATEST STANDARDS.

NO STREET OR SIDEWALK CLOSURES ARE PERMITTED WITHOUT THE APPROVAL OF THE BALTIMORE CITY TRAFFIC ENGINEER

SIDEWALK CLOSURES SHALL BE LIMITED TO OCCUR ONLY DURING THE CONSTRUCTION ACTIVITY. DURING CLOSURE, SIDEWALKS SHALL BE BARRICADED TO PHYSICALLY PREVENT PEDESTRIAN PASSAGE AND APPROPRIATE PEDESTRIAN DETOURS SHALL BE POSTED. DURING ALL OTHER TIMES, PROVISIONS FOR SAFE PEDESTRIAN ACCESS THROUGH THE WORK AREA VIA A TEMPORARY WALKWAY SHALL BE PROVIDED.

TABLE 1

GUIDELINES FOR SIGN SPACING

SPEED M.P.H.	MINIMUM DISTANCE FROM TAPER TO FIRST SIGN	ADDITIONAL SIGNS IN SERIES TO BE SPACED AT A MINIMUM			MINIMUM COMBINED ADVANCED WARNING
	A	B	C	D	
25-30	200'	200'	200'		600'
30-35	300'	300'	300'		900'
40-45	500'	500'	500'		1500'
45-65	800'	700'	1100'	2600' (OPTIONAL)	2600'

EXAMPLE: TWO LANES, ONE-WAY ROADWAY

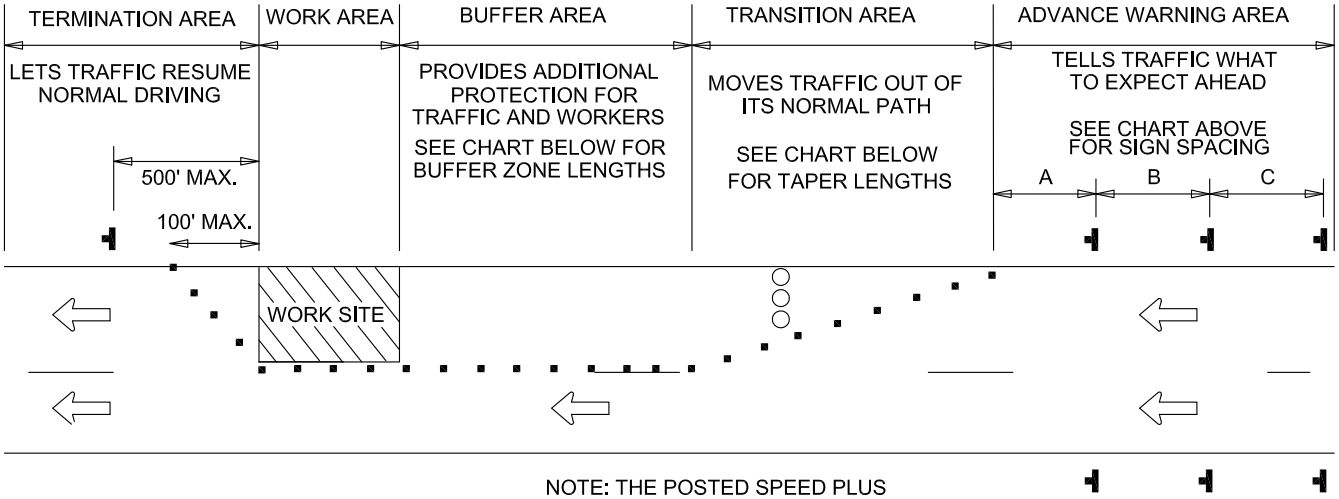

NOTE: THE POSTED SPEED PLUS
10 MPH SHOULD BE USED FOR THE DESIGN
OF SIGN SPACING, TAPER AND BUFFER LENGTHS

TABLE 2

GUIDELINES FOR TAPER LENGTHS

SPEED M.P.H.	TAPER LENGTH LANE WIDTH IN FT. 10	11	12	NUMBER OF DEVICES FOR TAPER	SPACING OF DEVICES ALONG TAPER IN FEET
20	70	75	80	5	20
25	105	115	125	6	25
30	150	165	180	7	30
35	205	225	245	8	35
40	270	295	320	9	40
45	450	495	540	13	45
50	500	550	600	13	50
55	550	605	660	13	55
60	600	660	720	13	60
65	650	715	780	13	65

$L = WS^2/60$ FOR SPEEDS EQUAL TO OR LESS THAN (<) 40 MPH

WHERE: L = MINIMUM LENGTH OF TAPER (FT.)

S = NUMERICAL VALUE OF PREVAILING TRAVEL SPEED OR SPEED LIMIT (MPH), WHICHEVER IS HIGHER, PRIOR TO WORK STARTING.

W = WIDTH OF OFFSET (FT.)

TABLE 3

GUIDELINES FOR BUFFER ZONE LENGTHS

SPEED (MPH)	LENGTH (FEET)
20	35
25	55
30	85
35	120
40	170
45	220
50	280
55	335
60	415
65	485

NOTES:

LENGTHS IN TABLE 2 ARE MINIMUM TAPER LENGTHS REQUIRED FOR MERGING TRAVEL LANES (MERGING TAPERS). WHEN SHIFTING TRAVEL LANES (SHIFTING TAPER) AND CONDITIONS DO NOT PERMIT USE OF THE LENGTHS IN TABLE 2, LENGTHS EQUAL TO ONE-HALF THOSE IN TABLE 2 MAY BE USED.

MERGING TAPERS SHALL BE A MINIMUM 1,000 FEET ON EXPRESSWAYS AND FREEWAYS UNLESS OTHERWISE DIRECTED BY THE ENGINEER.

WHEN USED, ARROW PANELS SHOULD BE PLACED ON THE SHOULDER AT THE BEGINNING OF THE TAPER. WHERE NO SHOULDER EXISTS, ARROW PANELS SHOULDER BE PLACED WITHIN THE TAPER AS CLOSE TO THE BEGINNING OF THE TAPER AS POSSIBLE.

APPROVED :

Frank Murphy
DEPUTY DIRECTOR - OPERATIONS

Khalil Zaied
DIRECTOR, DEPARTMENT OF TRANSPORTATION

CITY OF BALTIMORE
DEPARTMENT OF TRANSPORTATION
TRAFFIC DIVISION

ISSUED	REVISED	REVISED
8 / 2010		

SIGN SPACING, TAPER AND BUFFER LENGTHS CRITERIA

STANDARD NO.
BC 104.01-4

SCALE : NONE

NOTES:

1. REFER TO BC 104.01-4 FOR TAPER LENGTHS.
2. PVMS MESSAGES AND PLACEMENT OF THIS DEVICE SHALL BE APPROVED BY THE BALTIMORE CITY TRAFFIC ENGINEER.
3. THE EDGE OF THE SIGN BOARD OF THE PVMS SHALL BE PLACED A MINIMUM OF 3' AND NO MORE THAN 8' FROM EDGE LINE.
4. PMVS SHOULD BE INSTALLED BEHIND TRAFFIC BARRIER WHERE POSSIBLE.

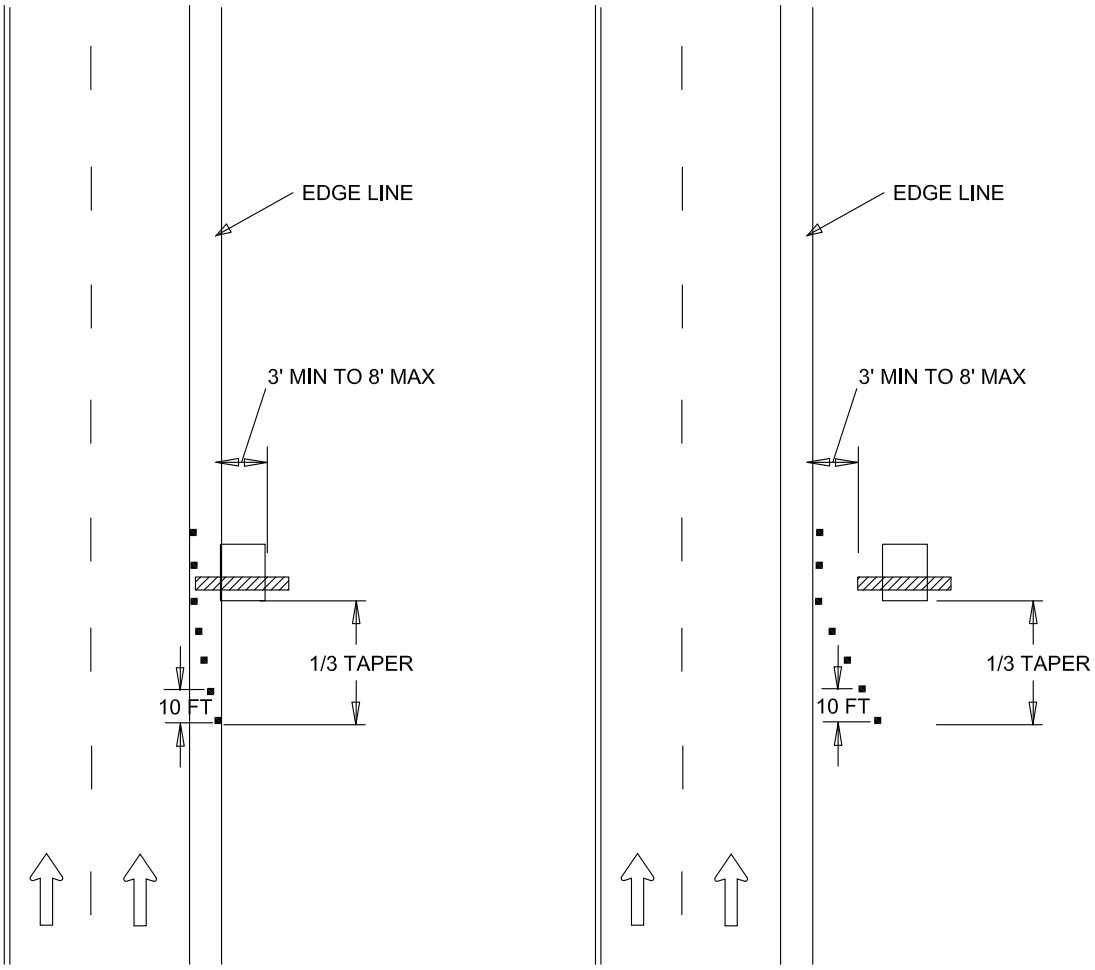

ON THE SHOULDER

OFF THE SHOULDER

LEGEND

DIRECTION OF TRAFFIC

PORTABLE VARIABLE MESSAGE SIGN (PVMS)

CHANNELIZATION DEVICES

APPROVED :

Frank Murphy

DEPUTY DIRECTOR - OPERATIONS

Khalil Zaied

DIRECTOR, DEPARTMENT OF TRANSPORTATION

CITY OF BALTIMORE
DEPARTMENT OF TRANSPORTATION
TRAFFIC DIVISION

ISSUED	REVISED	REVISED
8 / 2010		

PORTABLE VARIABLE MESSAGE SIGN PLACEMENT

STANDARD NO.
BC 104.01-5

SCALE : NONE

SHEET 5 OF 7

TEMPORARY TRAFFIC CONTROL TYPICAL APPLICATION

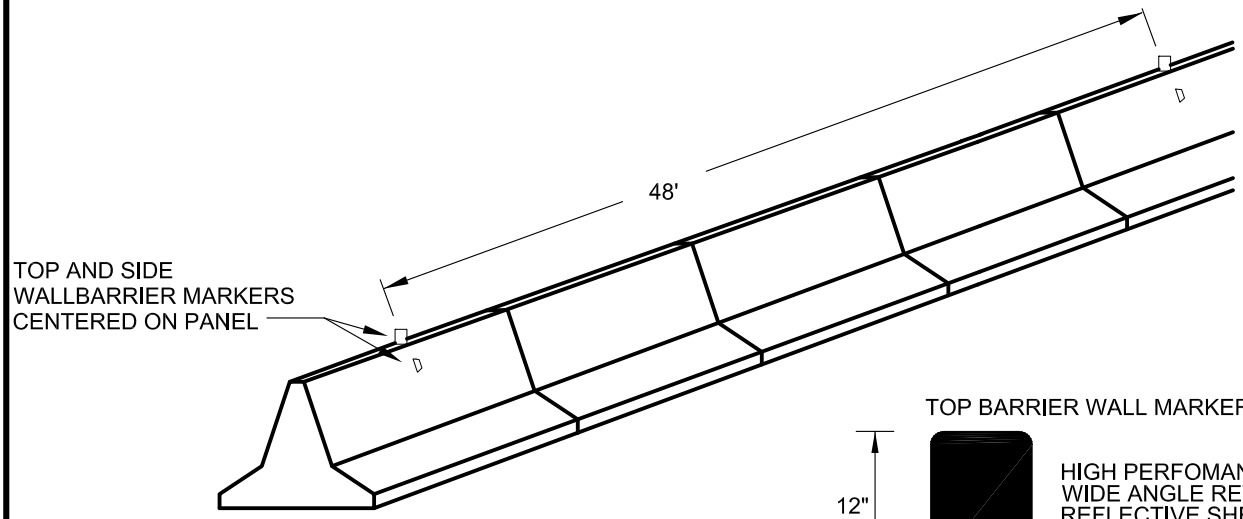

TOP BARRIER WALL MARKER

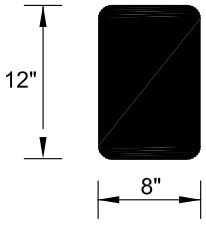

HIGH PERFOMANCE
WIDE ANGLE RETRO-
REFLECTIVE SHEETING
FLUORESCENT ORANGE

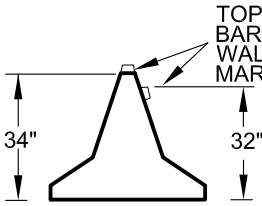

JERSEY SHAPE
FRONT VIEW

NOTES:
FOR BIFURCATED JERSEY BARRIER, MAINTAIN 32 INCH HEIGHT TO TOP OF SIDE MARKER JERSEY TYPE BARRIER TO BE USED FOR REPLACMENT PURPOSES ONLY

SIDE BARRIER WALL MARKER

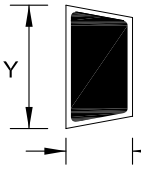

HIGH PERFOMANCE
WIDE ANGLE RETRO-
REFLECTIVE SHEETING
OR RETROREFLECTIVE
REFLECTORS

MINIMUM REFLECTIVE
AREA, 7.5 SQ. IN.

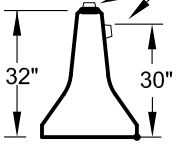

F SHAPE
FRONT VIEW

NOTE:
FOR BIFURCATED F-SHAPED BARRIER, MAINTAIN 30 INCH HEIGHT TO TOP OF SIDE MARKER

NOTES:

SIDE BARRIER MARKERS SHALL BE YELLOW IN COLOR WHEN PLACED ON MEDIAN-SIDE BARRIER (SEPARATING OPPOSING TRAFFIC). SHALL BE WHITE IN COLOR WHEN PLACED ON SHOULDER-SIDE BARRIER (OR BARRIER SEPARATING SAME DIRECTION TRAFFIC).

THE SPACINGS BETWEEN MARKERS ON CURVES/TURNS SHALL BE 48 FOOT (RADIAL).

THE BOTTOM OF THE TOP MARKER SHALL BE AT THE SAME ELEVATION AS THE TOP OF THE BARRIER.

NO ATTACHMENT METHOD MAY BLOCK ANY PART OF THE REFLECTIVE AREA OF THE MARKER.

BACKING FOR TOP MARKERS SHALL BE SHEET ALUMINUM, MEETING MATERIAL THICKNESS PER TEMPORARY TRAFFIC SIGNS SPECIFICATIONS OR ANY OTHER MATERIAL APPROVED BY SHA, OFFICE OF TRAFFIC AND SAFETY.

APPROVED :

Frank M Murphy

DEPUTY DIRECTOR - OPERATIONS

Khalil Zaied

DIRECTOR, DEPARTMENT OF TRANSPORTATION

CITY OF BALTIMORE
DEPARTMENT OF TRANSPORTATION
TRAFFIC DIVISION

ISSUED	REVISED	REVISED
8 / 2010		

BARRIER DELINEATION
BARRIER 4' OR CLOSER TO EDGE LINE

STANDARD NO.
BC 104.01-6

SCALE : NONE

SHEET 6 OF 7

TEMPORARY TRAFFIC CONTROL TYPICAL APPLICATION

NOTE:
SEE STANDARD NO. BC104.01-6
AND BC 104.10-3 FOR MARKER DETAIL.

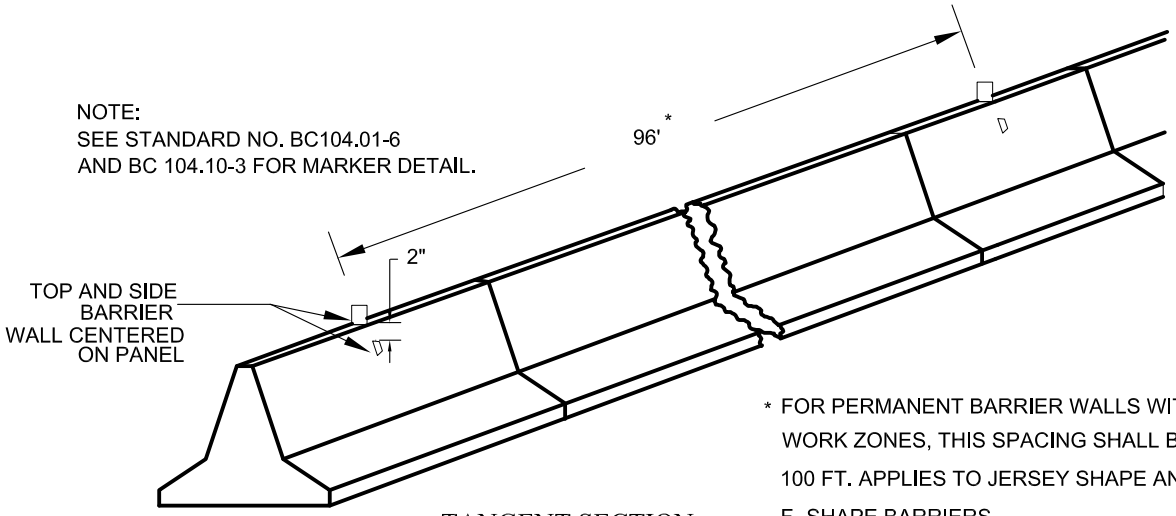

* FOR PERMANENT BARRIER WALLS WITHIN WORK ZONES, THIS SPACING SHALL BE 100 FT. APPLIES TO JERSEY SHAPE AND F- SHAPE BARRIERS

TANGENT SECTION

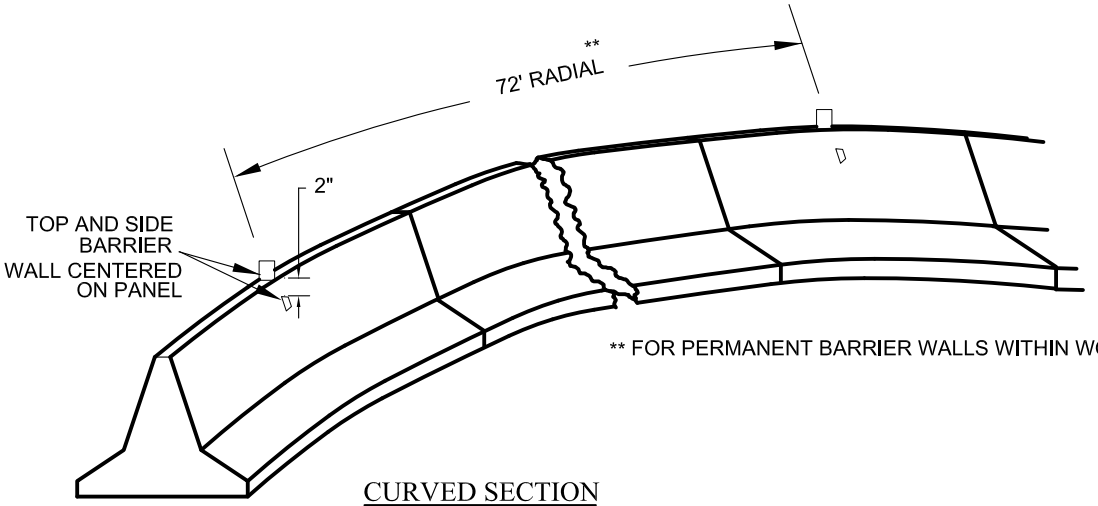

** FOR PERMANENT BARRIER WALLS WITHIN WORK ZONES

CURVED SECTION

APPROVED:

Frank Murphy

DEPUTY DIRECTOR - OPERATIONS

Khalil Zaied

DIRECTOR, DEPARTMENT OF TRANSPORTATION

CITY OF BALTIMORE
DEPARTMENT OF TRANSPORTATION
TRAFFIC DIVISION

ISSUED	REVISED	REVISED
8 / 2010		

BARRIER DELINEATION
BARRIER BETWEEN 4' AND 15'
FROM EDGE LINE

STANDARD NO.
BC 104.01-7

SCALE : NONE

SHEET 7 OF 7

TEMPORARY TRAFFIC CONTROL TYPICAL APPLICATION

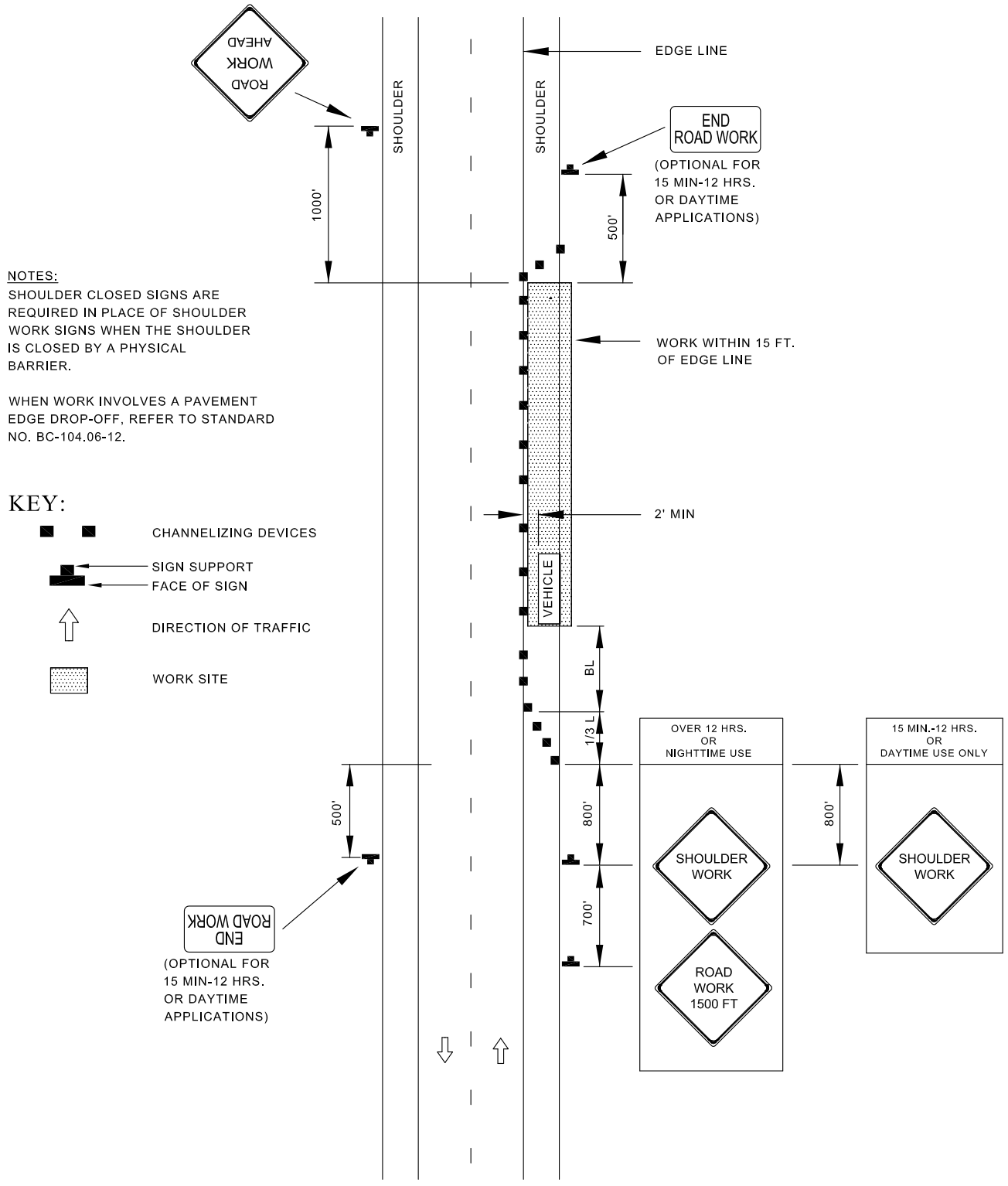

NOTES:
SHOULDER CLOSED SIGNS ARE REQUIRED IN PLACE OF SHOULDER WORK SIGNS WHEN THE SHOULDER IS CLOSED BY A PHYSICAL BARRIER.

WHEN WORK INVOLVES A PAVEMENT EDGE DROP-OFF, REFER TO STANDARD NO. BC-104.06-12.

KEY:

- CHANNELIZING DEVICES
- SIGN SUPPORT
- FACE OF SIGN
- DIRECTION OF TRAFFIC
- WORK SITE

APPROVED:
Frank Murphy
DEPUTY DIRECTOR - OPERATIONS
Khalil Zaied
DIRECTOR, DEPARTMENT OF TRANSPORTATION

CITY OF BALTIMORE
DEPARTMENT OF TRANSPORTATION
TRAFFIC DIVISION

ISSUED	REVISED	REVISED
8 / 2010		

SHOULDER WORK / 2 LANE, 2 WAY EQUAL OR LESS THAN 40 MPH

STANDARD NO. BC 104.02-2

SCALE : NONE

SHEET 1 OF 1

TEMPORARY TRAFFIC CONTROL TYPICAL APPLICATION

NOTES:

- THIS TYPICAL SHALL BE USED FOR ANY LANE SHIFT WHERE PREVAILING SPEEDS CANNOT BE MAINTAINED THROUGH THE SHIFT.
- FOR LANE SHIFTS WHICH DO NOT SATISFY ABOVE CONDITIONS:
  - ▸ DELETE "REVERSE CURVE" WARNING SIGNS, AND
  - ▸ REPLACE "LANE SHIFT" SIGNS WITH "ROAD WORK XXX" SIGNS OR OTHER APPROPRIATE SIGNS AS SHOWN IN TEMPORARY TRAFFIC CONTROL TYPICAL APPLICATIONS.

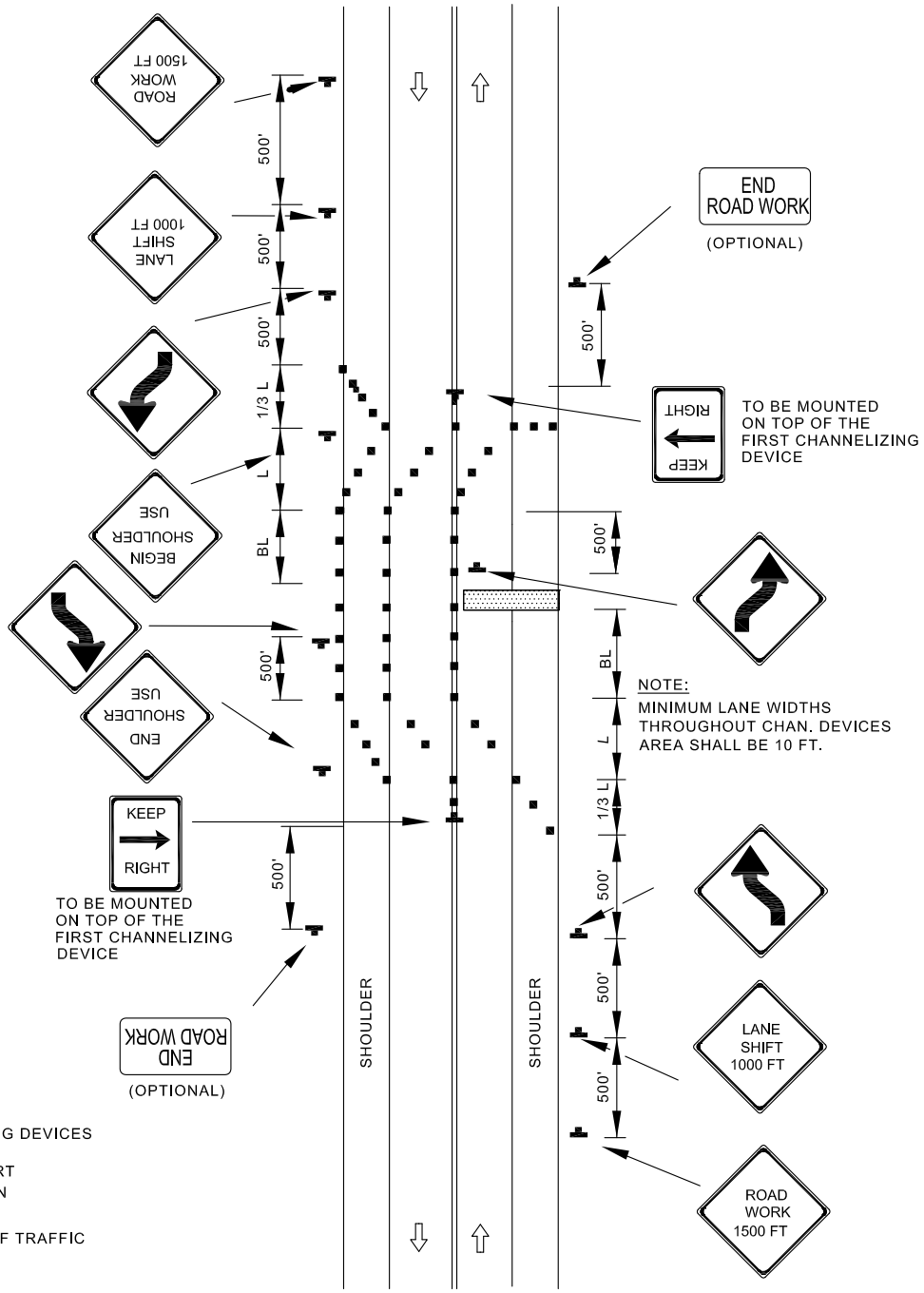

KEY:

- CHANNELIZING DEVICES
- SIGN SUPPORT
- FACE OF SIGN
- DIRECTION OF TRAFFIC
- WORK SITE

APPROVED:

Frank Murphy
DEPUTY DIRECTOR - OPERATIONS

Khalil Zaied
DIRECTOR, DEPARTMENT OF TRANSPORTATION

CITY OF BALTIMORE
DEPARTMENT OF TRANSPORTATION
TRAFFIC DIVISION

ISSUED	REVISED	REVISED
8 / 2010		

LANE SHIFT RIGHT OR LEFT SIDE / 2 LANE, 2-WAY EQUAL OR LESS THAN 40 MPH / 15 MIN.- 12 HRS. OR DAYTIME ONLY

STANDARD NO.
BC 104.02-4

SCALE : NONE

SHEET 1 OF 1

TEMPORARY TRAFFIC CONTROL TYPICAL APPLICATION

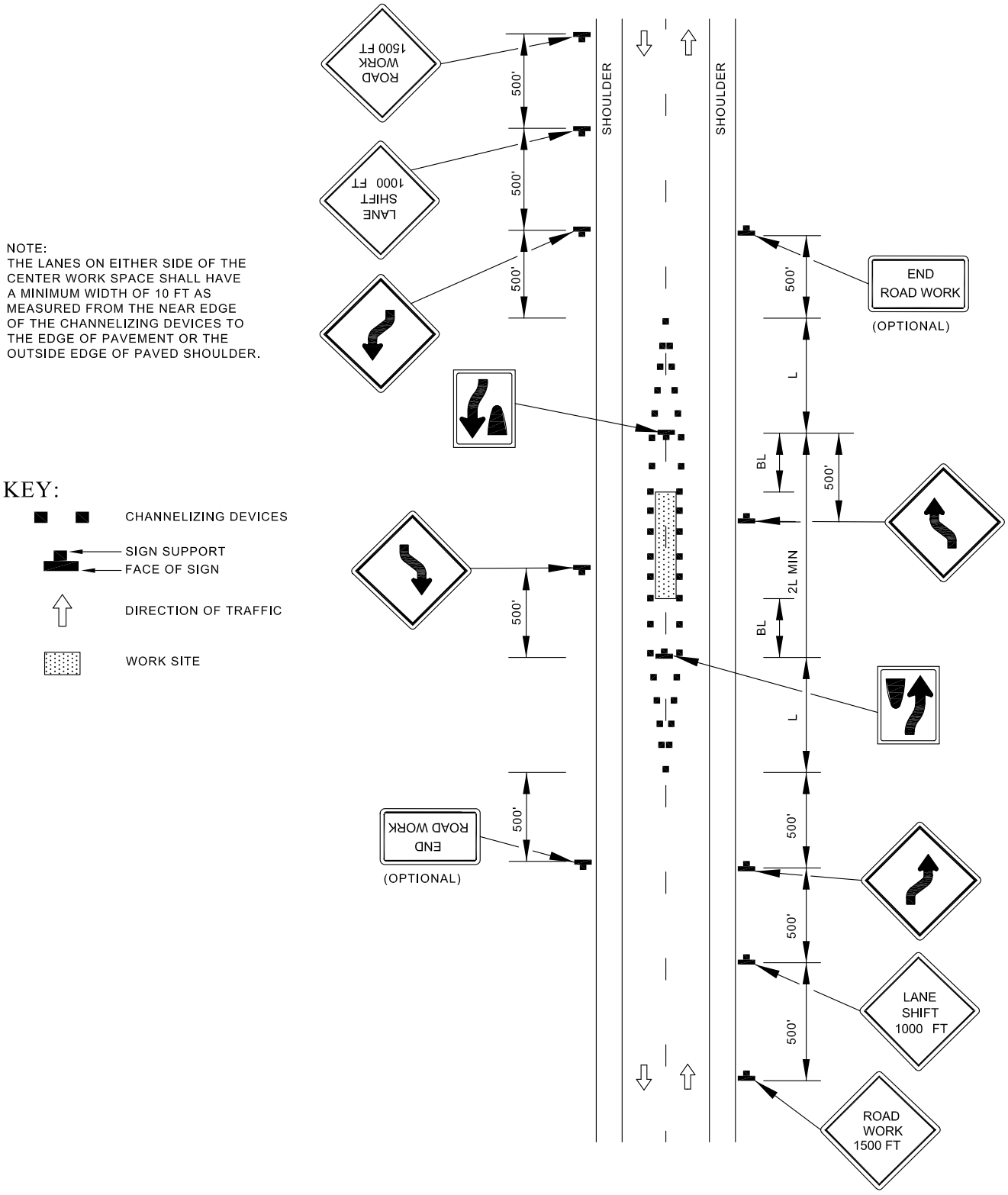

NOTE:
THE LANES ON EITHER SIDE OF THE CENTER WORK SPACE SHALL HAVE A MINIMUM WIDTH OF 10 FT AS MEASURED FROM THE NEAR EDGE OF THE CHANNELIZING DEVICES TO THE EDGE OF PAVEMENT OR THE OUTSIDE EDGE OF PAVED SHOULDER.

KEY:

- CHANNELIZING DEVICES
- SIGN SUPPORT
- FACE OF SIGN
- DIRECTION OF TRAFFIC
- WORK SITE

APPROVED:

Frank Murphy

DEPUTY DIRECTOR - OPERATIONS

Khalil Zaied

DIRECTOR, DEPARTMENT OF TRANSPORTATION

CITY OF BALTIMORE
DEPARTMENT OF TRANSPORTATION
TRAFFIC DIVISION

WORK IN CENTER OF LOW-VOLUME ROAD 2 LANE 2-WAY EQUAL / LESS THAN 40 MPH / 15 MIN.- 12 HRS. OR DAYTIME ONLY

ISSUED	REVISED	REVISED
8 / 2010		

STANDARD NO.
BC 104.02-6

SCALE : NONE

SHEET 1 OF 1

TEMPORARY TRAFFIC CONTROL TYPICAL APPLICATION

NOTES:

THE "BEGIN AND END SHOULDER USE" SIGNS SHOULD BE OMITTED WHEN THE SHOULDER CANNOT BE DIFFERENTIATED FROM THE NORMAL TRAVEL PATH.

- THIS TYPICAL SHALL BE USED FOR ANY LANE SHIFT WHERE PREVAILING SPEEDS CANNOT BE MAINTAINED THROUGH THE SHIFT.
- FOR LANE SHIFTS WHICH DO NOT SATISFY ABOVE CONDITIONS:
  - ▸ DELETE "REVERSE CURVE" WARNING SIGNS, AND
  - ▸ REPLACE "LANE SHIFT" SIGNS WITH "ROAD WORK XXX" SIGNS OR OTHER APPROPRIATE SIGNS AS SHOWN IN TEMPORARY TRAFFIC CONTROL TYPICAL APPLICATIONS.

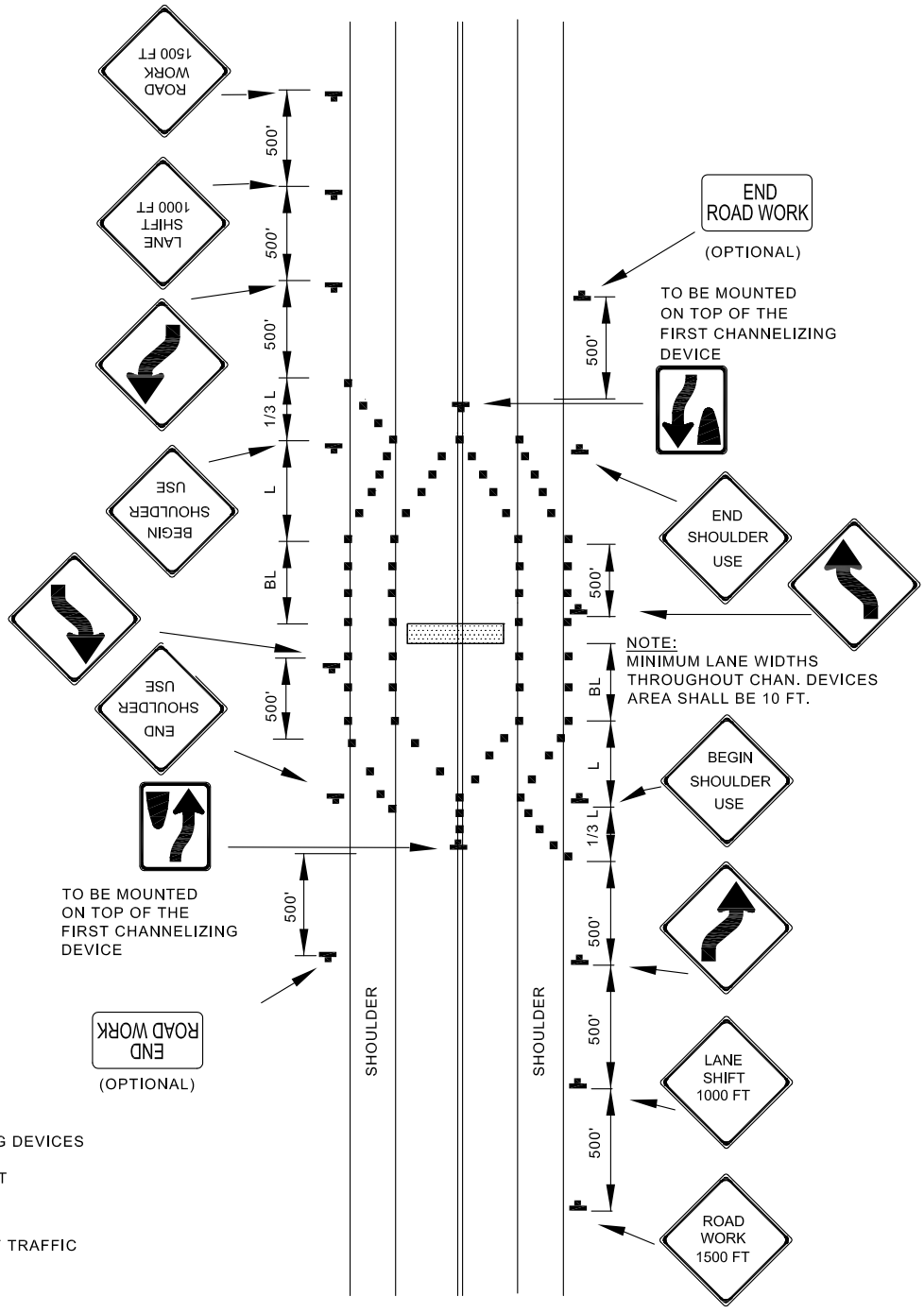

KEY:

- CHANNELIZING DEVICES
- SIGN SUPPORT
- FACE OF SIGN
- DIRECTION OF TRAFFIC
- WORK SITE

APPROVED:

Frank Murphy

DEPUTY DIRECTOR - OPERATIONS

Khalil Zaied

DIRECTOR, DEPARTMENT OF TRANSPORTATION

CITY OF BALTIMORE
DEPARTMENT OF TRANSPORTATION
TRAFFIC DIVISION

ISSUED	REVISED	REVISED
8 / 2010		

LANE SHIFT FOR COMPLETE TRAVEL WAY BLOCKAGE / 2 LANE 2-WAY EQL / LESS THAN 40 MPH / 15 MIN.- 12 HRS. OR DAYTIME ONLY

STANDARD NO.
BC 104.02-8

SCALE : NONE

SHEET 1 OF 1

TEMPORARY TRAFFIC CONTROL TYPICAL APPLICATION

NOTE:
FLAGGER SHALL NEVER BE STATIONED MORE THAN 1000' AWAY FROM THE ADVANCE FLAGGER SIGN.

KEY:

- CHANNELIZING DEVICES
- SIGN SUPPORT
- FACE OF SIGN
- DIRECTION OF TRAFFIC
- WORK SITE
- FLAGGER

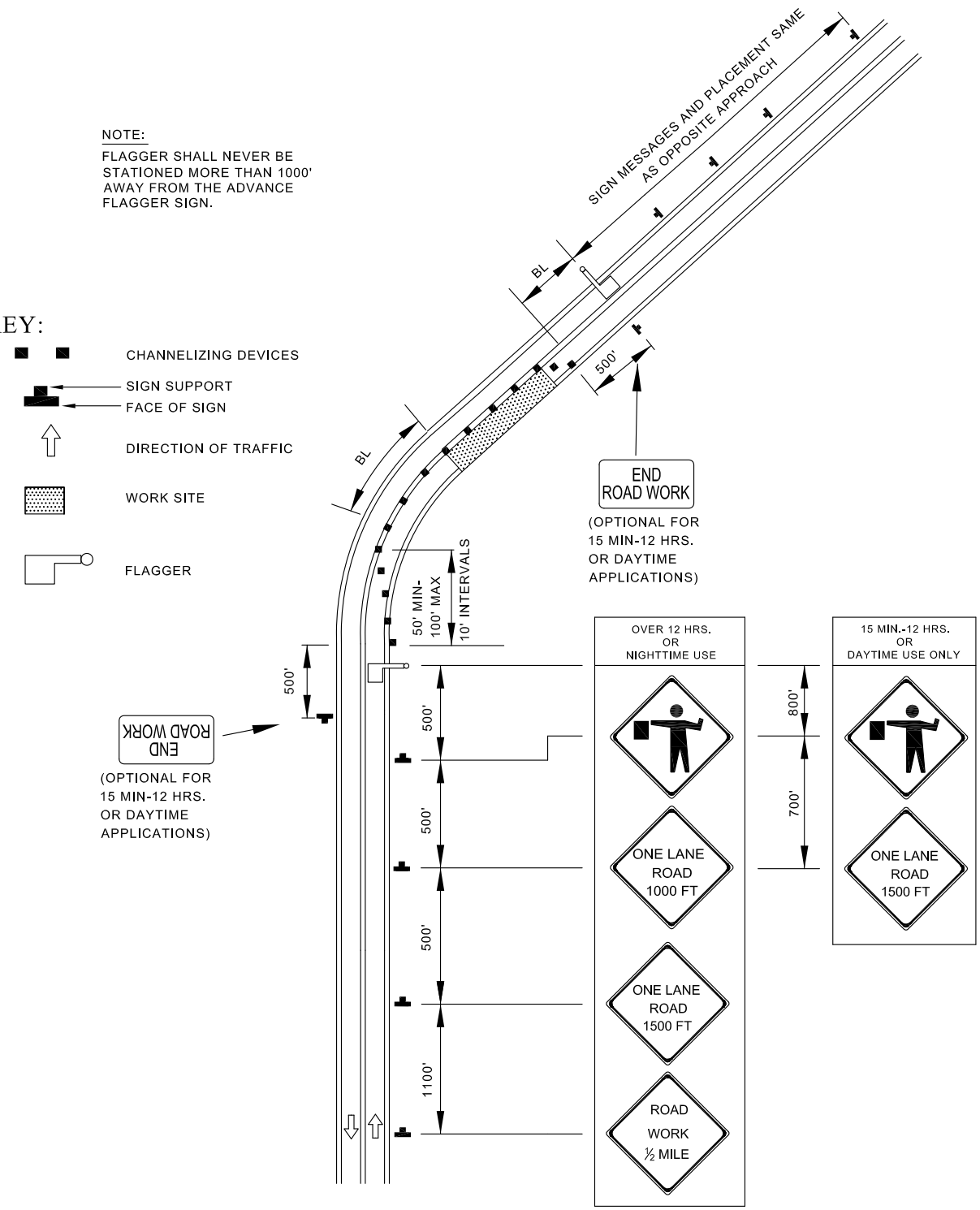

APPROVED:

Frank Murphy
DEPUTY DIRECTOR - OPERATIONS

Khalil Zaied
DIRECTOR, DEPARTMENT OF TRANSPORTATION

CITY OF BALTIMORE
DEPARTMENT OF TRANSPORTATION
TRAFFIC DIVISION

ISSUED	REVISED	REVISED
8 / 2010		

FLAGGING OPERATION / 2-LANE, 2-WAY EQUAL / LESS THAN 40 MPH

STANDARD NO. BC 104.02-10

SCALE : NONE

SHEET 1 OF 1

TEMPORARY TRAFFIC CONTROL TYPICAL APPLICATION

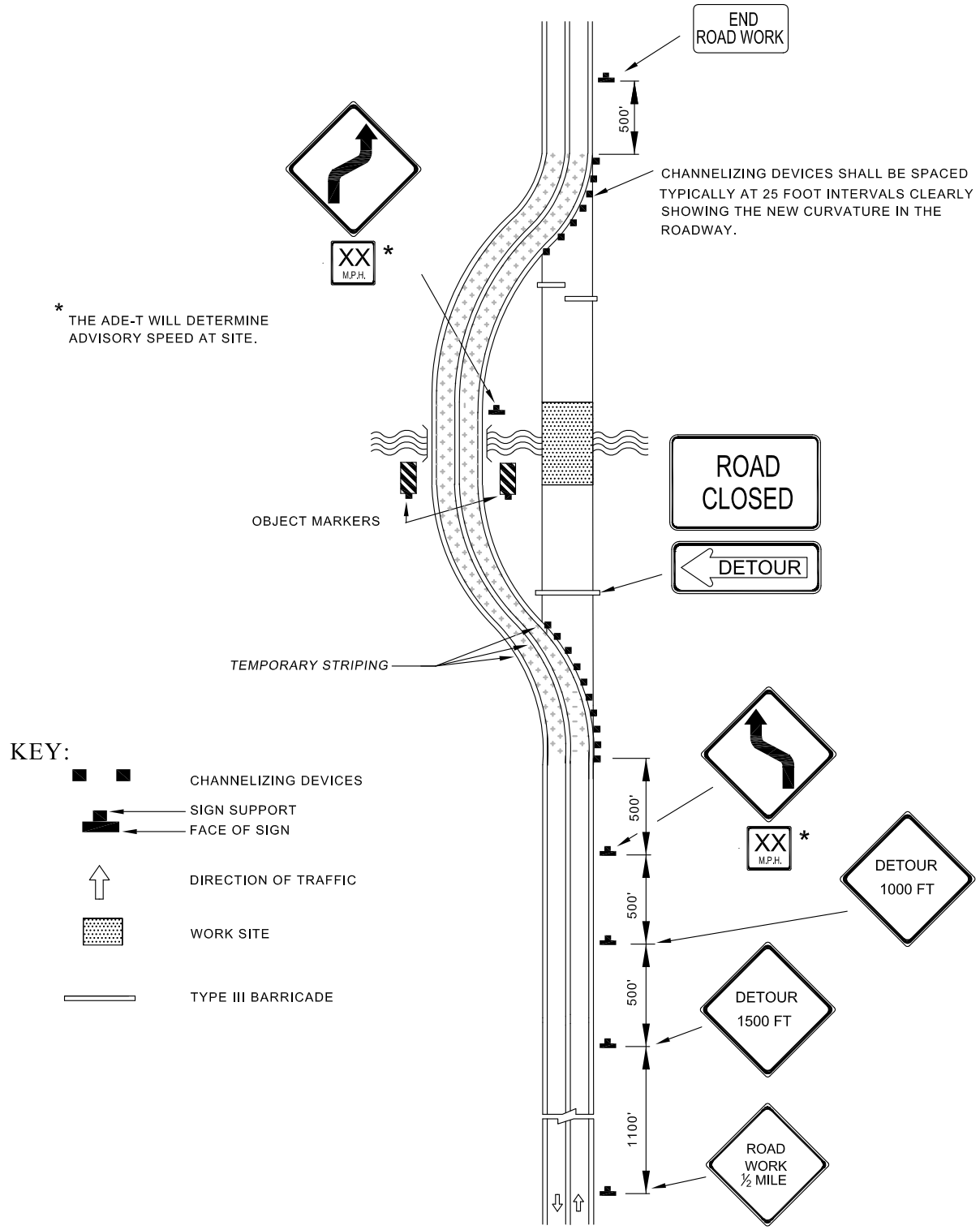

APPROVED:

Frank Murphy

DEPUTY DIRECTOR - OPERATIONS

Khalil Zaied

DIRECTOR, DEPARTMENT OF TRANSPORTATION

CITY OF BALTIMORE
DEPARTMENT OF TRANSPORTATION
TRAFFIC DIVISION

ISSUED	REVISED	REVISED
8 / 2010		

BYPASS DETOUR / 2-LANE, 2-WAY EQUAL / LESS THAN 40 MPH / OVER 12 HRS. OR NIGHTTIME USE

STANDARD NO.
BC 104.02-12

SCALE : NONE

SHEET 1 OF 1

TEMPORARY TRAFFIC CONTROL TYPICAL APPLICATION

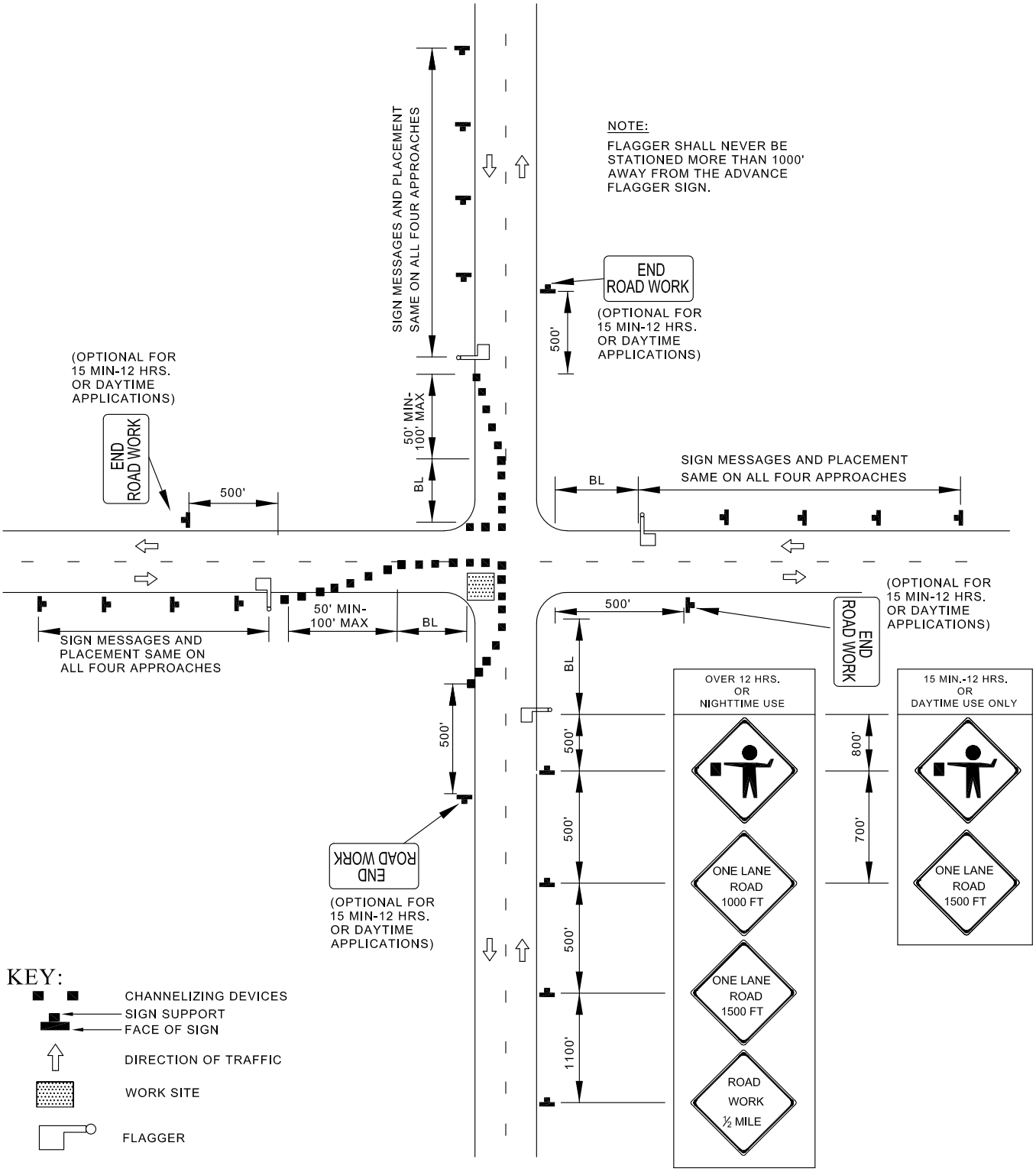

APPROVED:

Frank Murphy

DEPUTY DIRECTOR - OPERATIONS

Khalil Zaied

DIRECTOR, DEPARTMENT OF TRANSPORTATION

CITY OF BALTIMORE
DEPARTMENT OF TRANSPORTATION
TRAFFIC DIVISION

ISSUED	REVISED	REVISED
8 / 2010		

INTERSECTION FLAGGING OPERATION 2-LANE, 2-WAY EQUAL / LESS THAN 40 MPH

STANDARD NO.
BC 104.02-14

SCALE : NONE

SHEET 1 OF 1

TEMPORARY TRAFFIC CONTROL TYPICAL APPLICATION

NOTES:
SHOULDER CLOSED SIGNS ARE REQUIRED IN PLACE OF SHOULDER WORK SIGNS WHEN THE SHOULDER IS CLOSED BY A PHYSICAL BARRIER.

WHEN WORK INVOLVES A PAVEMENT EDGE DROP-OFF, REFER TO STANDARD NO. BC 104.06-12.

KEY:

- CHANNELIZING DEVICES
- SIGN SUPPORT
- FACE OF SIGN
- DIRECTION OF TRAFFIC
- WORK SITE

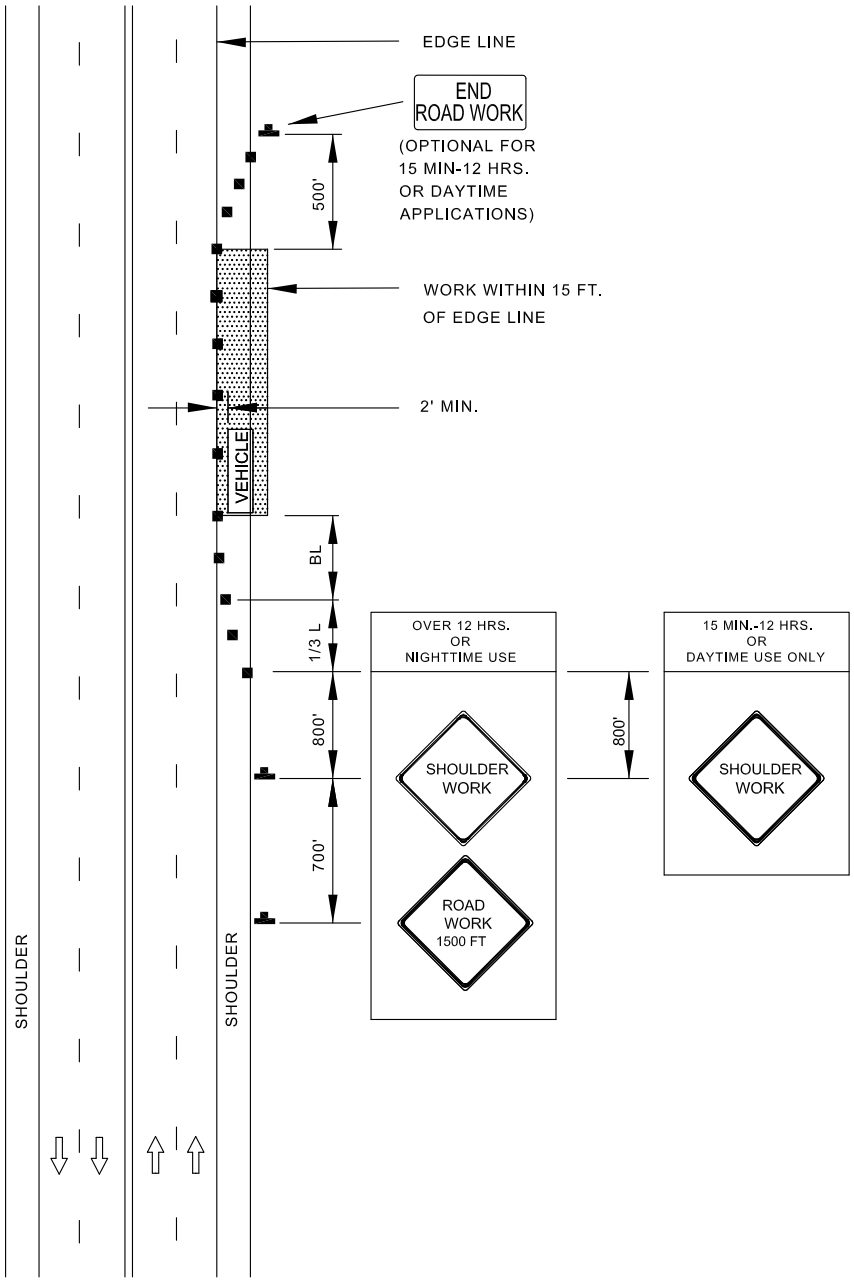

APPROVED:

Frank Murphy
DEPUTY DIRECTOR - OPERATIONS

Khalil Zaied
DIRECTOR, DEPARTMENT OF TRANSPORTATION

CITY OF BALTIMORE
DEPARTMENT OF TRANSPORTATION
TRAFFIC DIVISION

ISSUED	REVISED	REVISED
8 / 2010		

SHOULDER WORK / MULTILANE UNDIVIDED EQUAL / LESS THAN 40 MPH

STANDARD NO. BC 104.03-2

SCALE : NONE

SHEET 1 OF 1

TEMPORARY TRAFFIC CONTROL TYPICAL APPLICATION

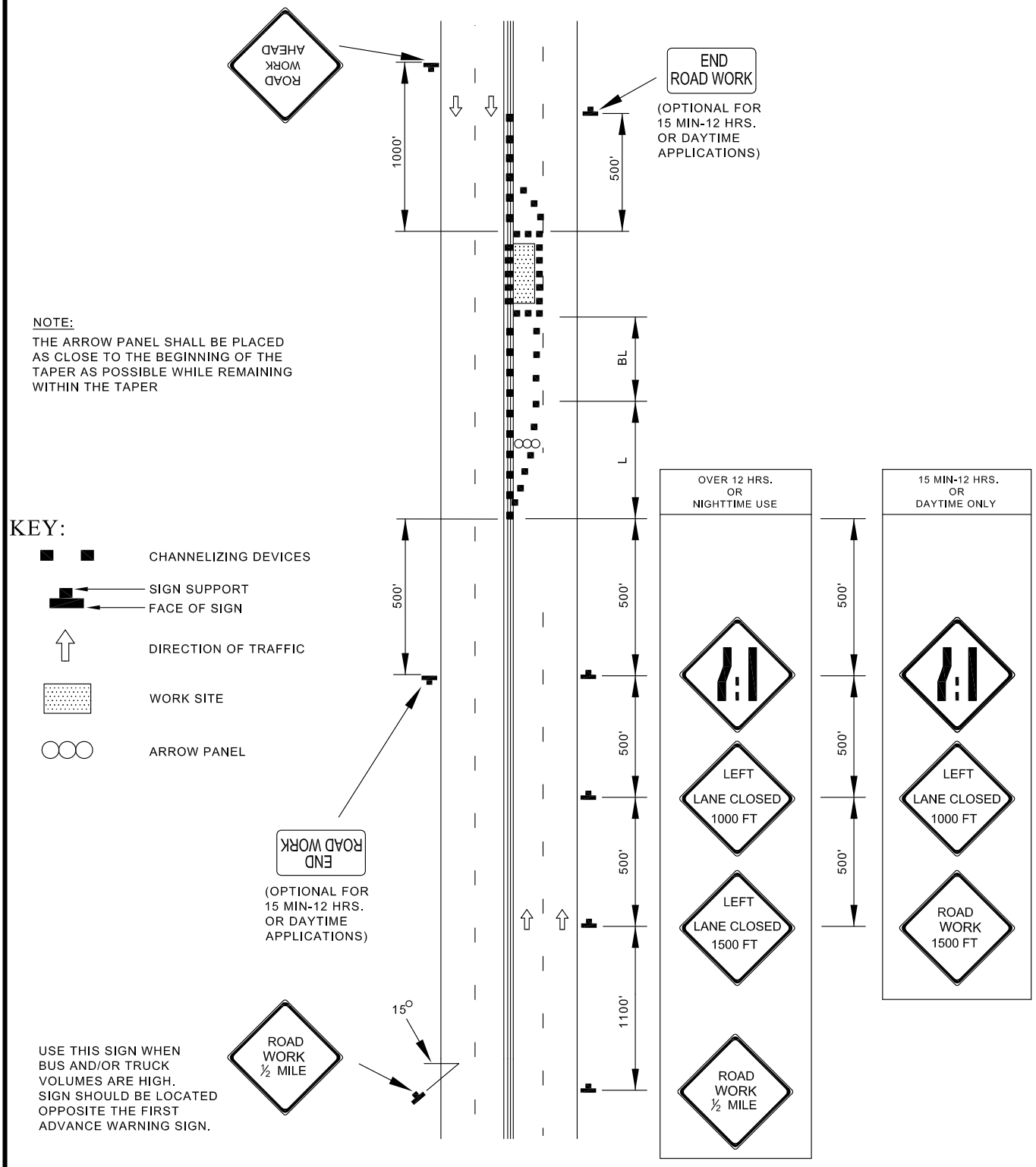

APPROVED:

Frank Murphy

DEPUTY DIRECTOR - OPERATIONS

Khalil Zaied

DIRECTOR, DEPARTMENT OF TRANSPORTATION

CITY OF BALTIMORE
DEPARTMENT OF TRANSPORTATION
TRAFFIC DIVISION

ISSUED	REVISED	REVISED
8 / 2010		

LEFT LANE CLOSURE / MULTILANE UNDIVIDED EQUAL / LESS THAN 40 MPH

STANDARD NO.
BC 104.03-4

SCALE : NONE

SHEET 1 OF 1

TEMPORARY TRAFFIC CONTROL TYPICAL APPLICATION

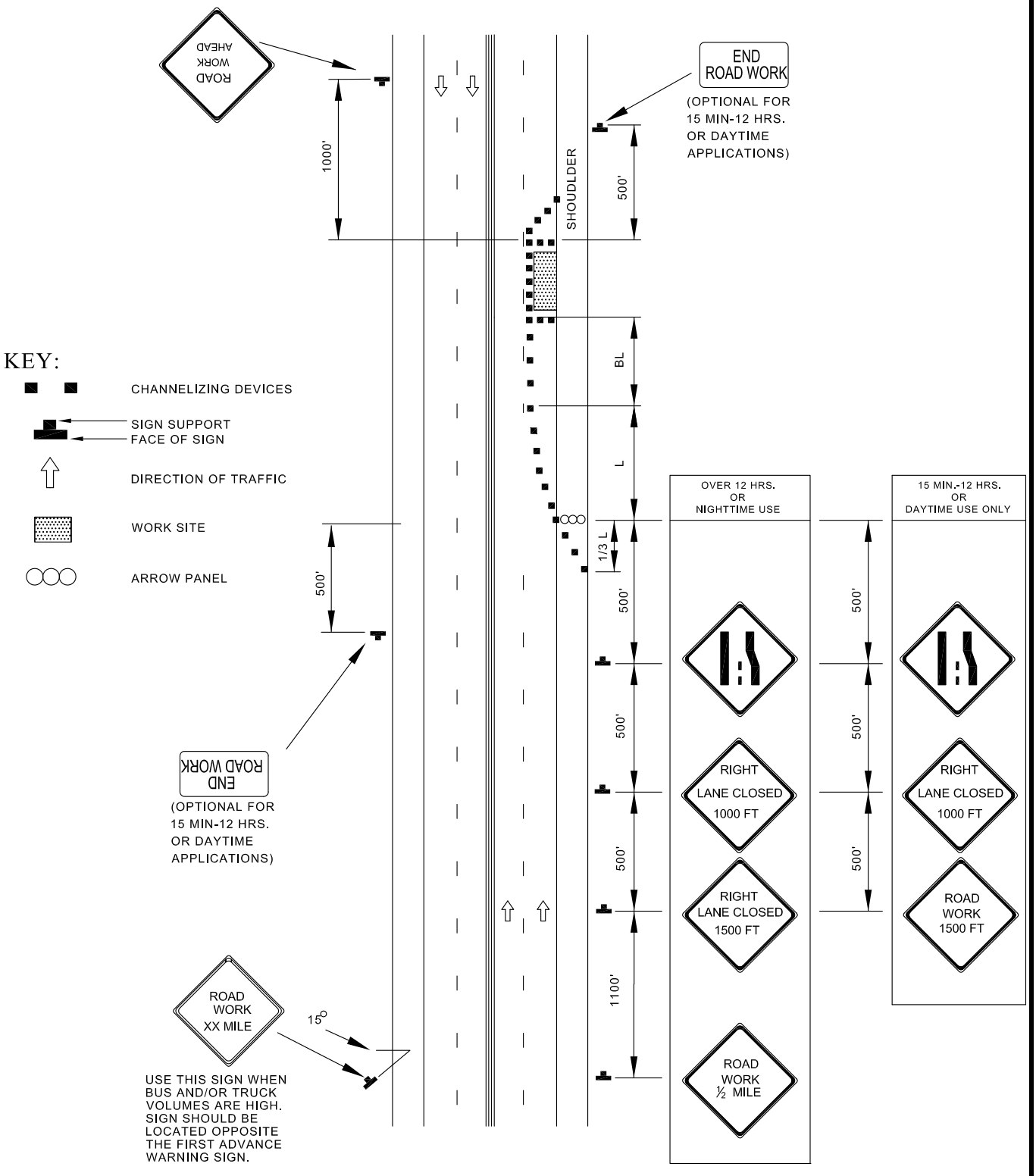

KEY:

- CHANNELIZING DEVICES
- SIGN SUPPORT / FACE OF SIGN
- DIRECTION OF TRAFFIC
- WORK SITE
- ARROW PANEL

APPROVED:

Frank Murphy

DEPUTY DIRECTOR - OPERATIONS

Khalil Zaied

DIRECTOR, DEPARTMENT OF TRANSPORTATION

CITY OF BALTIMORE
DEPARTMENT OF TRANSPORTATION
TRAFFIC DIVISION

ISSUED	REVISED	REVISED
8 / 2010		

RIGHT LANE CLOSURE / MULTILANE UNDIVIDED EQUAL / LESS THAN 40 MPH

STANDARD NO.
BC 104.03-6

SCALE : NONE

SHEET 1 OF 1

TEMPORARY TRAFFIC CONTROL TYPICAL APPLICATION

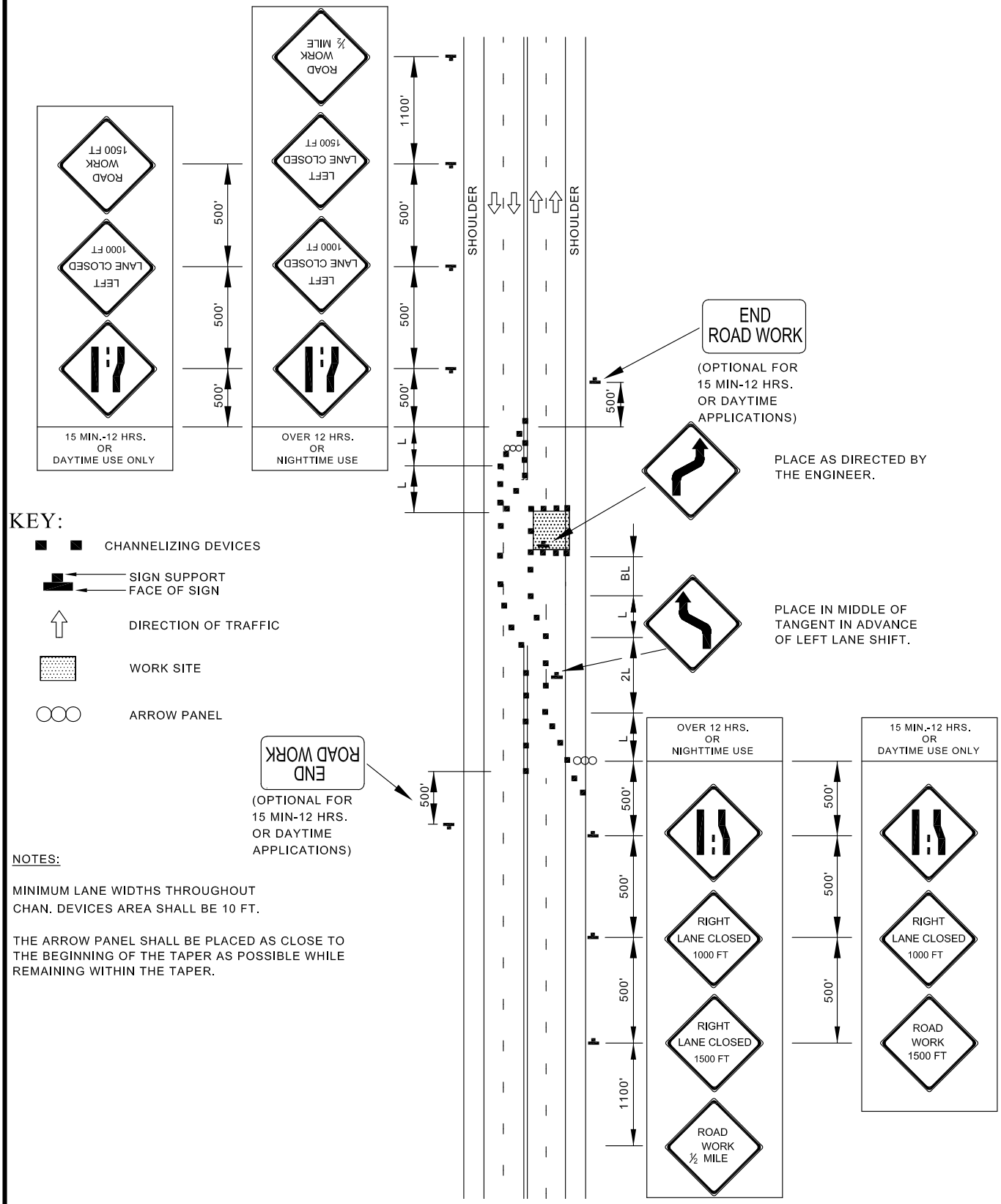

NOTES:

MINIMUM LANE WIDTHS THROUGHOUT CHAN. DEVICES AREA SHALL BE 10 FT.

THE ARROW PANEL SHALL BE PLACED AS CLOSE TO THE BEGINNING OF THE TAPER AS POSSIBLE WHILE REMAINING WITHIN THE TAPER.

APPROVED:

Frank Murphy

DEPUTY DIRECTOR - OPERATIONS

Khalil Zaied

DIRECTOR, DEPARTMENT OF TRANSPORTATION

CITY OF BALTIMORE
DEPARTMENT OF TRANSPORTATION
TRAFFIC DIVISION

ISSUED	REVISED	REVISED
8 / 2010		

PARTIAL ROADWAY CLOSURE / MULTILANE UNDIVIDED EQUAL / LESS THAN 40 MPH

STANDARD NO.
BC 104.03-8

SCALE : NONE

SHEET 1 OF 1

TEMPORARY TRAFFIC CONTROL TYPICAL APPLICATION

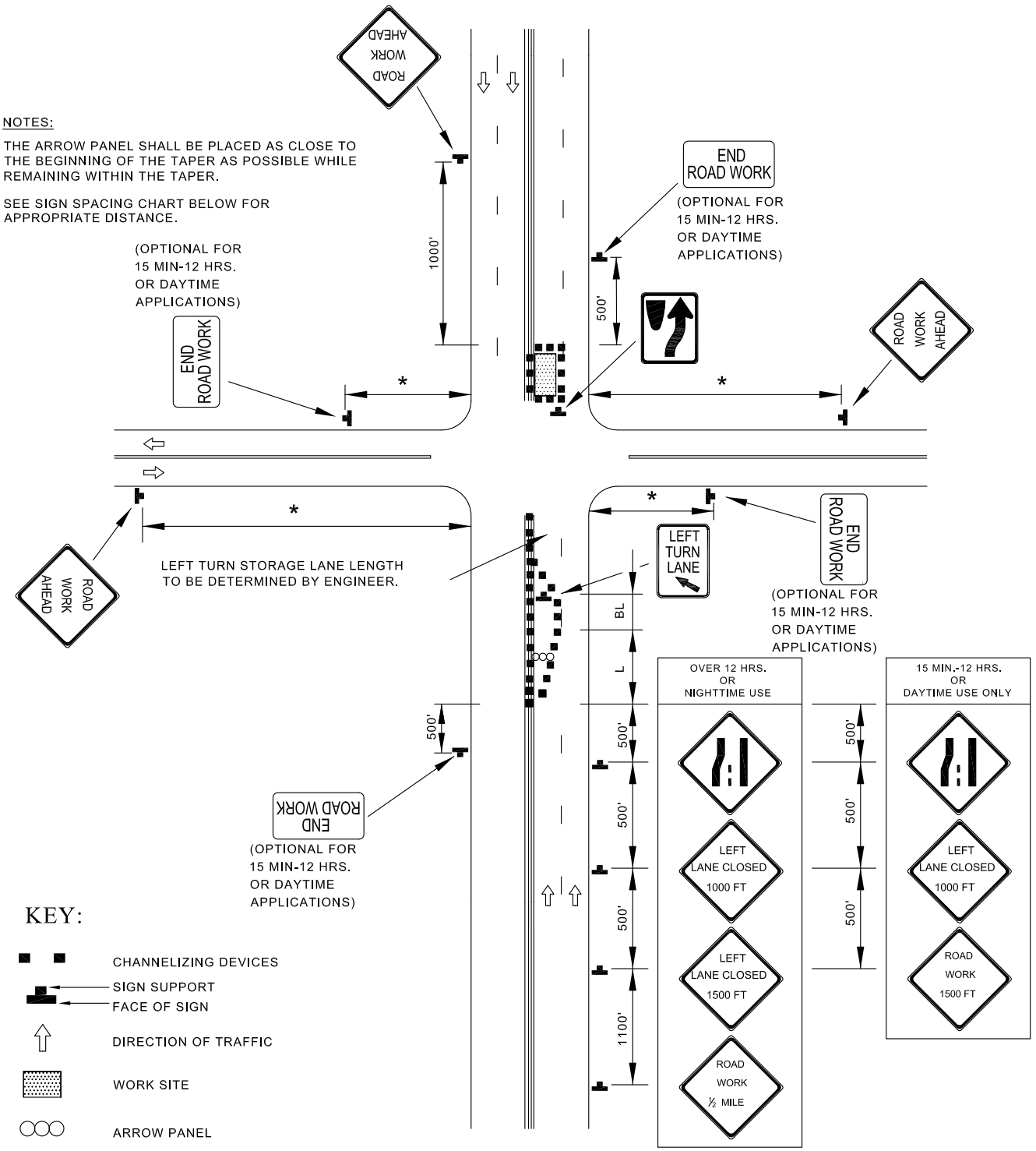

APPROVED:

Frank Murphy

DEPUTY DIRECTOR - OPERATIONS

Khalil Zaied

DIRECTOR, DEPARTMENT OF TRANSPORTATION

CITY OF BALTIMORE
DEPARTMENT OF TRANSPORTATION
TRAFFIC DIVISION

ISSUED	REVISED	REVISED
8 / 2010		

INTERSECTION FAR-LEFT LANE CLOSURE / MULTILANE UNDIVIDED EQUAL / LESS THAN 40 MPH

STANDARD NO.
BC 104.03-10

SCALE : NONE

SHEET 1 OF 1

TEMPORARY TRAFFIC CONTROL TYPICAL APPLICATION

NOTES:

THE ARROW PANEL SHALL BE PLACED AS CLOSE TO THE BEGINNING OF THE TAPER AS POSSIBLE WHILE REMAINING WITHIN THE TAPER WHEN CURB EXIST.

* SEE SIGN SPACING CHART BELOW FOR APPROPRIATE DISTANCE.

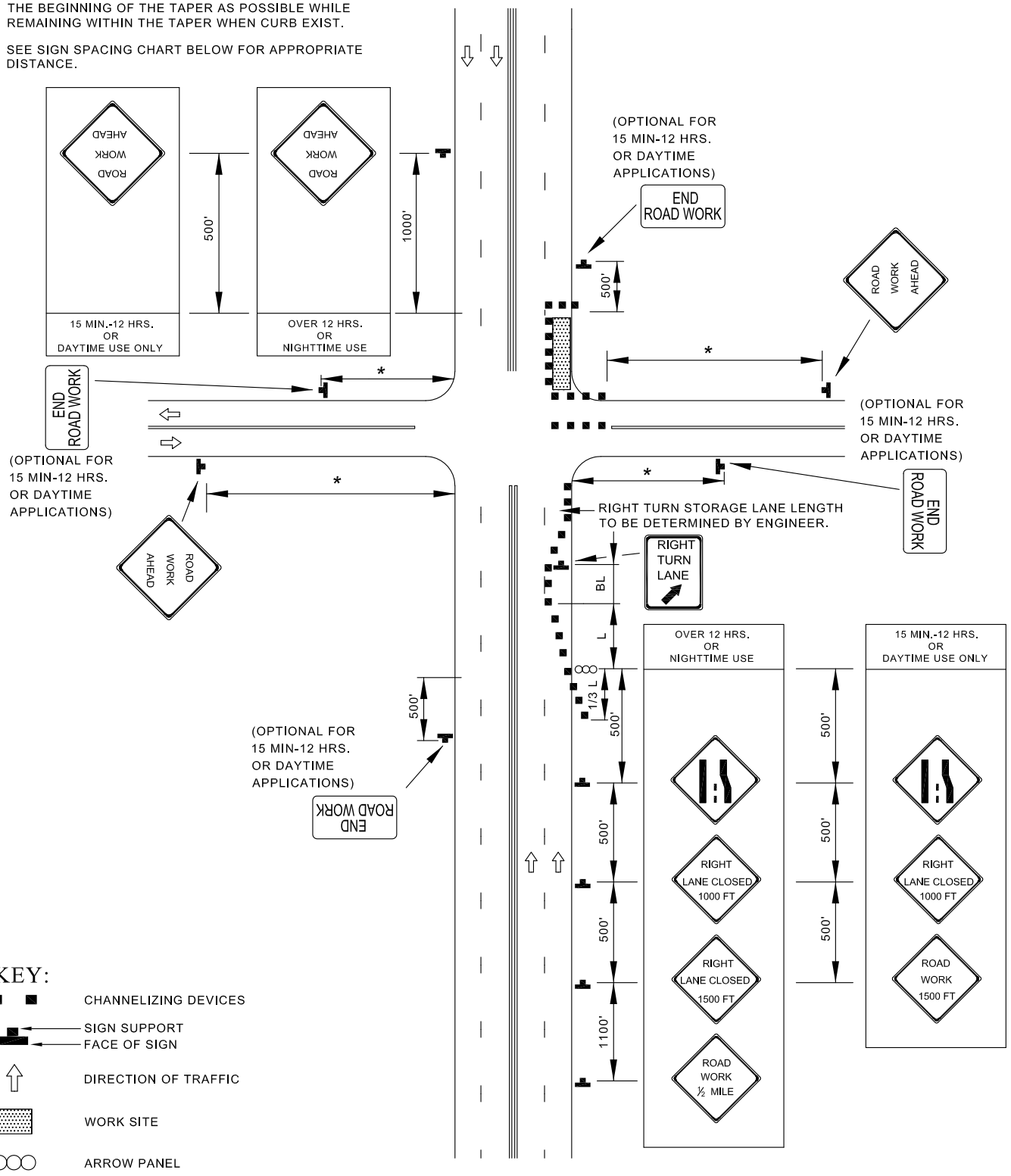

KEY:

- CHANNELIZING DEVICES
- SIGN SUPPORT / FACE OF SIGN
- DIRECTION OF TRAFFIC
- WORK SITE
- ARROW PANEL

APPROVED:

Frank Murphy

DEPUTY DIRECTOR - OPERATIONS

Khalil Zaied

DIRECTOR, DEPARTMENT OF TRANSPORTATION

CITY OF BALTIMORE
DEPARTMENT OF TRANSPORTATION
TRAFFIC DIVISION

ISSUED	REVISED	REVISED
8 / 2010		

INTERSECTION FAR-RIGHT LANE CLOSURE / MULTILANE UNDIVIDED EQUAL / LESS THAN 40 MPH

STANDARD NO.
BC 104.03-12

SCALE : NONE

SHEET 1 OF 1

TEMPORARY TRAFFIC CONTROL TYPICAL APPLICATION

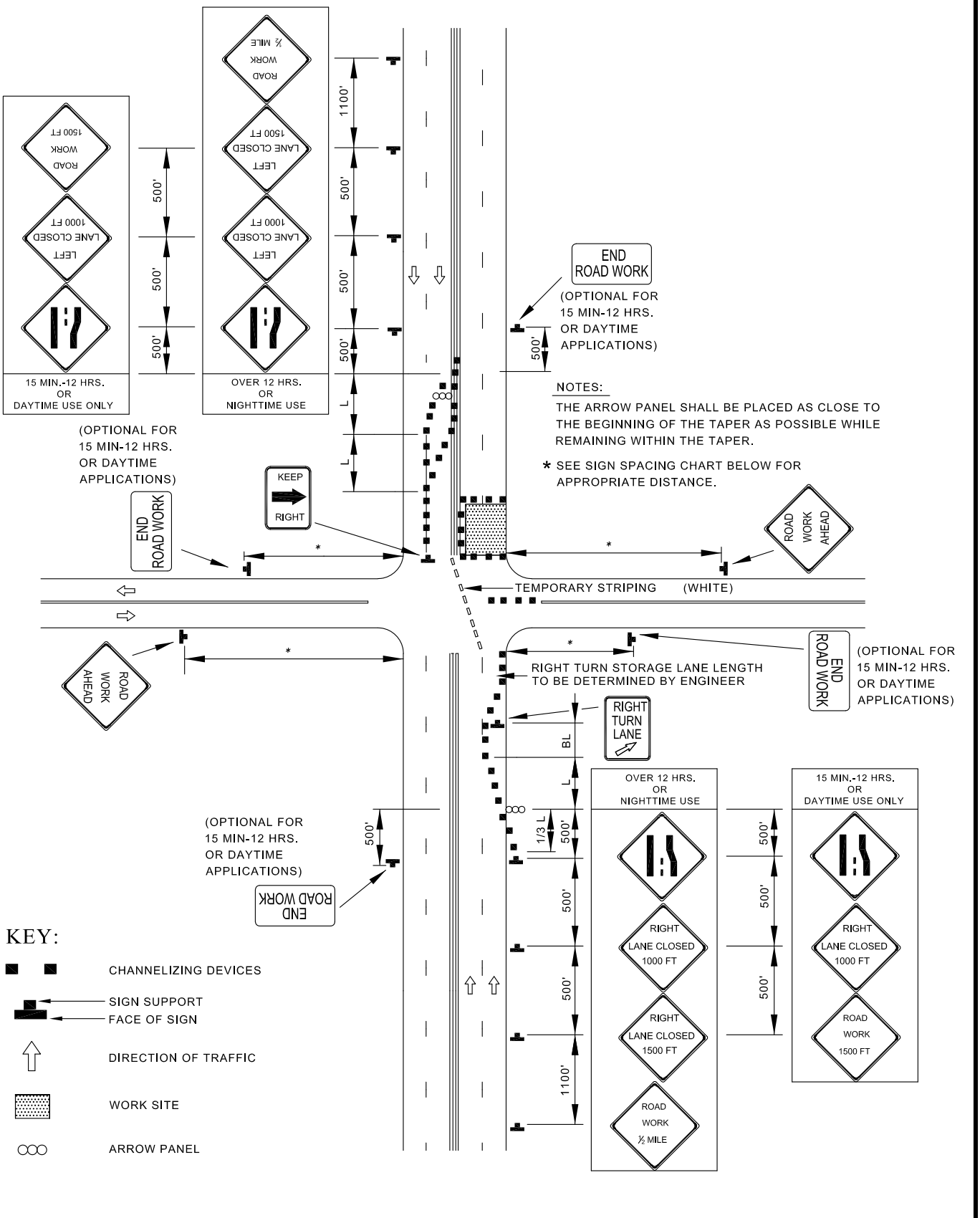

APPROVED:

Frank Murphy
DEPUTY DIRECTOR - OPERATIONS

Khalil Zaied
DIRECTOR, DEPARTMENT OF TRANSPORTATION

CITY OF BALTIMORE
DEPARTMENT OF TRANSPORTATION
TRAFFIC DIVISION

ISSUED	REVISED	REVISED
8 / 2010		

INTERSECTION FAR-SIDE LANE CLOSURE / MULTILANE UNDIVIDED EQUAL / LESS THAN 40 MPH

STANDARD NO.
BC 104.03-14

SCALE : NONE

SHEET 1 OF 1

TEMPORARY TRAFFIC CONTROL TYPICAL APPLICATION

NOTES:
SHOULDER WORK SIGNS SHALL BE MOUNTED ON THE SIDE OF THE ROADWAY WHERE THE SHOULDER IS AFFECTED. USAGE OF SHOULDER WORK SIGNS ON THE OPPOSITE SIDE OF DIVIDED HIGHWAYS IS OPTIONAL.

SHOULDER CLOSED SIGNS ARE REQUIRED IN PLACE OF SHOULDER WORK SIGNS WHEN THE SHOULDER IS CLOSED BY A PHYSICAL BARRIER.

WHEN WORK INVOLVES A PAVEMENT EDGE DROP-OFF, REFER TO STANDARD NO. BC-104.06-12

KEY:

- CHANNELIZING DEVICES
- SIGN SUPPORT
- FACE OF SIGN
- DIRECTION OF TRAFFIC
- WORK SITE

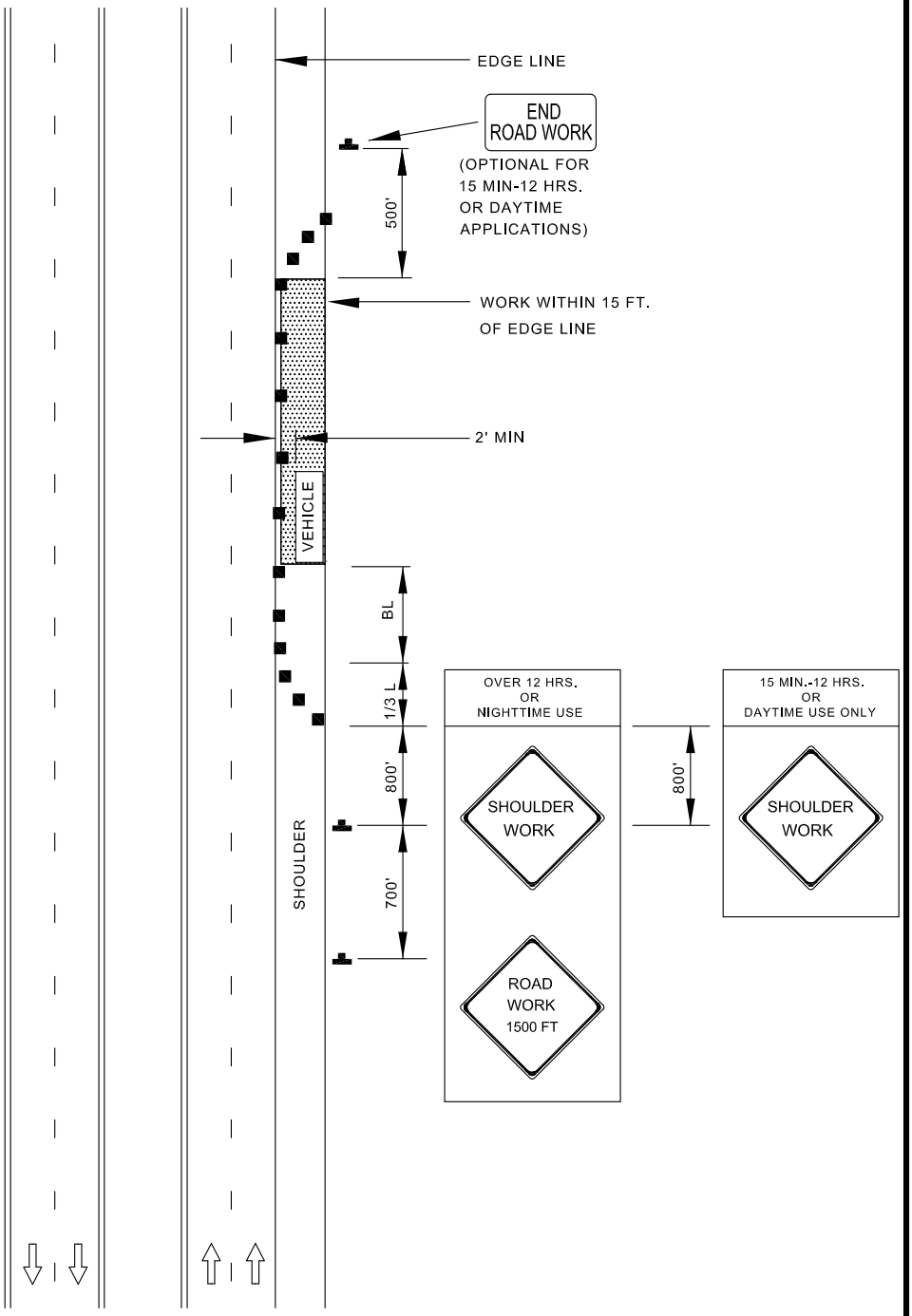

APPROVED:

Frank Murphy
DEPUTY DIRECTOR - OPERATIONS

Khalil Zaied
DIRECTOR, DEPARTMENT OF TRANSPORTATION

CITY OF BALTIMORE
DEPARTMENT OF TRANSPORTATION
TRAFFIC DIVISION

ISSUED	REVISED	REVISED
8 / 2010		

SHOULDER WORK / DIVIDED UNCONNECTED EQUAL / LESS THAN 40 MPH

STANDARD NO. BC 104.04-2

SCALE : NONE

SHEET 1 OF 1

TEMPORARY TRAFFIC CONTROL TYPICAL APPLICATION

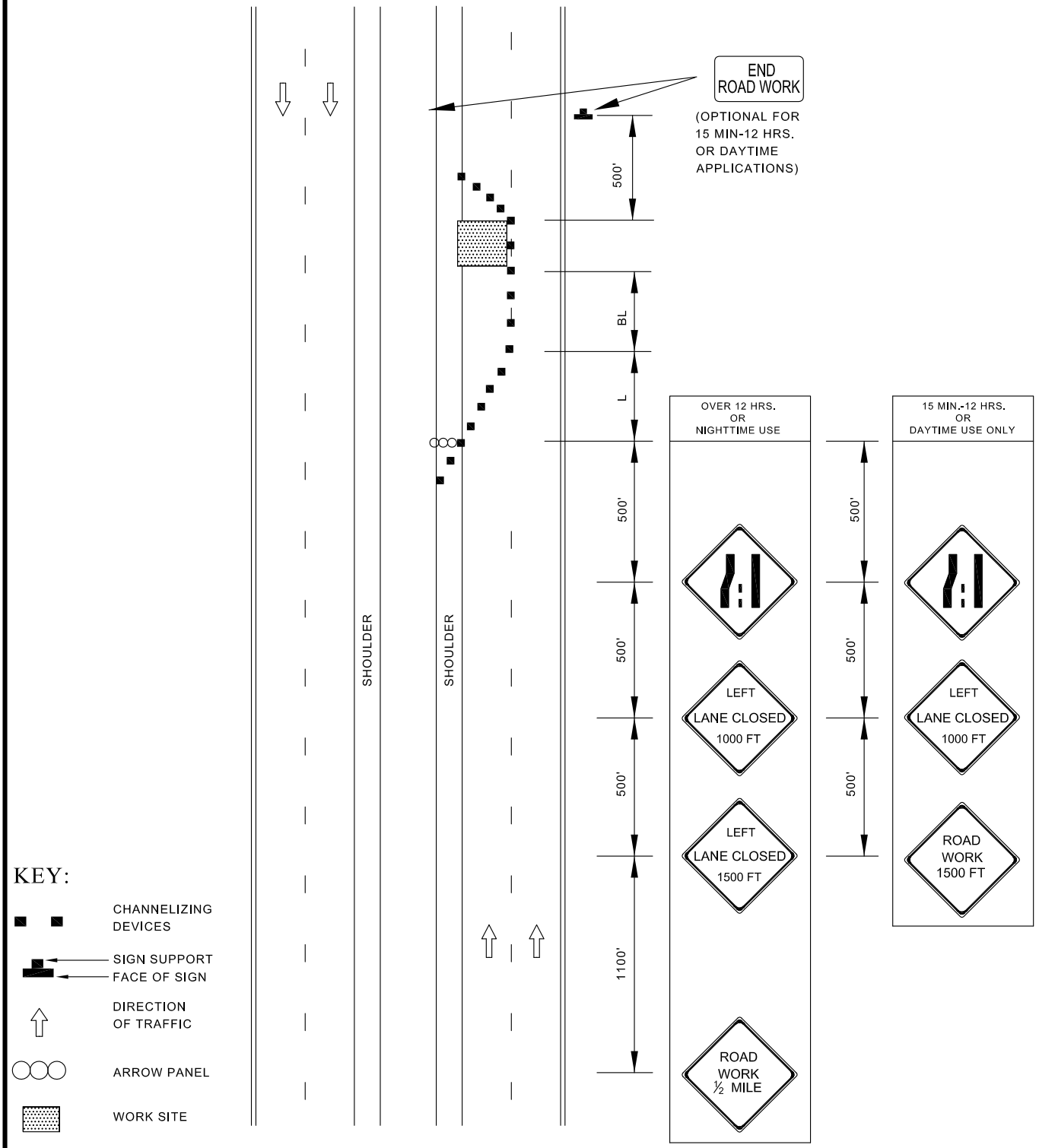

APPROVED:

Frank Murphy

DEPUTY DIRECTOR - OPERATIONS

Khalil Zaied

DIRECTOR, DEPARTMENT OF TRANSPORTATION

CITY OF BALTIMORE
DEPARTMENT OF TRANSPORTATION
TRAFFIC DIVISION

ISSUED	REVISED	REVISED
8 / 2010		

LEFT LANE CLOSURE / DIVIDED UNCONNECTED EQUAL / LESS THAN 40 MPH

STANDARD NO.
BC 104.04-4

SCALE : NONE

SHEET 1 OF 1

TEMPORARY TRAFFIC CONTROL TYPICAL APPLICATION

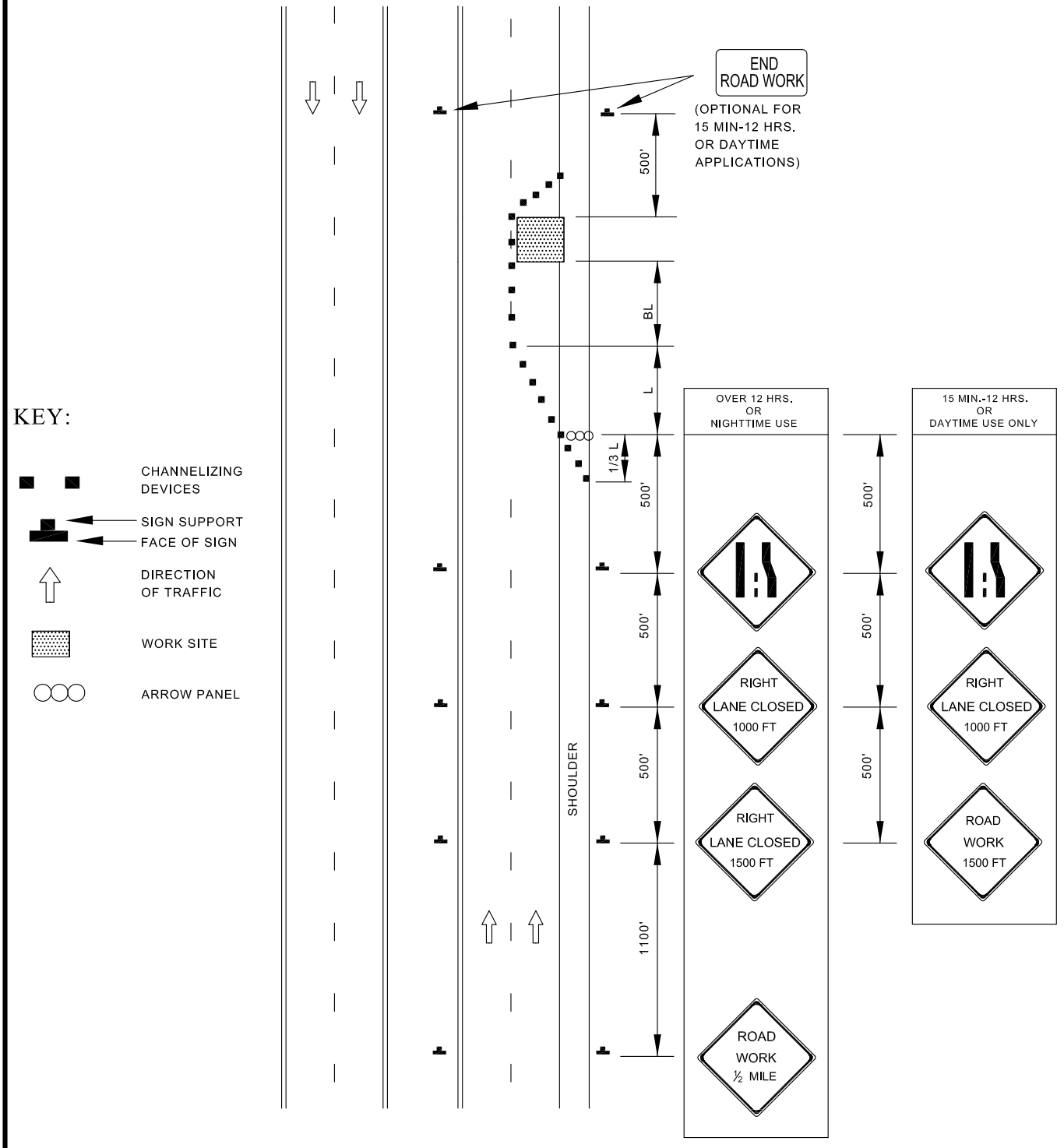

APPROVED:

Frank Murphy

DEPUTY DIRECTOR - OPERATIONS

Khalil Zaied

DIRECTOR, DEPARTMENT OF TRANSPORTATION

CITY OF BALTIMORE
DEPARTMENT OF TRANSPORTATION
TRAFFIC DIVISION

ISSUED	REVISED	REVISED
8 / 2010		

RIGHT LANE CLOSURE / DIVIDED UNCONNECTED EQUAL / LESS THAN 40 MPH

STANDARD NO.
BC 104.04-6

SCALE : NONE

SHEET 1 OF 1

TEMPORARY TRAFFIC CONTROL TYPICAL APPLICATION

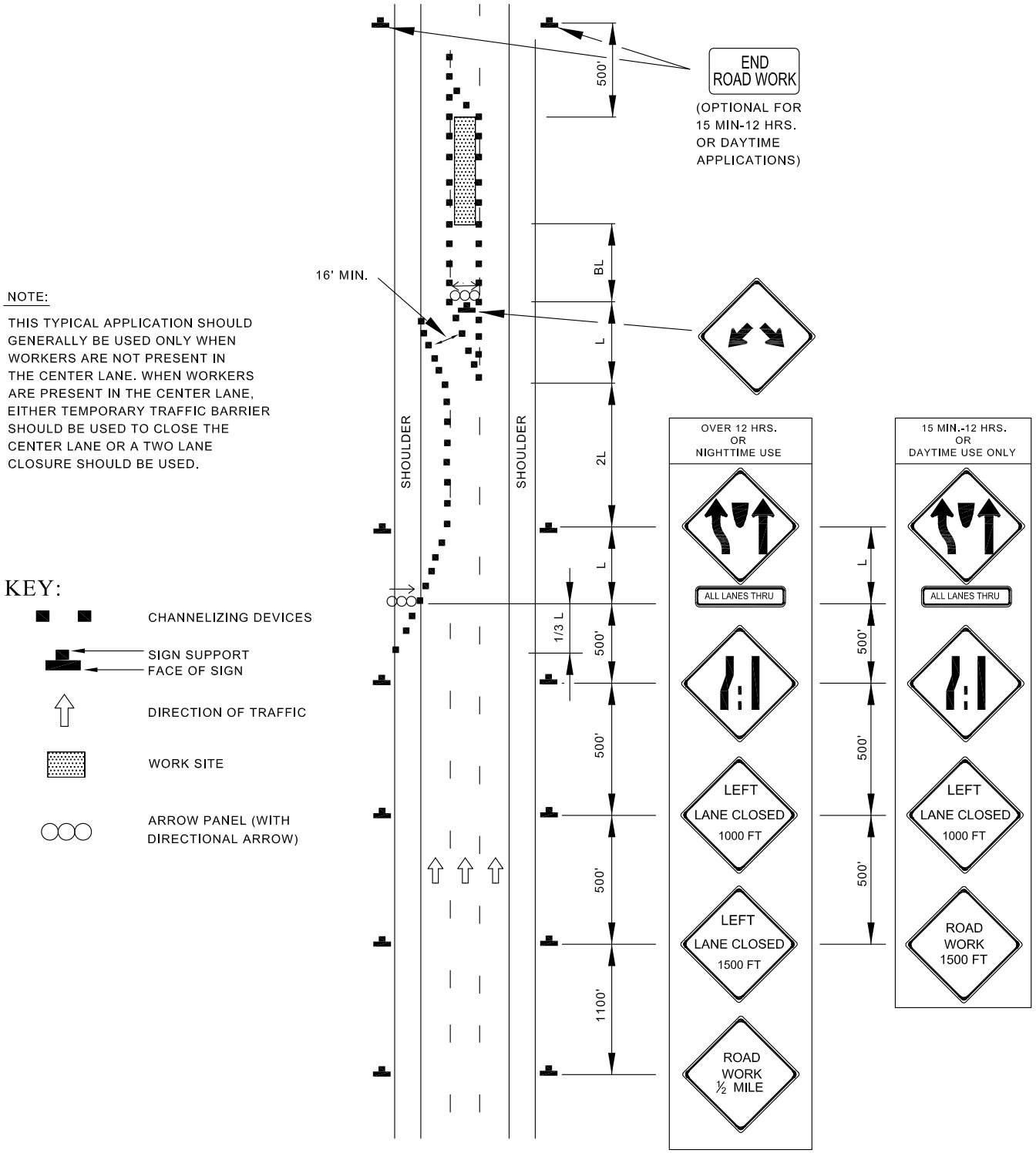

NOTE:

THIS TYPICAL APPLICATION SHOULD GENERALLY BE USED ONLY WHEN WORKERS ARE NOT PRESENT IN THE CENTER LANE. WHEN WORKERS ARE PRESENT IN THE CENTER LANE, EITHER TEMPORARY TRAFFIC BARRIER SHOULD BE USED TO CLOSE THE CENTER LANE OR A TWO LANE CLOSURE SHOULD BE USED.

KEY:

- CHANNELIZING DEVICES
- SIGN SUPPORT / FACE OF SIGN
- DIRECTION OF TRAFFIC
- WORK SITE
- ARROW PANEL (WITH DIRECTIONAL ARROW)

APPROVED:

Frank Murphy

DEPUTY DIRECTOR - OPERATIONS

Khalil Zaied

DIRECTOR, DEPARTMENT OF TRANSPORTATION

CITY OF BALTIMORE
DEPARTMENT OF TRANSPORTATION
TRAFFIC DIVISION

ISSUED	REVISED	REVISED
8 / 2010		

CENTER LANE CLOSURE / DIVIDED UNCONNECTED EQUAL / LESS THAN 40 MPH

STANDARD NO.
BC 104.04-8

SCALE : NONE

SHEET 1 OF 1

TEMPORARY TRAFFIC CONTROL TYPICAL APPLICATION

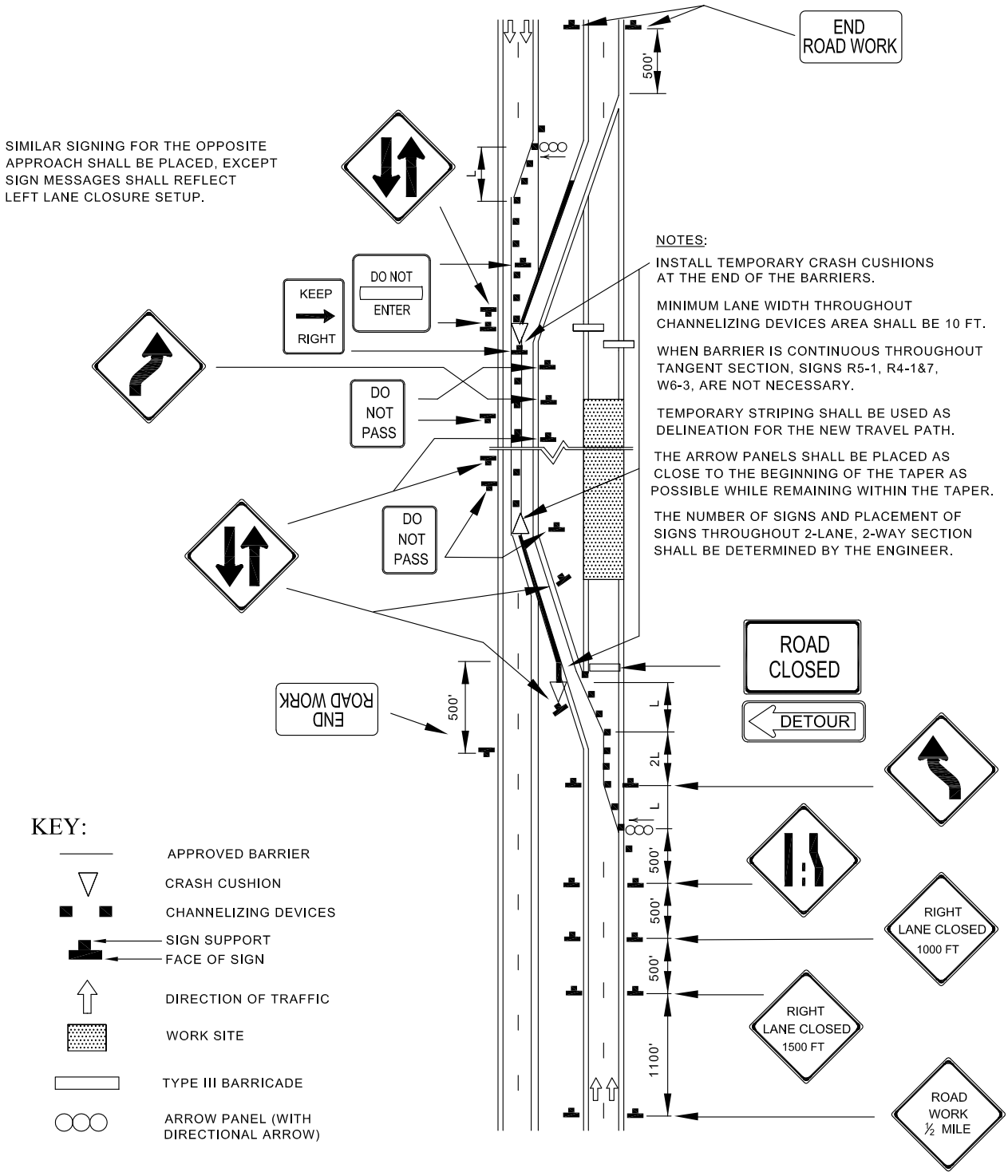

APPROVED:

Frank Murphy

DEPUTY DIRECTOR - OPERATIONS

Khalil Zaied

DIRECTOR, DEPARTMENT OF TRANSPORTATION

CITY OF BALTIMORE
DEPARTMENT OF TRANSPORTATION
TRAFFIC DIVISION

ISSUED	REVISED	REVISED
8 / 2010		

ROADWAY CLOSURE / DIVIDED UNCONNECTED EQUAL / LESS THAN 40 MPH /12 HRS. OR NIGHTTIME USE

STANDARD NO.
BC 104.04-12

SCALE : NONE

SHEET 1 OF 1

TEMPORARY TRAFFIC CONTROL TYPICAL APPLICATION

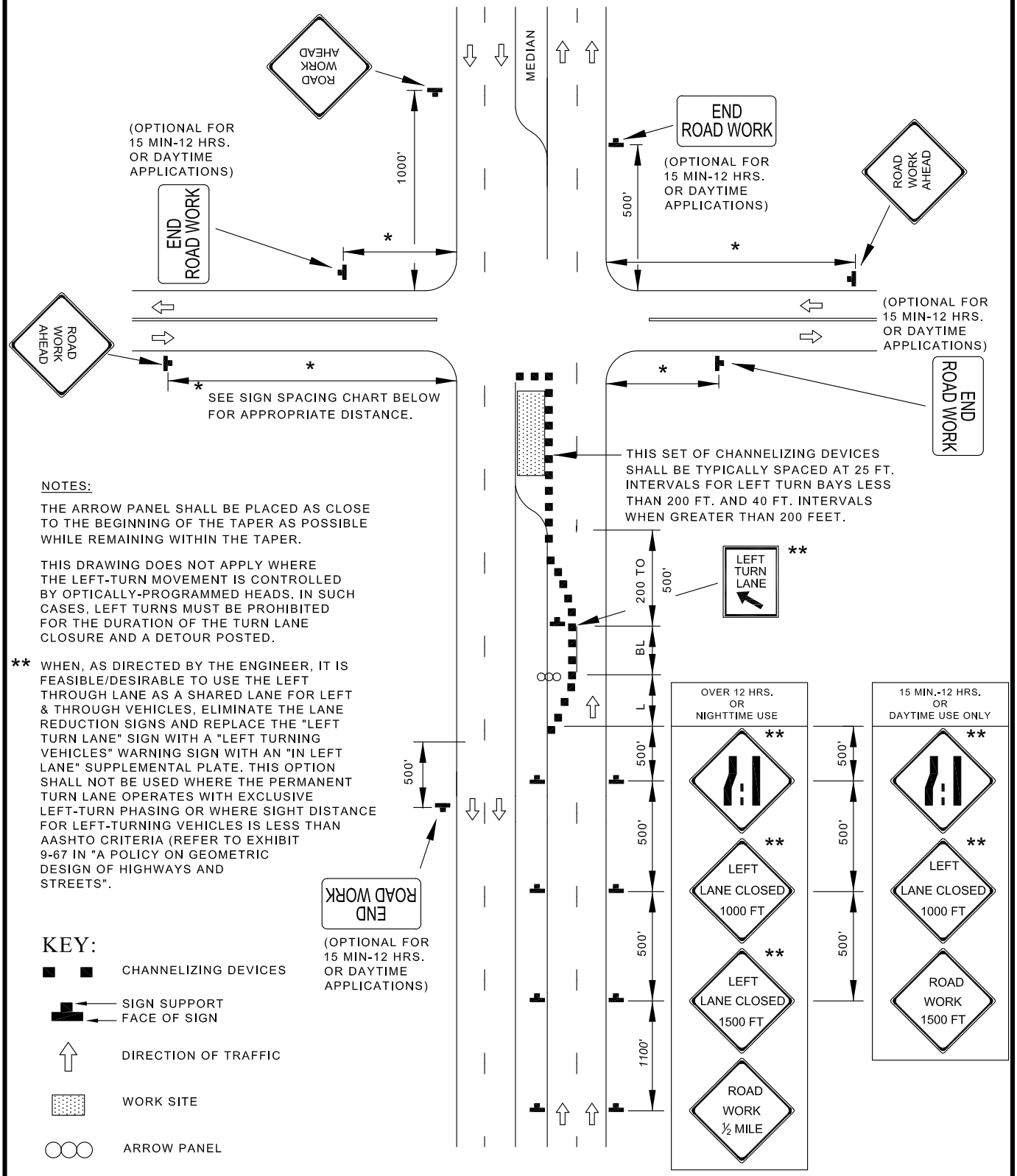

NOTES:

THE ARROW PANEL SHALL BE PLACED AS CLOSE TO THE BEGINNING OF THE TAPER AS POSSIBLE WHILE REMAINING WITHIN THE TAPER.

THIS DRAWING DOES NOT APPLY WHERE THE LEFT-TURN MOVEMENT IS CONTROLLED BY OPTICALLY-PROGRAMMED HEADS. IN SUCH CASES, LEFT TURNS MUST BE PROHIBITED FOR THE DURATION OF THE TURN LANE CLOSURE AND A DETOUR POSTED.

** WHEN, AS DIRECTED BY THE ENGINEER, IT IS FEASIBLE/DESIRABLE TO USE THE LEFT THROUGH LANE AS A SHARED LANE FOR LEFT & THROUGH VEHICLES, ELIMINATE THE LANE REDUCTION SIGNS AND REPLACE THE "LEFT TURN LANE" SIGN WITH A "LEFT TURNING VEHICLES" WARNING SIGN WITH AN "IN LEFT LANE" SUPPLEMENTAL PLATE. THIS OPTION SHALL NOT BE USED WHERE THE PERMANENT TURN LANE OPERATES WITH EXCLUSIVE LEFT-TURN PHASING OR WHERE SIGHT DISTANCE FOR LEFT-TURNING VEHICLES IS LESS THAN AASHTO CRITERIA (REFER TO EXHIBIT 9-67 IN "A POLICY ON GEOMETRIC DESIGN OF HIGHWAYS AND STREETS".

KEY:

- CHANNELIZING DEVICES
- SIGN SUPPORT / FACE OF SIGN
- DIRECTION OF TRAFFIC
- WORK SITE
- ARROW PANEL

APPROVED:

Frank Murphy
DEPUTY DIRECTOR - OPERATIONS

Khalil Zaied
DIRECTOR, DEPARTMENT OF TRANSPORTATION

CITY OF BALTIMORE
DEPARTMENT OF TRANSPORTATION
TRAFFIC DIVISION

ISSUED	REVISED	REVISED
8 / 2010		

LEFT TURN BAY CLOSURE / DIVIDED UNCONNECTED EQUAL / LESS THAN 40 MPH

STANDARD NO. BC 104.04-14

SCALE : NONE

SHEET 1 OF 1

TEMPORARY TRAFFIC CONTROL TYPICAL APPLICATION

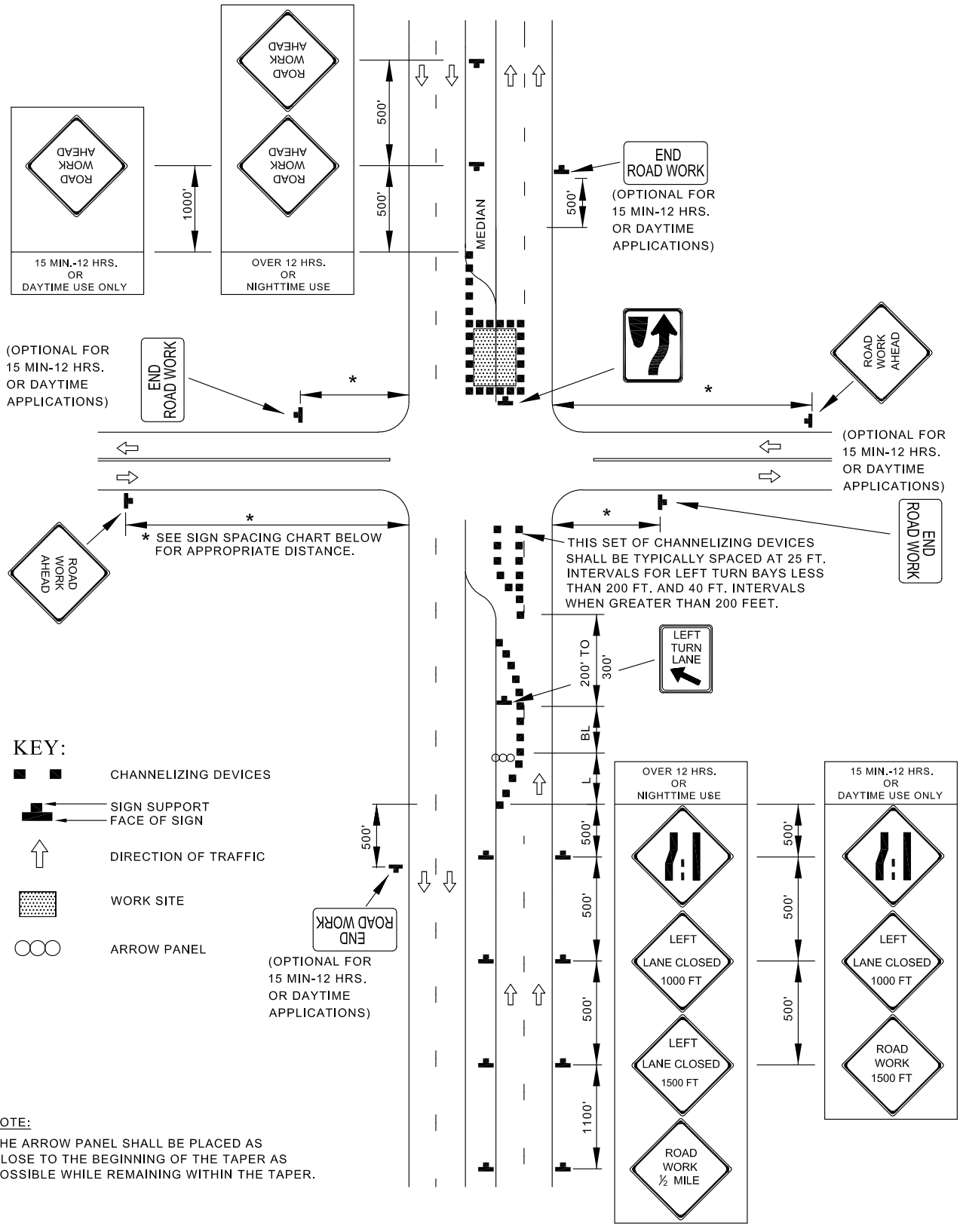

APPROVED:

Frank Murphy

DEPUTY DIRECTOR - OPERATIONS

Khalil Zaied

DIRECTOR, DEPARTMENT OF TRANSPORTATION

CITY OF BALTIMORE
DEPARTMENT OF TRANSPORTATION
TRAFFIC DIVISION

ISSUED	REVISED	REVISED
8 / 2010		

INTERSECTION (LEFT LANE, TURN BAY) CLOSURE / DIVIDED UNCONNECTED EQUAL / LESS THAN 40 MPH

STANDARD NO.
BC 104.04-16

SCALE : NONE

SHEET 1 OF 1

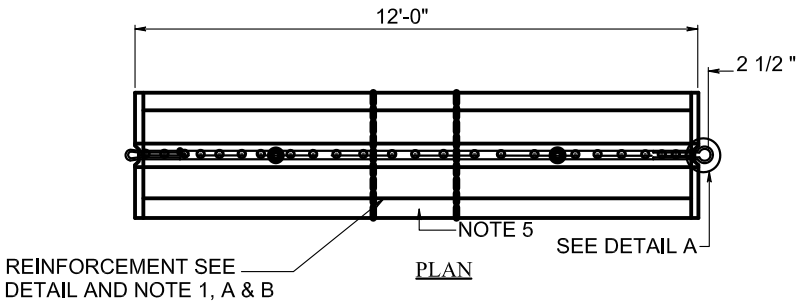

PLAN

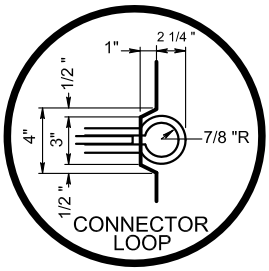

DETAIL A

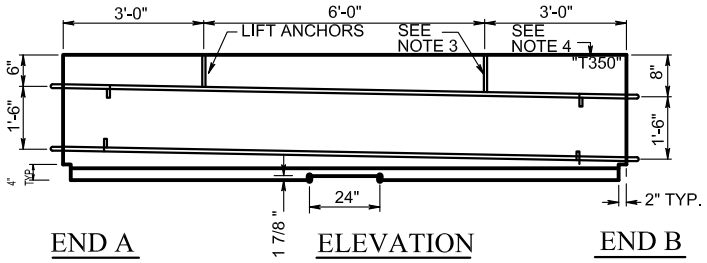

END A ELEVATION END B

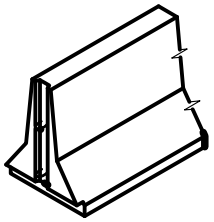

ISOMETRIC END VIEW

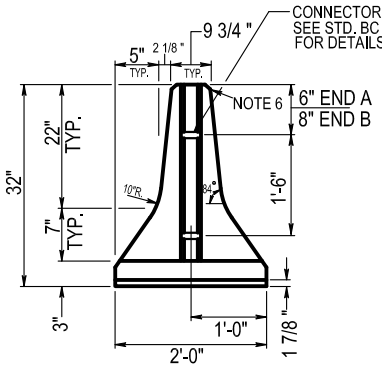

END VIEW

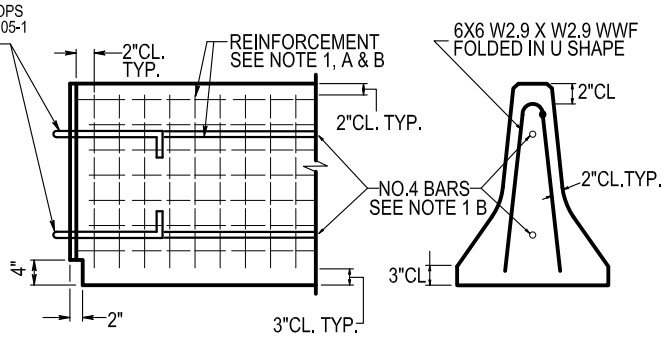

REINFORCEMENT DETAILS

NOTES

1. REINFORCEMENT: A) 6x6 W2.9 X W2.9 WELDED WIRE FABRIC FOLDED IN U SHAPE. B) 2- NO.4 1/2 " Ø REINFORCEMENT BARS - GRADE 60 - EACH 11'-4" LONG.
2. CONCRETE SHALL BE MIX NO. 6 (4500 PSI).
3. 2 -SC52 - 2 TON LIFTING ANCHORS.
4. ALL BARRIERS SHALL HAVE "T350" IMPRINTED ON TOP END OF BARRIER.
5. 24" WIDE X 1 7/8 " HIGH DRAIN PAN.
6. 3/4 " CHAMFER ALONG TOP EDGES.
7. CONNECTOR LOOP -3/4" Ø ROD ASTM 709 GRADE 36 PLAIN SHALL CONFORM TO ASTM A 153.

APPROVED :

Frank Murphy

DEPUTY DIRECTOR - OPERATIONS

Khalil Zaied

DIRECTOR, DEPARTMENT OF TRANSPORTATION

CITY OF BALTIMORE
DEPARTMENT OF TRANSPORTATION
TRAFFIC DIVISION

ISSUED	REVISED	REVISED
8 / 2010		

PRECAST TEMPORARY 32" F SHAPE CONCRETE TRAFFIC BARRIER (PIN AND LOOP JOINT)

STANDARD NO.
BC 104.05

SCALE : NONE

SHEET 1 OF 2

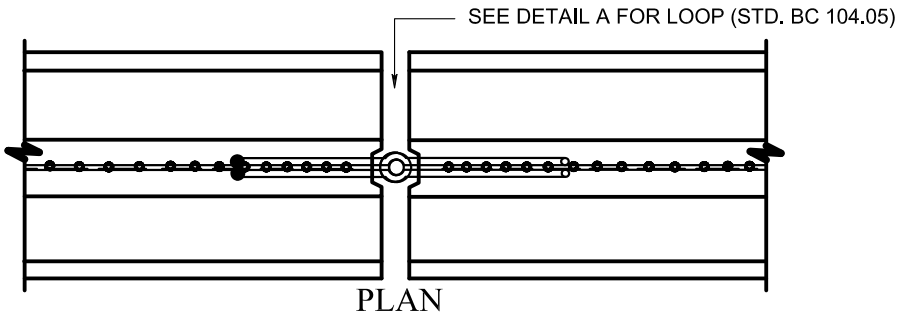

PLAN

(CONNECTOR PIN NOT SHOWN)

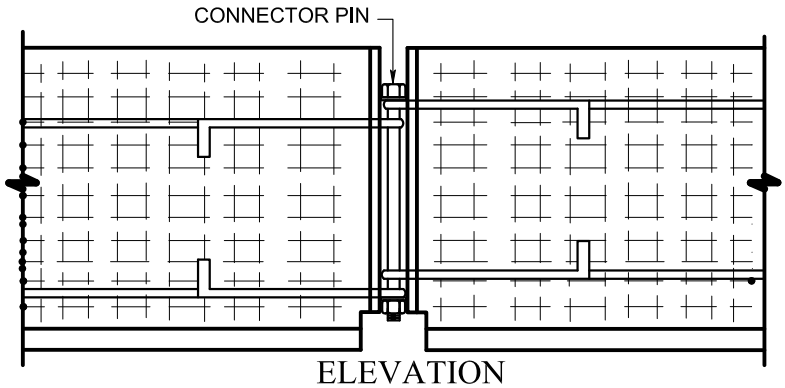

ELEVATION

JOINT DETAILS

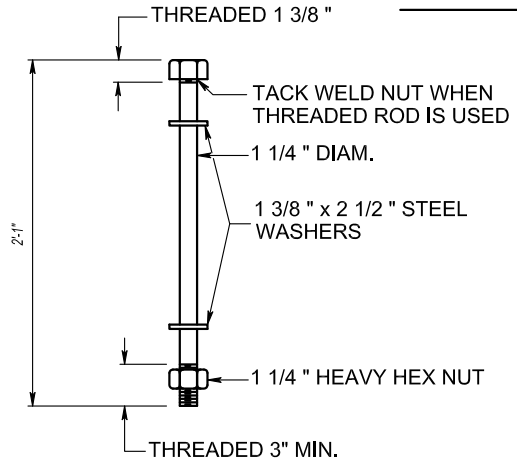

CONNECTOR PIN

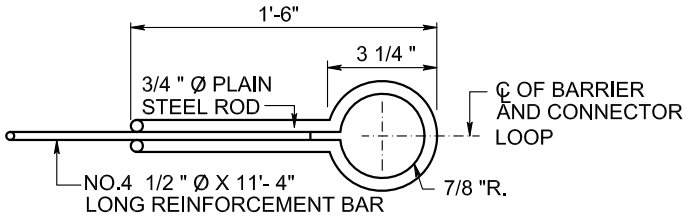

PLAN

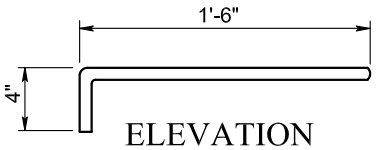

ELEVATION

CONNECTOR LOOP

NOTES

1) THE CONNECTOR PIN SHALL BE 1 1/4 " Ø x 25" AND SHALL CONFORM TO ASTM A307, GRADE A. NUTS SHALL CONFORM TO A 563, WASHERS SHALL CONFORM TO ASTM F 436. THE CONNECTOR PIN, NUTS AND WASHERS SHALL BE PLAIN OR GALVANIZED IN ACCORDANCE WITH ASTM A 153.

2) CONNECTOR LOOP 3/4 " Ø PLAIN STEEL ROD SHALL CONFORM TO ASTM A 709 GRADE 36 PLAIN OR GALVANIZED IN ACCORDANE WITH ASTM A 153 OR STAINLESS STEEL ROD SHALL CONFORM TO ASTM A 276 FOR THE TYPE SPECIFIED.

APPROVED:

Frank Murphy

DEPUTY DIRECTOR - OPERATIONS

Khalil Zaied

DIRECTOR, DEPARTMENT OF TRANSPORTATION

CITY OF BALTIMORE
DEPARTMENT OF TRANSPORTATION
TRAFFIC DIVISION

ISSUED	REVISED	REVISED
8 / 2010		

PRECAST TEMPORARY 32" F SHAPE CONCRETE TRAFFIC BARRIER (PIN AND LOOP JOINT)

STANDARD NO.
BC 104.05-1

SCALE : NONE

SHEET 2 OF 2

TEMPORARY TRAFFIC CONTROL TYPICAL APPLICATION

NOTES:

SHOULDER WORK SIGNS SHALL BE MOUNTED ON THE SIDE OF THE ROADWAY WHERE THE SHOULDER IS AFFECTED. USAGE OF SHOULDER WORK SIGNS ON THE OPPOSITE SIDE OF DIVIDED HIGHWAYS IS OPTIONAL.

SHOULDER CLOSED SIGNS ARE REQUIRED IN PLACE OF SHOULDER WORK SIGNS WHEN THE SHOULDER IS CLOSED BY A PHYSICAL BARRIER.

WHEN WORK INVOLVES A PAVEMENT EDGE DROP-OFF, REFER TO STANDARD NO. BC-104.06-12.

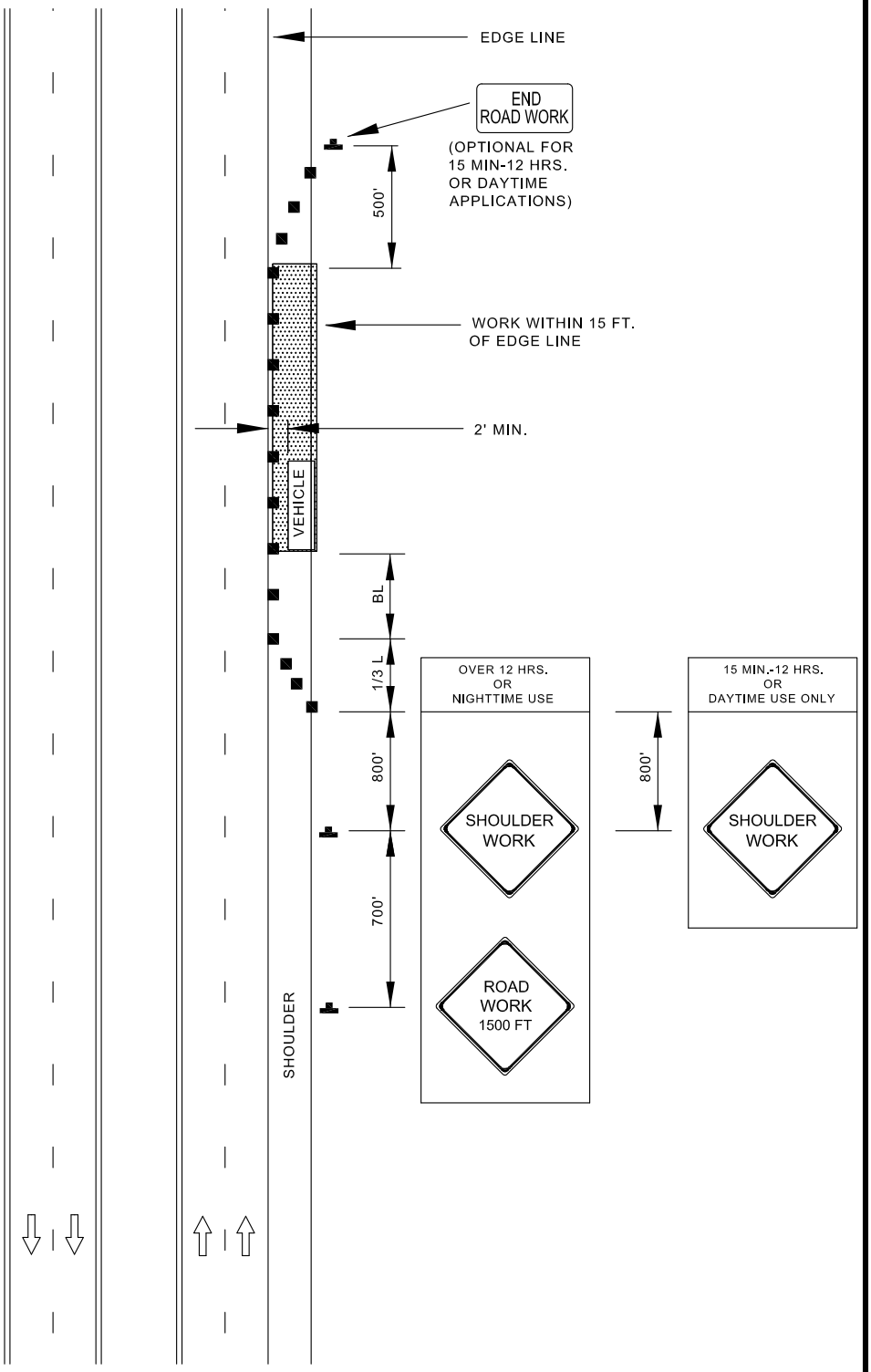

KEY:

- CHANNELIZING DEVICES
- SIGN SUPPORT
- FACE OF SIGN
- DIRECTION OF TRAFFIC
- WORK SITE

APPROVED:

Frank Murphy

DEPUTY DIRECTOR - OPERATIONS

Khalil Zaied

DIRECTOR, DEPARTMENT OF TRANSPORTATION

CITY OF BALTIMORE
DEPARTMENT OF TRANSPORTATION
TRAFFIC DIVISION

ISSUED	REVISED	REVISED
8 / 2010		

SHOULDER WORK / EXP-FREEWAY / EQUAL / LESS THAN 40 MPH

STANDARD NO. BC 104.05-2

SCALE : NONE

SHEET 1 OF 1

TEMPORARY TRAFFIC CONTROL TYPICAL APPLICATION

NOTES:

THIS TYPICAL ALSO APPLIES TO DIVIDED UNCONTROLLED HIGHWAYS

THE "BEGIN AND END SHOULDER USE" SIGNS SHOULD BE OMITTED WHEN THE SHOULDER CANNOT BE DIFFERENTIATED FROM THE NORMAL TRAVEL PATH.

THIS TYPICAL SHALL BE USED FOR ANY LANE SHIFT WHERE PREVAILING SPEEDS CANNOT BE MAINTAINED THROUGH THE SHIFT.

- FOR LANE SHIFTS WHICH DO NOT SATISFY ABOVE CONDITIONS:
  - DELETE "REVERSE CURVE" WARNING SIGNS, AND
  - REPLACE "LANE SHIFT" SIGNS WITH "ROAD WORK XXX" SIGNS OR OTHER APPROPRIATE SIGNS AS SHOWN IN TEMPORARY TRAFFIC CONTROL TYPICAL APPLICATIONS.

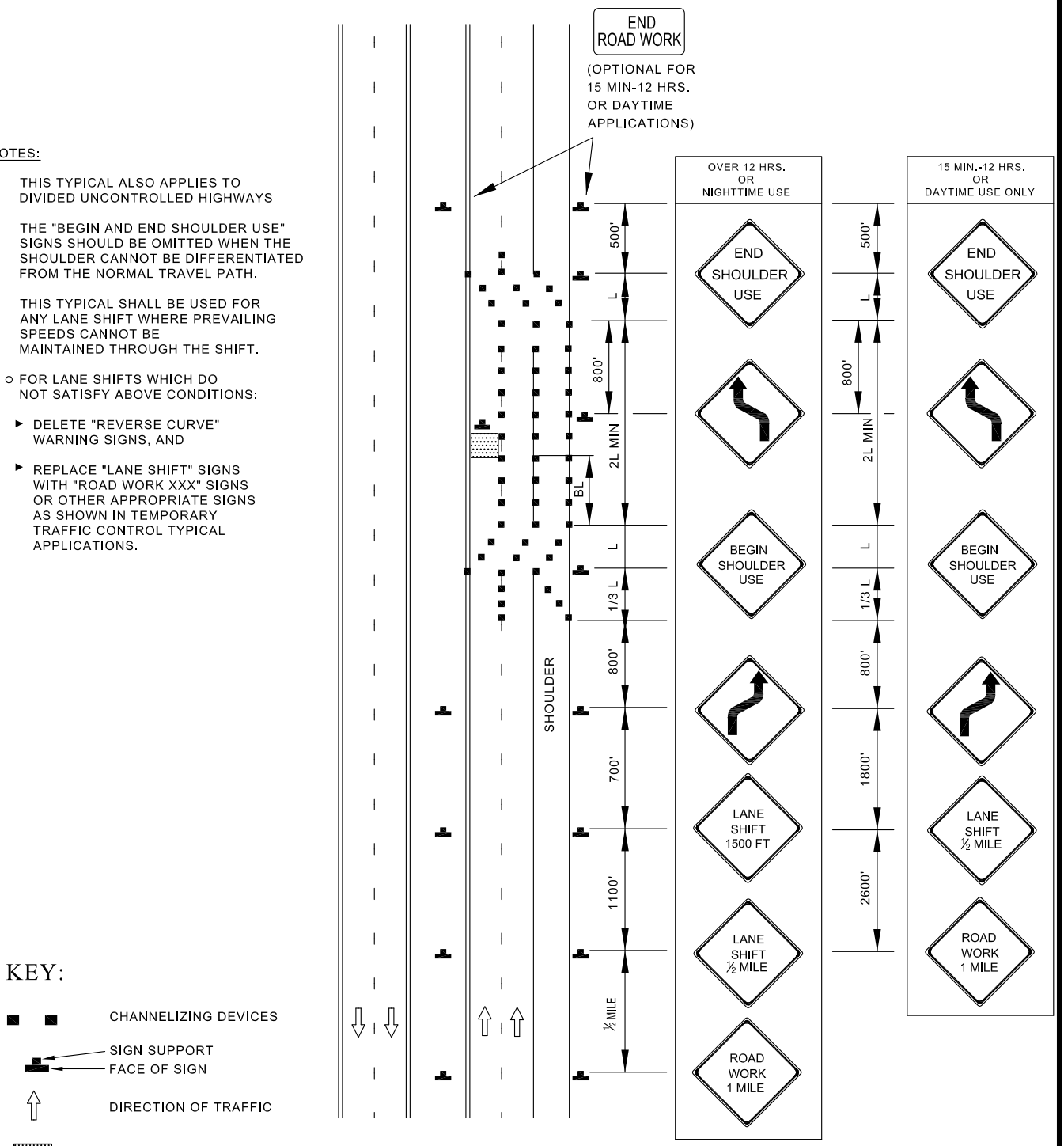

KEY:

- CHANNELIZING DEVICES
- SIGN SUPPORT
- FACE OF SIGN
- DIRECTION OF TRAFFIC
- WORK SITE

APPROVED:

Frank Murphy

DEPUTY DIRECTOR - OPERATIONS

Khalil Zaied

DIRECTOR, DEPARTMENT OF TRANSPORTATION

CITY OF BALTIMORE
DEPARTMENT OF TRANSPORTATION
TRAFFIC DIVISION

ISSUED	REVISED	REVISED
8 / 2010		

ROADWAY SHIFT / EXP-FREEWAY / GREATER THAN 40 MPH

STANDARD NO. BC 104.05-3

SCALE : NONE

SHEET 1 OF 1

TEMPORARY TRAFFIC CONTROL TYPICAL APPLICATION

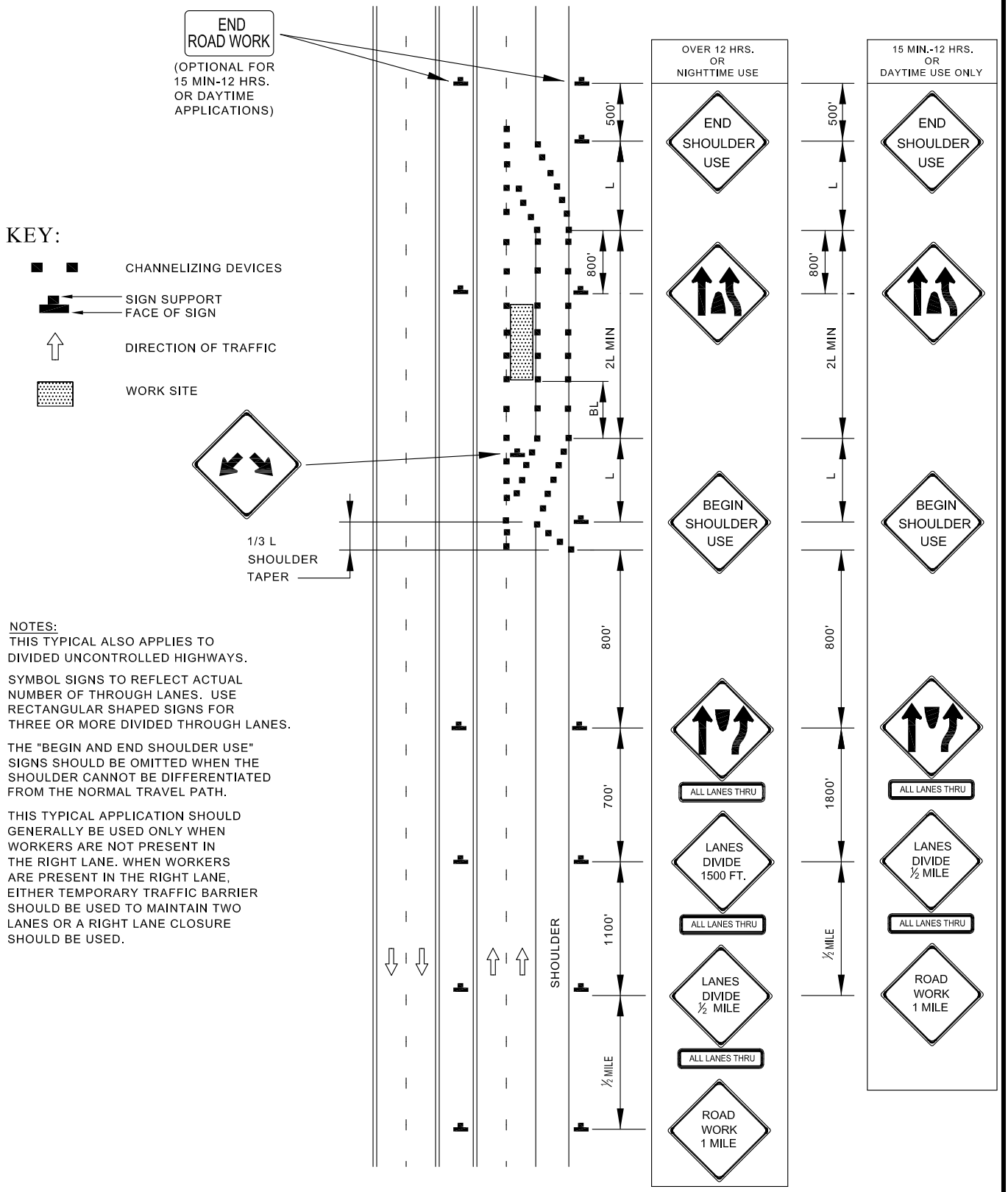

NOTES:

THIS TYPICAL ALSO APPLIES TO DIVIDED UNCONTROLLED HIGHWAYS.

SYMBOL SIGNS TO REFLECT ACTUAL NUMBER OF THROUGH LANES. USE RECTANGULAR SHAPED SIGNS FOR THREE OR MORE DIVIDED THROUGH LANES.

THE "BEGIN AND END SHOULDER USE" SIGNS SHOULD BE OMITTED WHEN THE SHOULDER CANNOT BE DIFFERENTIATED FROM THE NORMAL TRAVEL PATH.

THIS TYPICAL APPLICATION SHOULD GENERALLY BE USED ONLY WHEN WORKERS ARE NOT PRESENT IN THE RIGHT LANE. WHEN WORKERS ARE PRESENT IN THE RIGHT LANE, EITHER TEMPORARY TRAFFIC BARRIER SHOULD BE USED TO MAINTAIN TWO LANES OR A RIGHT LANE CLOSURE SHOULD BE USED.

APPROVED:

Frank Murphy

DEPUTY DIRECTOR - OPERATIONS

Khalil Zaied

DIRECTOR, DEPARTMENT OF TRANSPORTATION

CITY OF BALTIMORE
DEPARTMENT OF TRANSPORTATION
TRAFFIC DIVISION

ISSUED	REVISED	REVISED
8 / 2010		

LANES DIVIDE / EXP-FREEWAY / GREATER THAN 40 MPH

STANDARD NO.
BC 104.05-4

SCALE : NONE

SHEET 1 OF 1

TEMPORARY TRAFFIC CONTROL TYPICAL APPLICATION

NOTES:
THIS TYPICAL ALSO APPLIES TO DIVIDED UNCONTROLLED HIGHWAYS,

SYMBOL SIGNS TO REFLECT ACTUAL NUMBER OF THROUGH LANES.

* WHEN LANES WILL NOT BE DIVIDED IN SUBSEQUENT WORK PHASES, USE THE W 1-4(R/L) SIGNS IN LIEU OF SIGNS SHOWN WITH ASTERISK (*).

THIS TYPICAL SHALL BE USED FOR ANY LANE SHIFT WHERE PREVAILING SPEEDS CANNOT BE MAINTAINED THROUGH THE SHIFT.

○ FOR LANE SHIFTS WHICH DO NOT SATISFY ABOVE CONDITIONS:

- ► DELETE "REVERSE CURVE" WARNING SIGNS, AND
- ► REPLACE "LANE SHIFT" SIGNS WITH "ROAD WORK XXX" SIGNS OR OTHER APPROPRIATE SIGNS AS SHOWN IN TEMPORARY TRAFFIC CONTROL TYPICAL APPLICATIONS.

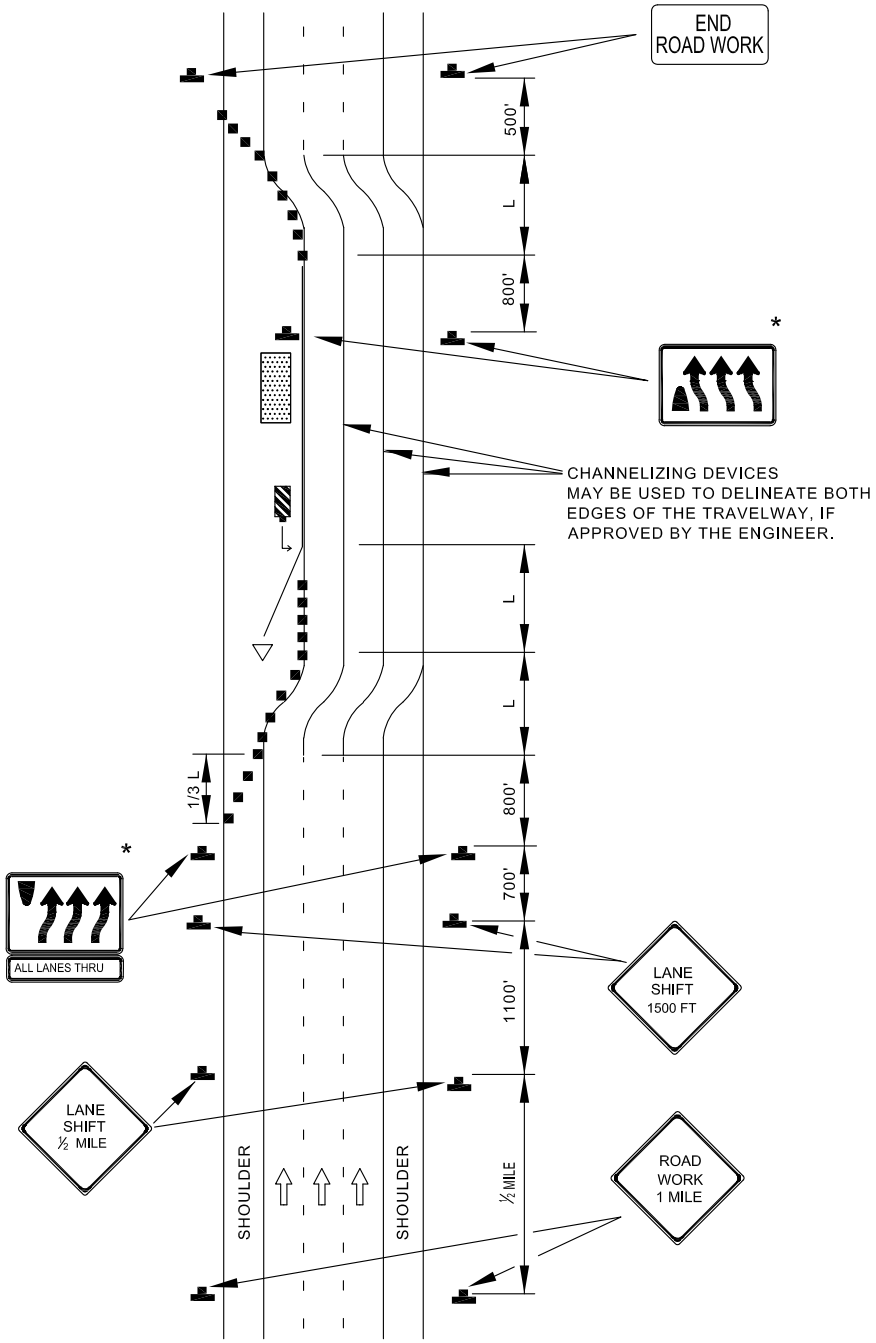

KEY:

- APPROVED BARRIER
- CRASH CUSHIONS
- CHANNELIZING DEVICES
- SIGN SUPPORT
- FACE OF SIGN
- DIRECTION OF TRAFFIC
- WORK SITE
- OBJECT MARKER

APPROVED:
Frank Murphy
DEPUTY DIRECTOR - OPERATIONS
Khalil Zaied
DIRECTOR, DEPARTMENT OF TRANSPORTATION

CITY OF BALTIMORE
DEPARTMENT OF TRANSPORTATION
TRAFFIC DIVISION

ISSUED	REVISED	REVISED
8 / 2010		

LANES SHIFT / EXP-FREEWAY / GREATER THAN 40 MPH / OVER 12 HRS. OR NIGHTTIME USE

STANDARD NO.
BC 104.05-5

SCALE : NONE | SHEET 1 OF 1

TEMPORARY TRAFFIC CONTROL TYPICAL APPLICATION

NOTES:
THIS TYPICAL ALSO APPLIES TO DIVIDED UNCONTROLLED HIGHWAYS,

SYMBOL SIGNS TO REFLECT ACTUAL NUMBER OF THROUGH LANES.

KEY:

- APPROVED BARRIER
- CRASH CUSHIONS
- CHANNELIZING DEVICES
- SIGN SUPPORT
- FACE OF SIGN
- DIRECTION OF TRAFFIC
- WORK SITE
- ARROW PANEL(WITH DIRECTIONAL ARROW)
- OBJECT MARKER

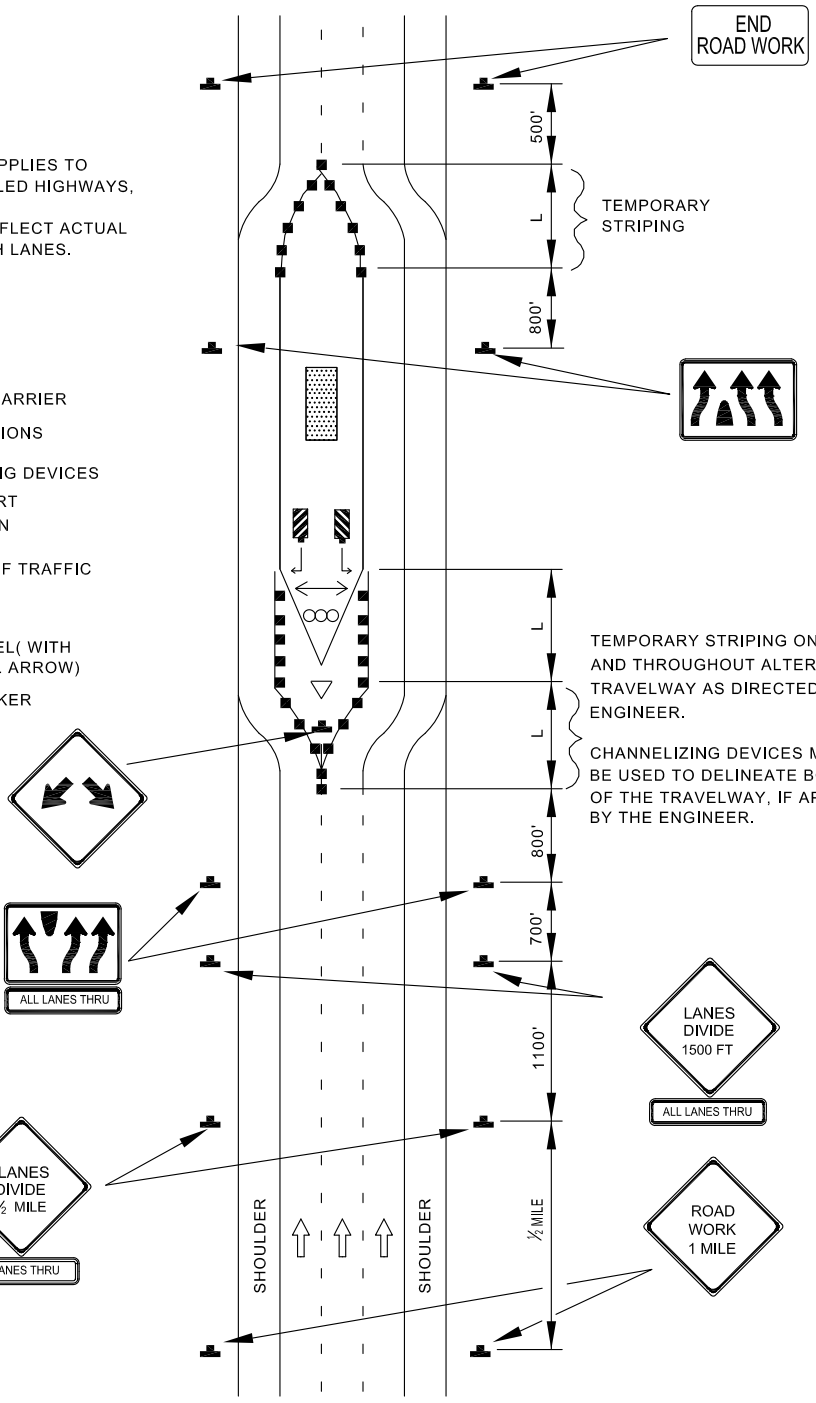

APPROVED:

Frank Murphy

DEPUTY DIRECTOR - OPERATIONS

Khalil Zaied

DIRECTOR, DEPARTMENT OF TRANSPORTATION

CITY OF BALTIMORE
DEPARTMENT OF TRANSPORTATION
TRAFFIC DIVISION

ISSUED	REVISED	REVISED
8 / 2010		

LANES DIVIDE / EXP-FREEWAY / GREATER THAN 40 MPH / OVER 12 HRS. OR NIGHTTIME USE

STANDARD NO.
BC 104.05-6

SCALE : NONE

SHEET 1 OF 1

TEMPORARY TRAFFIC CONTROL TYPICAL APPLICATION

KEY:

- CHANNELIZING DEVICES
- SIGN SUPPORT
- FACE OF SIGN
- DIRECTION OF TRAFFIC
- WORK SITE
- ARROW PANEL

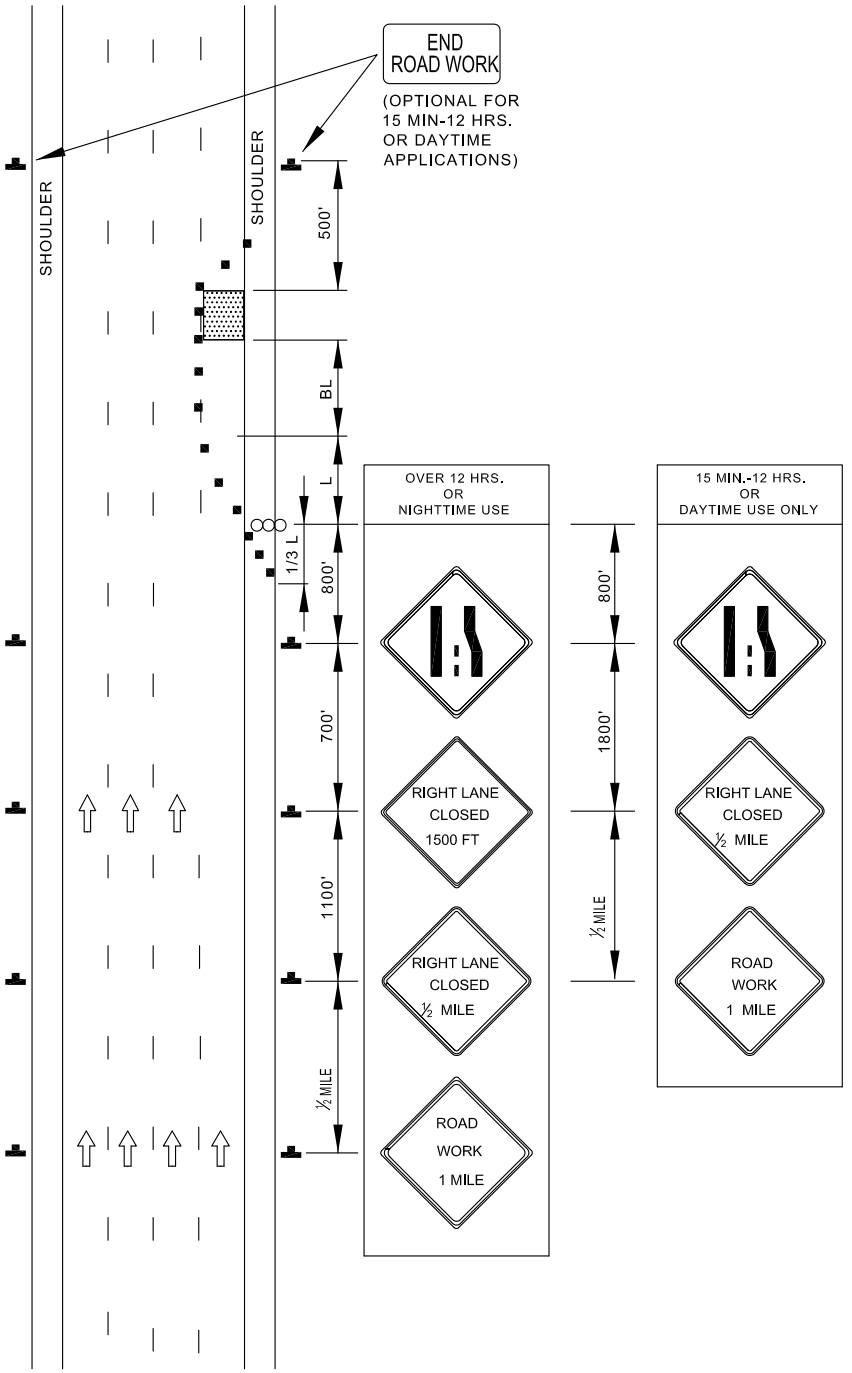

APPROVED:

Frank Murphy

DEPUTY DIRECTOR - OPERATIONS

Khalil Zaied

DIRECTOR, DEPARTMENT OF TRANSPORTATION

CITY OF BALTIMORE
DEPARTMENT OF TRANSPORTATION
TRAFFIC DIVISION

ISSUED	REVISED	REVISED
8 / 2010		

RIGHT LANE CLOSURE / EXP-FREEWAY GREATER THAN 40 MPH

STANDARD NO.
BC 104.05-7

SCALE : NONE

SHEET 1 OF 1

TEMPORARY TRAFFIC CONTROL TYPICAL APPLICATION

KEY:

- CHANNELIZING DEVICES
- SIGN SUPPORT / FACE OF SIGN
- DIRECTION OF TRAFFIC
- WORK SITE
- ARROW PANEL

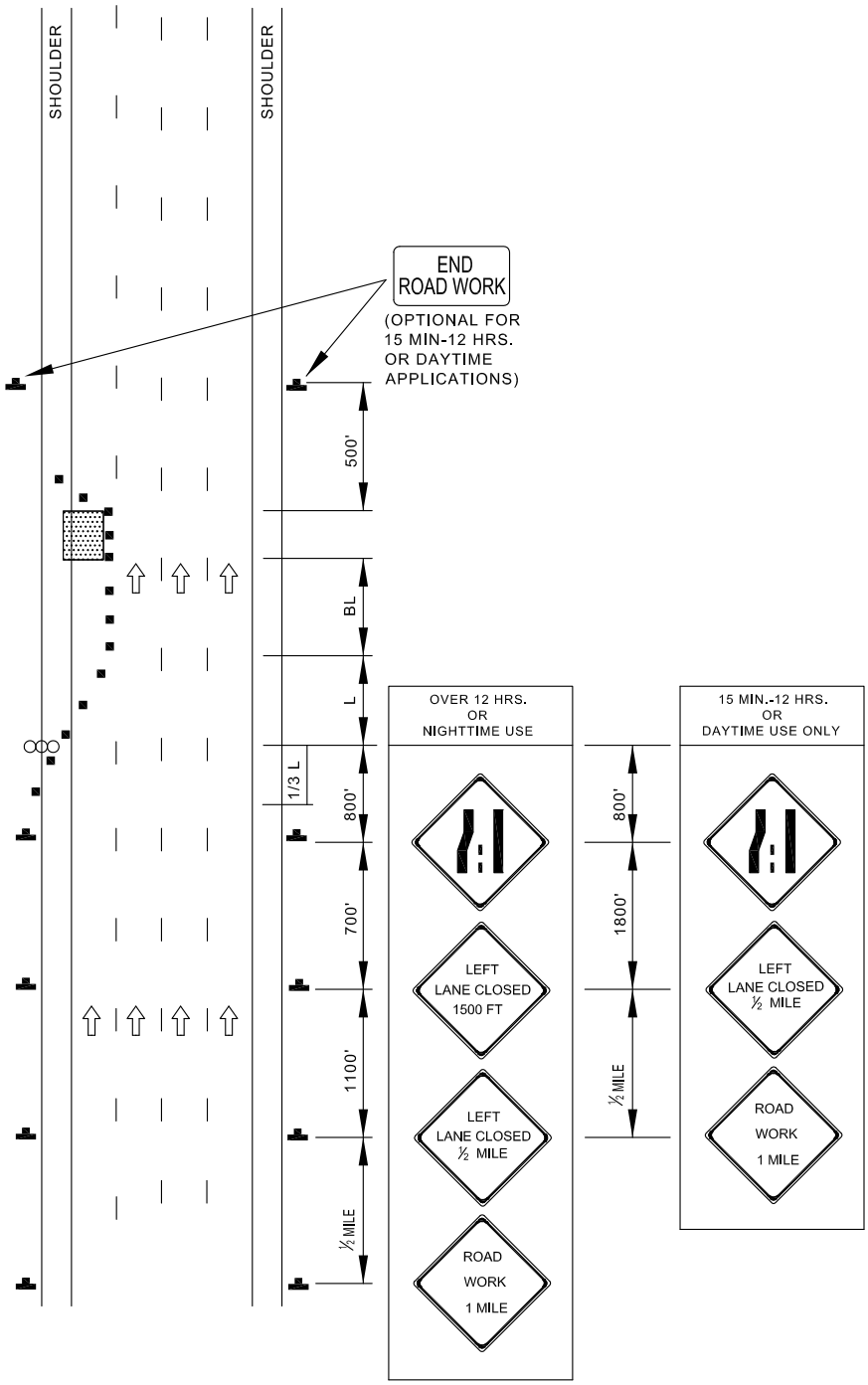

APPROVED:

Frank Murphy

DEPUTY DIRECTOR - OPERATIONS

Khalil Zaied

DIRECTOR, DEPARTMENT OF TRANSPORTATION

CITY OF BALTIMORE
DEPARTMENT OF TRANSPORTATION
TRAFFIC DIVISION

ISSUED	REVISED	REVISED
8 / 2010		

LEFT LANE CLOSURE / EXP-FREEWAY GREATER THAN 40 MPH

STANDARD NO. BC 104.05-8

SCALE : NONE

SHEET 1 OF 1

TEMPORARY TRAFFIC CONTROL TYPICAL APPLICATION

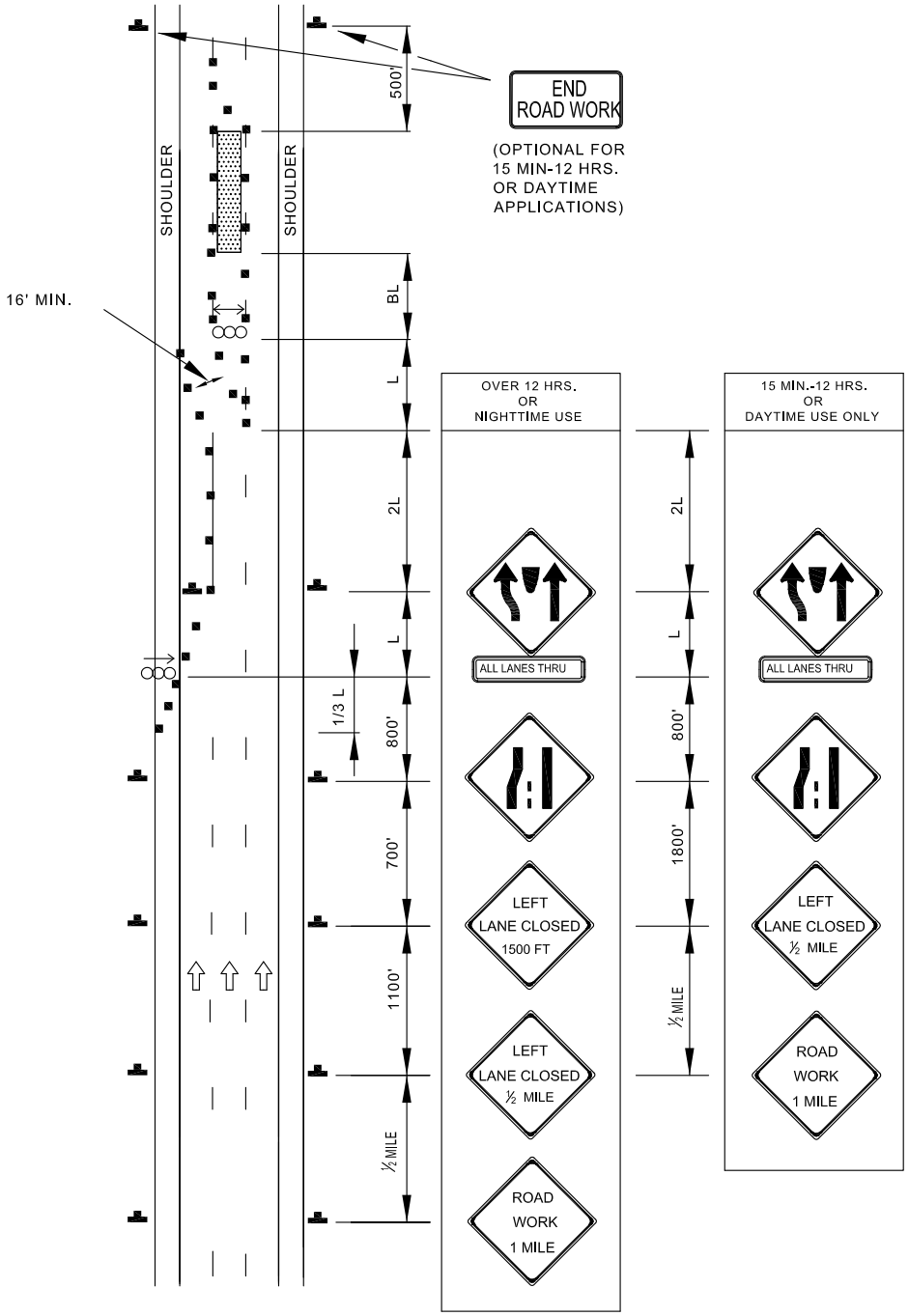

NOTE:

THIS TYPICAL APPLICATION SHOULD GENERALLY BE USED ONLY WHEN WORKERS ARE NOT PRESENT IN THE CENTER LANE. WHEN WORKERS ARE PRESENT IN THE CENTER LANE, EITHER TEMPORARY TRAFFIC BARRIER SHOULD BE USED TO CLOSE THE CENTER LANE OR A TWO-LANE CLOSURE SHOULD BE USED.

KEY:

- CHANNELIZING DEVICES
- SIGN SUPPORT / FACE OF SIGN
- DIRECTION OF TRAFFIC
- WORK SITE
- ARROW PANEL (WITH DIRECTIONAL ARROW)

APPROVED:

Frank Murphy

DEPUTY DIRECTOR - OPERATIONS

Khalil Zaied

DIRECTOR, DEPARTMENT OF TRANSPORTATION

CITY OF BALTIMORE
DEPARTMENT OF TRANSPORTATION
TRAFFIC DIVISION

ISSUED	REVISED	REVISED
8 / 2010		

CENTER LANE CLOSURE / EXP-FREEWAY GREATER THAN 40 MPH

STANDARD NO.
BC 104.05-10

SCALE : NONE

SHEET 1 OF 1

TEMPORARY TRAFFIC CONTROL TYPICAL APPLICATION

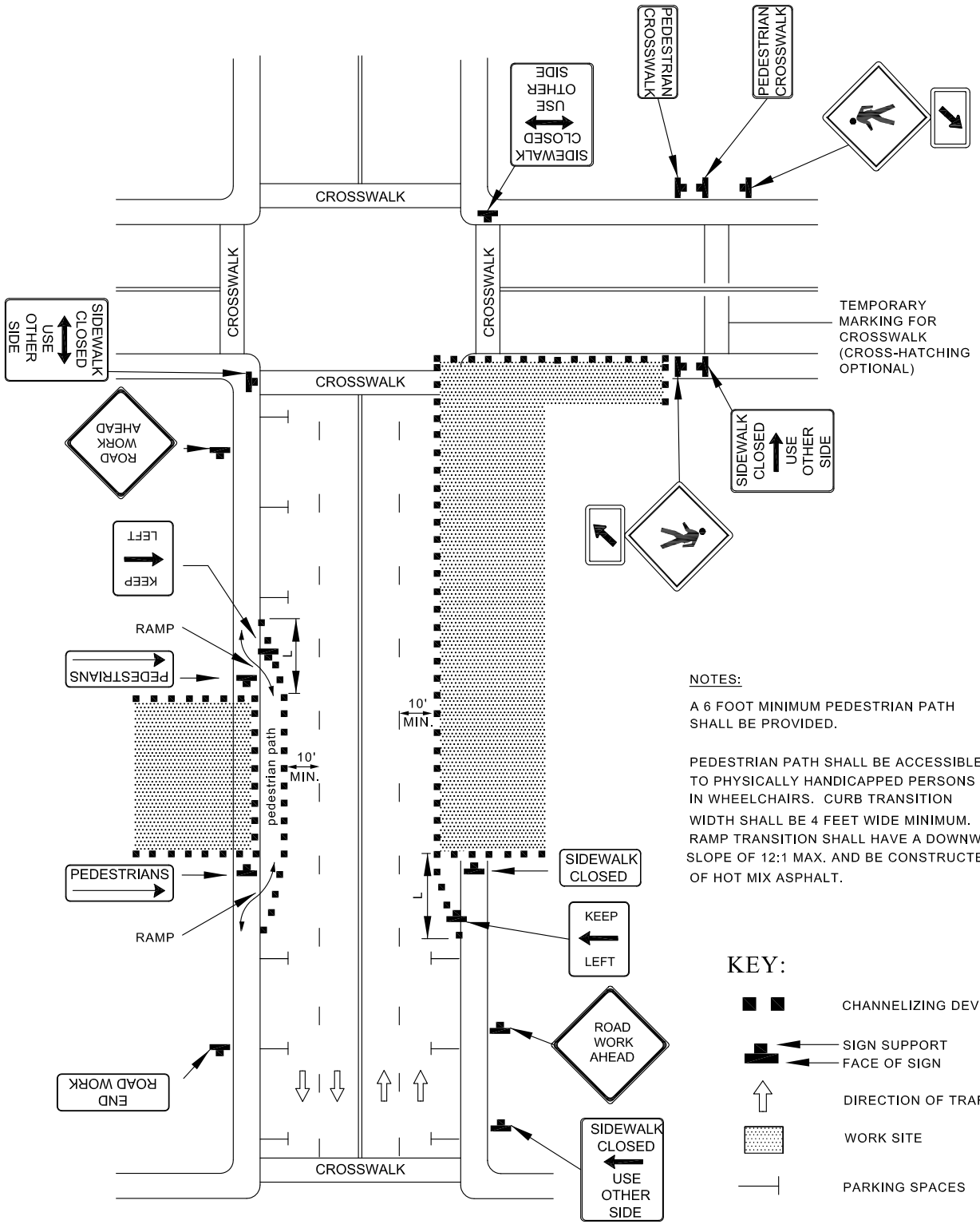

NOTES:

A 6 FOOT MINIMUM PEDESTRIAN PATH SHALL BE PROVIDED.

PEDESTRIAN PATH SHALL BE ACCESSIBLE TO PHYSICALLY HANDICAPPED PERSONS IN WHEELCHAIRS. CURB TRANSITION WIDTH SHALL BE 4 FEET WIDE MINIMUM. RAMP TRANSITION SHALL HAVE A DOWNWARD SLOPE OF 12:1 MAX. AND BE CONSTRUCTED OF HOT MIX ASPHALT.

KEY:

- CHANNELIZING DEVICES
- SIGN SUPPORT / FACE OF SIGN
- DIRECTION OF TRAFFIC
- WORK SITE
- PARKING SPACES

APPROVED:

Frank Murphy

DEPUTY DIRECTOR - OPERATIONS

Khalil Zaied

DIRECTOR, DEPARTMENT OF TRANSPORTATION

CITY OF BALTIMORE
DEPARTMENT OF TRANSPORTATION
TRAFFIC DIVISION

ISSUED	REVISED	REVISED
8 / 2010		

PEDESTRIAN AND CURB LANE CONTROL / MULTILANE UNDIVIDED ALL SPEEDS / OVER 12 HRS. OR NIGHTTIME USE

STANDARD NO.
BC 104.06-5

SCALE : NONE

SHEET 1 OF 1

TEMPORARY TRAFFIC CONTROL TYPICAL APPLICATION

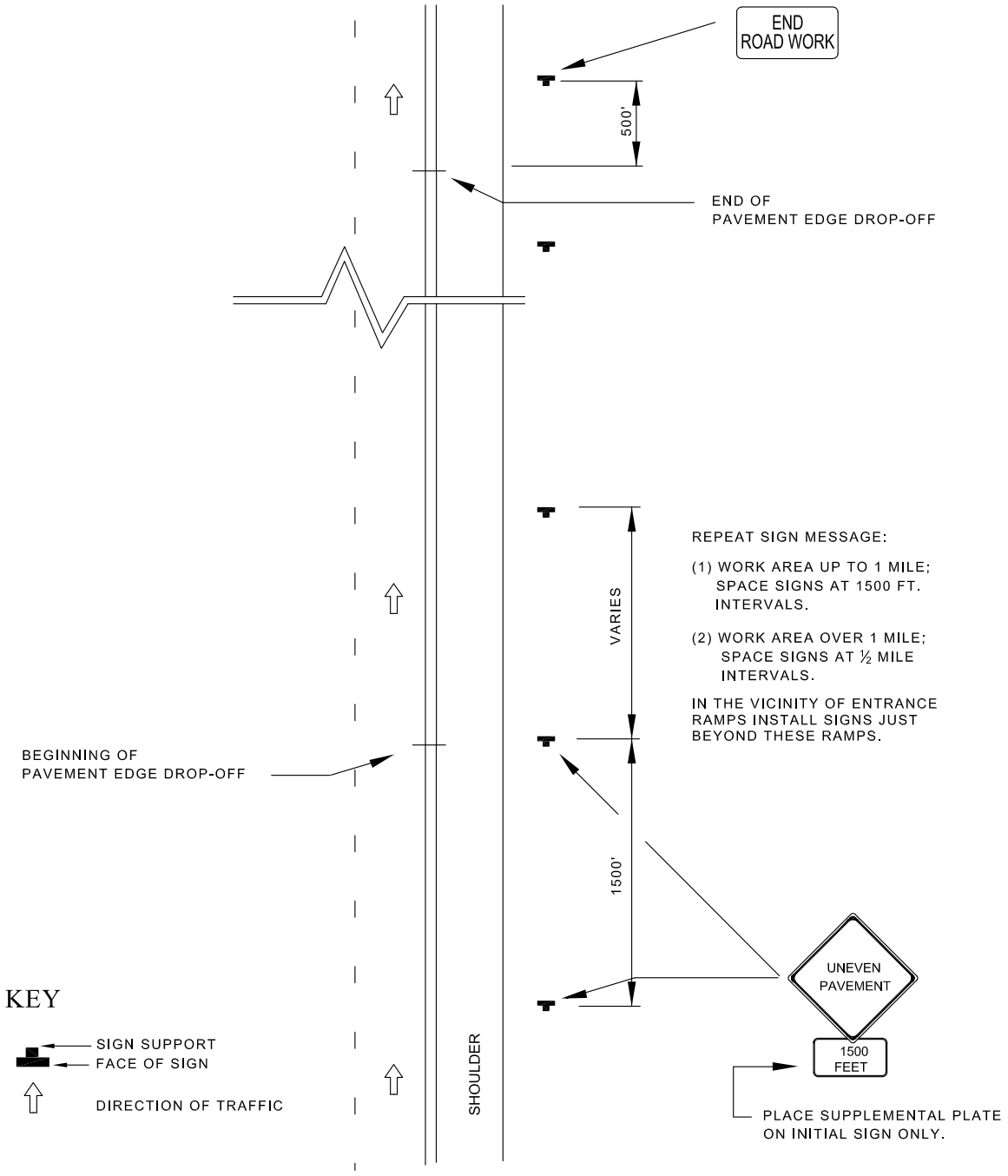

APPROVED:

Frank Murphy

DEPUTY DIRECTOR - OPERATIONS

Khalil Zaied

DIRECTOR, DEPARTMENT OF TRANSPORTATION

CITY OF BALTIMORE
DEPARTMENT OF TRANSPORTATION
TRAFFIC DIVISION

ISSUED	REVISED	REVISED
8 / 2010		

PAVEMENT EDGE DROP-OFF 2.5 INCHES OR LESS (BETWEEN TRAFFIC LANES AND SHOULDER)

STANDARD NO.
BC 104.06-12

SCALE : NONE

SHEET 1 OF 1

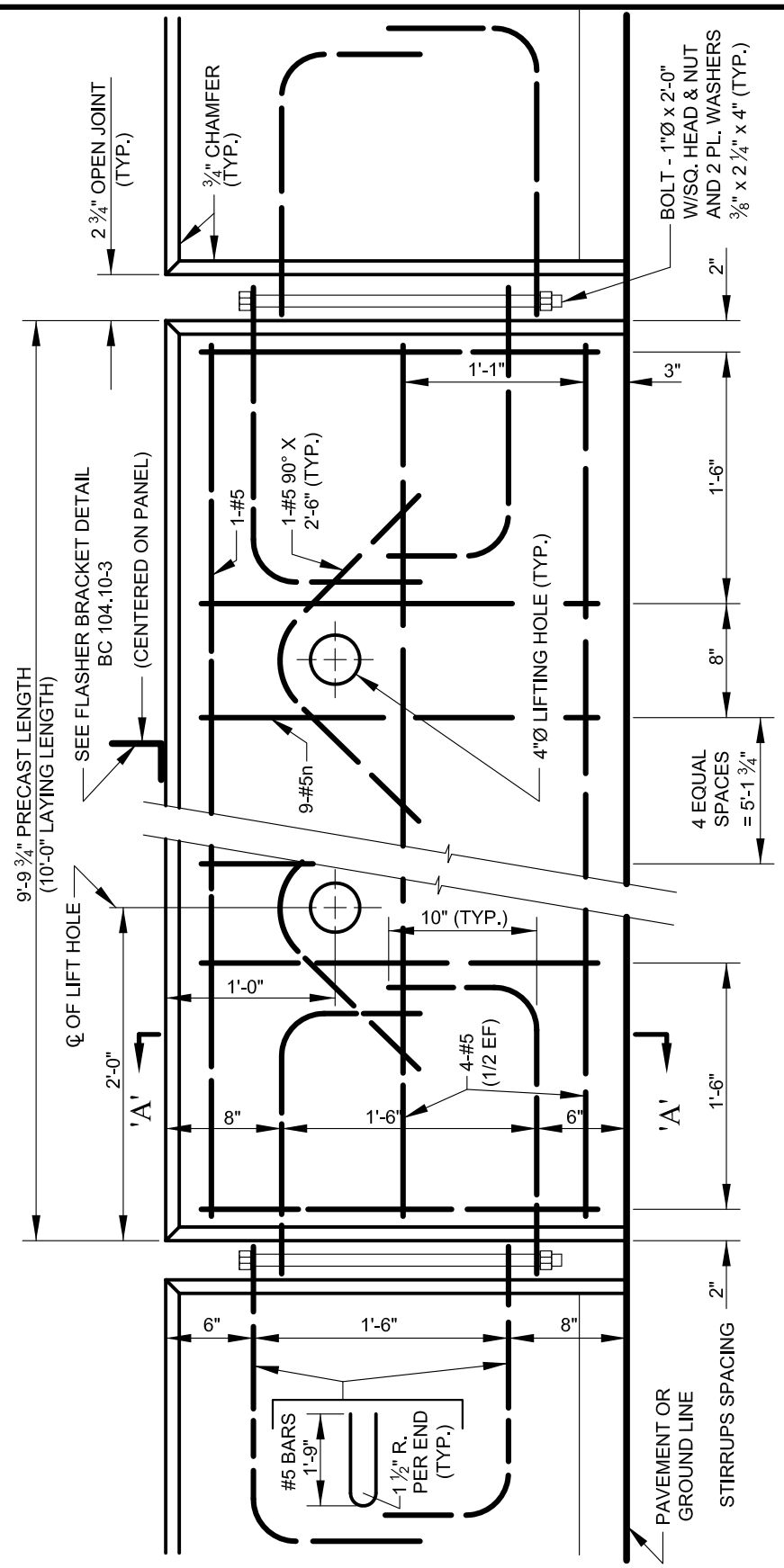

TYPICAL - PRECAST PANEL

NOTE: SPECIAL TREATMENT MAY BE REQUIRED WHEN PANELS ARE USED ON BRIDGE DECKS

APPROVED:

Frank Murphy

DEPUTY DIRECTOR - OPERATIONS

Khalil Zaied

DIRECTOR, DEPARTMENT OF TRANSPORTATION

CITY OF BALTIMORE
DEPARTMENT OF TRANSPORTATION
TRAFFIC DIVISION

PRECAST CONCRETE BARRIER (TYPICAL PANEL)

ISSUED	REVISED	REVISED
8 / 2010		

STANDARD NO.
BC 104.10-1

SCALE : NONE

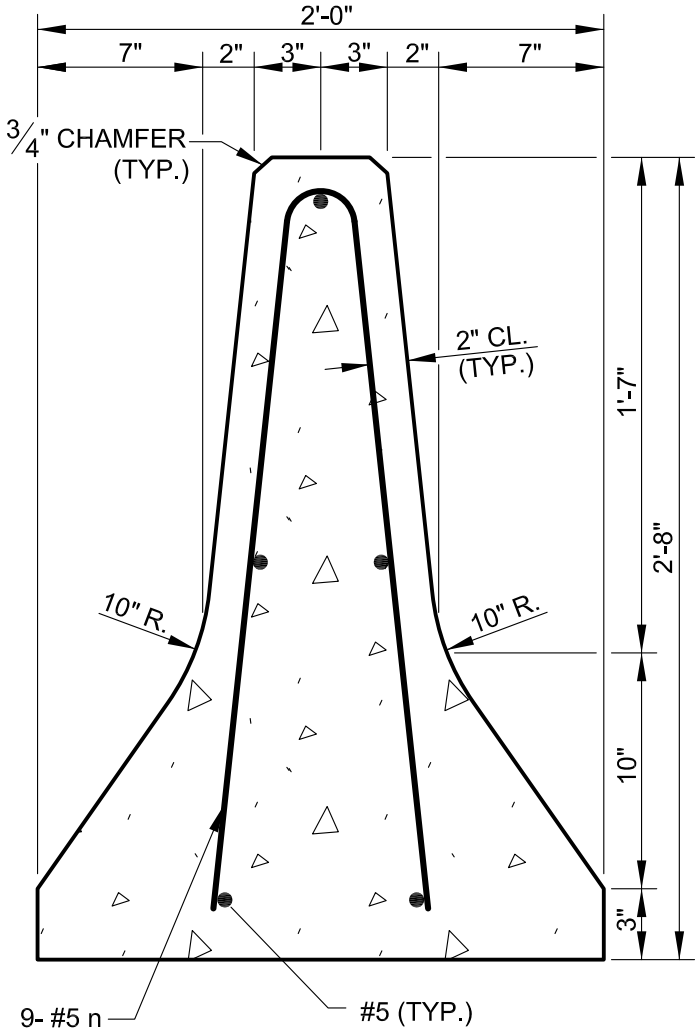

SECTION A-A

(SEE BC 104.10 - 1 of 3)

CITY OF BALTIMORE 1797

APPROVED :

Frank M. Murphy

DEPUTY DIRECTOR - OPERATIONS

Khalil Zaied

DIRECTOR, DEPARTMENT OF TRANSPORTATION

CITY OF BALTIMORE
DEPARTMENT OF TRANSPORTATION
TRAFFIC DIVISION

PRECAST CONCRETE BARRIER (SECTION A-A)

ISSUED	REVISED	REVISED
8 / 2010		

STANDARD NO. BC 104.10-2

SCALE : NONE

SHEET 2 OF 3

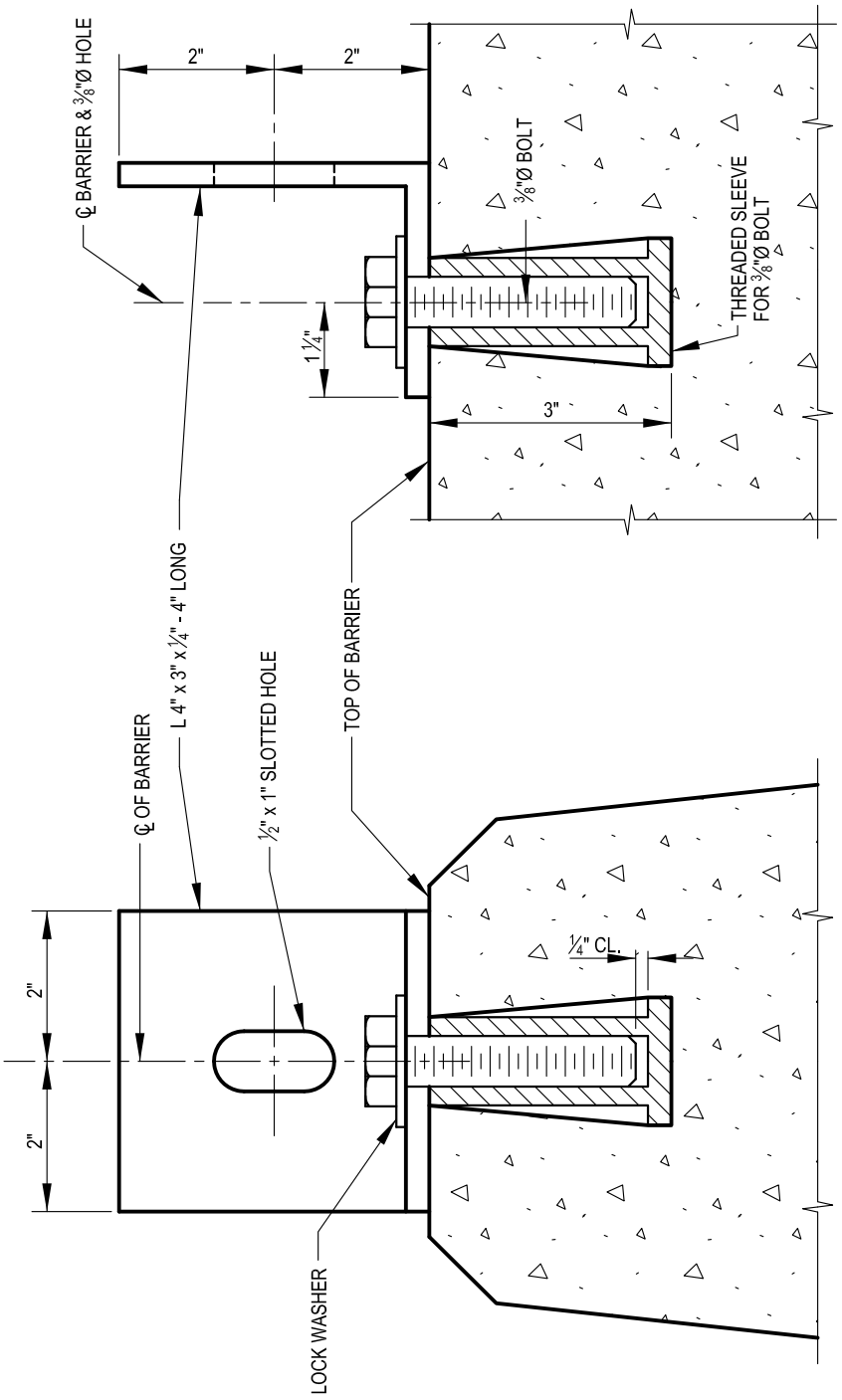

FLASHER BRACKET DETAILS

CITY OF BALTIMORE	APPROVED: Frank Murphy DEPUTY DIRECTOR - OPERATIONS Khalil Zaied DIRECTOR, DEPARTMENT OF TRANSPORTATION	CITY OF BALTIMORE DEPARTMENT OF TRANSPORTATION TRAFFIC DIVISION	ISSUED: 8 / 2010	REVISED / REVISED
		PRECAST CONCRETE BARRIER FLASHER BRACKET DETAILS	STANDARD NO. BC 104.10-3	
			SCALE : NONE	SHEET 3 OF 3

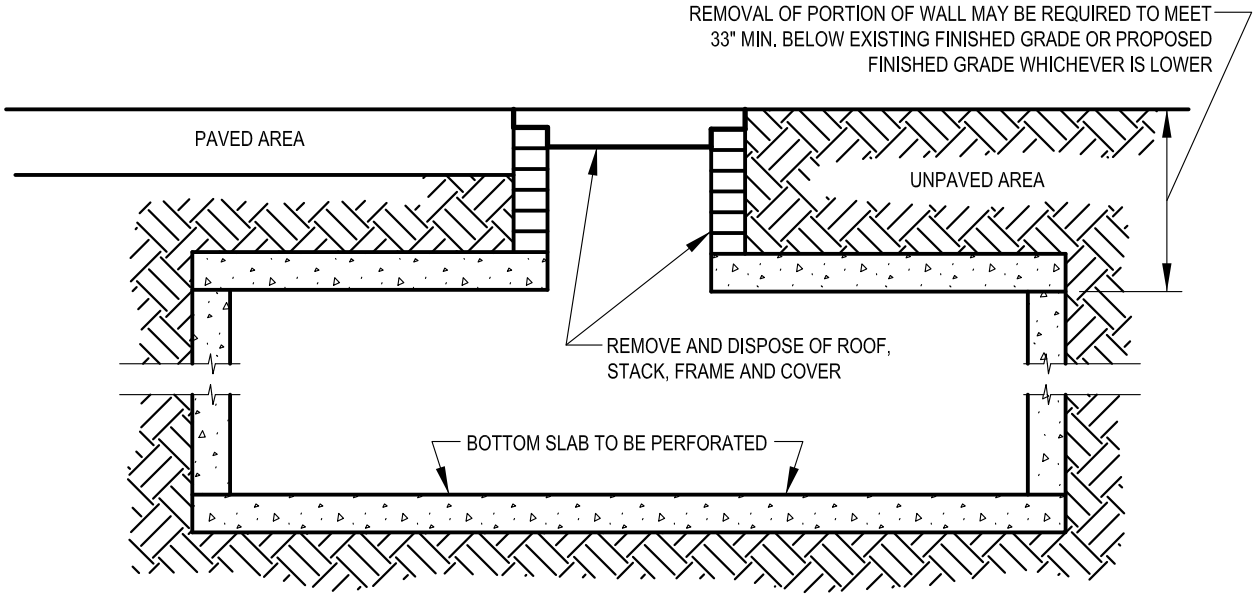

NOTE:
ABANDONED MANHOLES, INLETS, AND/ OR VAULTS
SHALL BE BACKFILLED AND PAVED IN ACCORDANCE
WITH STANDARD PLATES NO. BC 576.18, BC 576.19,
AND BC 576.20

APPROVED :

Frank Murphy

DEPUTY DIRECTOR - OPERATIONS

Khalil Zaied

DIRECTOR, DEPARTMENT OF TRANSPORTATION

CITY OF BALTIMORE
DEPARTMENT OF TRANSPORTATION
TRAFFIC DIVISION

TREATMENT FOR ABANDONED MANHOLES

ISSUED	REVISED	REVISED
8 / 2010		

STANDARD NO.
BC 105.01

SCALE : NONE

SHEET 1 OF 1

NOTED

REFER TO BC 104.01-4 FOR SIGN SPACING, TAPER AND BUFFER LENGTHS

ALL WORK ACTIVITY TO BE OFF THE TRAVELED PORTION OF ROADWAY

THE WORK AREA AHEAD SIGN SHOULD BE REPLACED WITH SHOULDER WORK SIGN FOR WORK SITE LOCATIONS ON THE SHOULDER

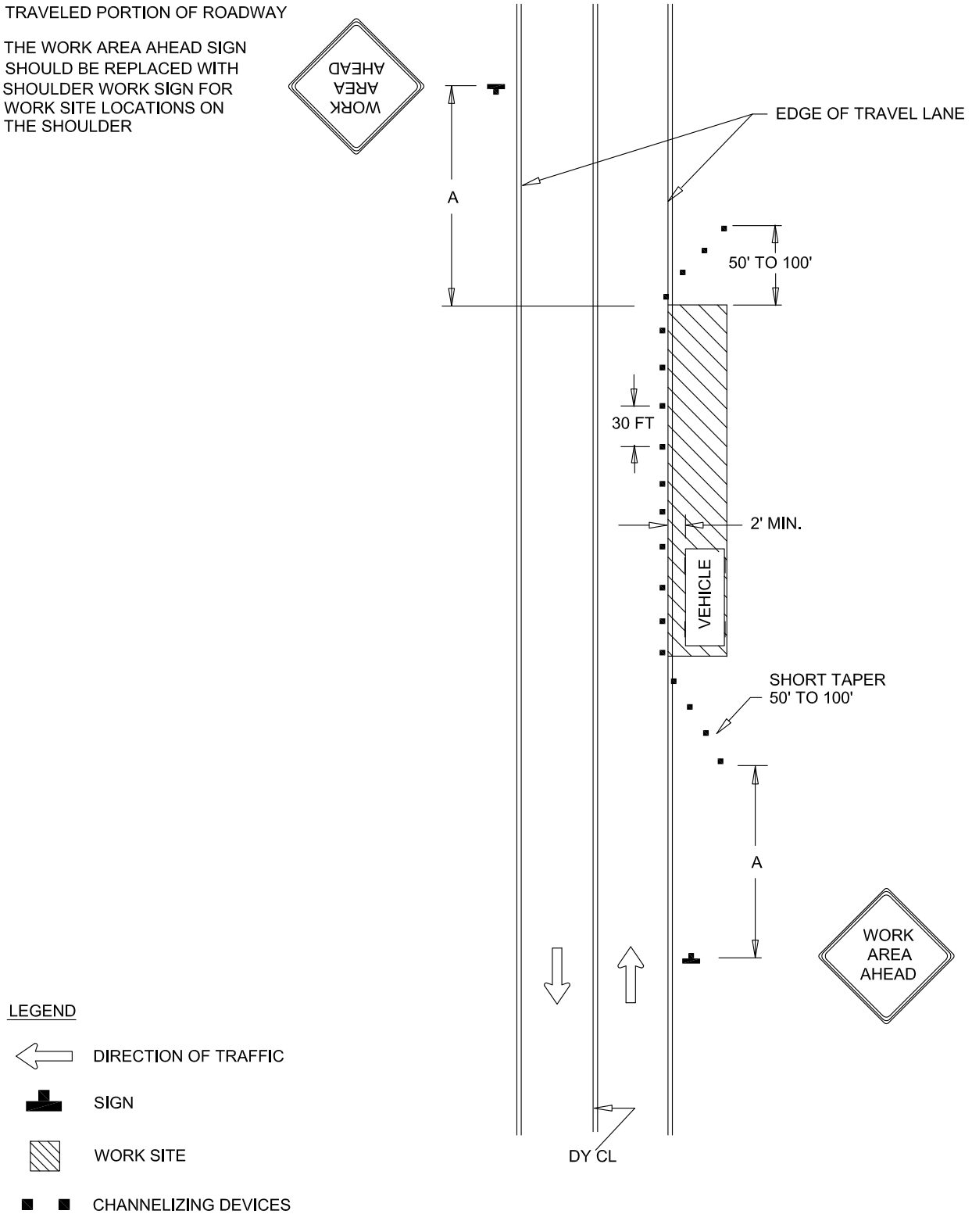

LEGEND

- DIRECTION OF TRAFFIC
- SIGN
- WORK SITE
- CHANNELIZING DEVICES

APPROVED:

Frank Murphy

DEPUTY DIRECTOR - OPERATIONS

Khalil Zaied

DIRECTOR, DEPARTMENT OF TRANSPORTATION

CITY OF BALTIMORE
DEPARTMENT OF TRANSPORTATION
TRAFFIC DIVISION

TRAFFIC CONTROL FOR WORK ACTIVITY OFF THE ROAD

ISSUED	REVISED	REVISED
8 / 2010		

STANDARD NO.
BC 111.01

SCALE : NONE

SHEET 1 OF 1

NOTED

REFER TO BC 104.01-4 FOR SIGN SPACING, TAPER AND BUFFER LENGTHS

THIS FIGURE SHOULD BE USED WHERE PARKING AREAS ADJACENT TO TRAVEL LANES ARE CLOSED.

THIS FIGURE APPLIES ONLY TO SITUATIONS WHERE LANE WIDTHS ARE REDUCED BUT NOT SHIFTED ACROSS THE EXISTING CENTERLINE.

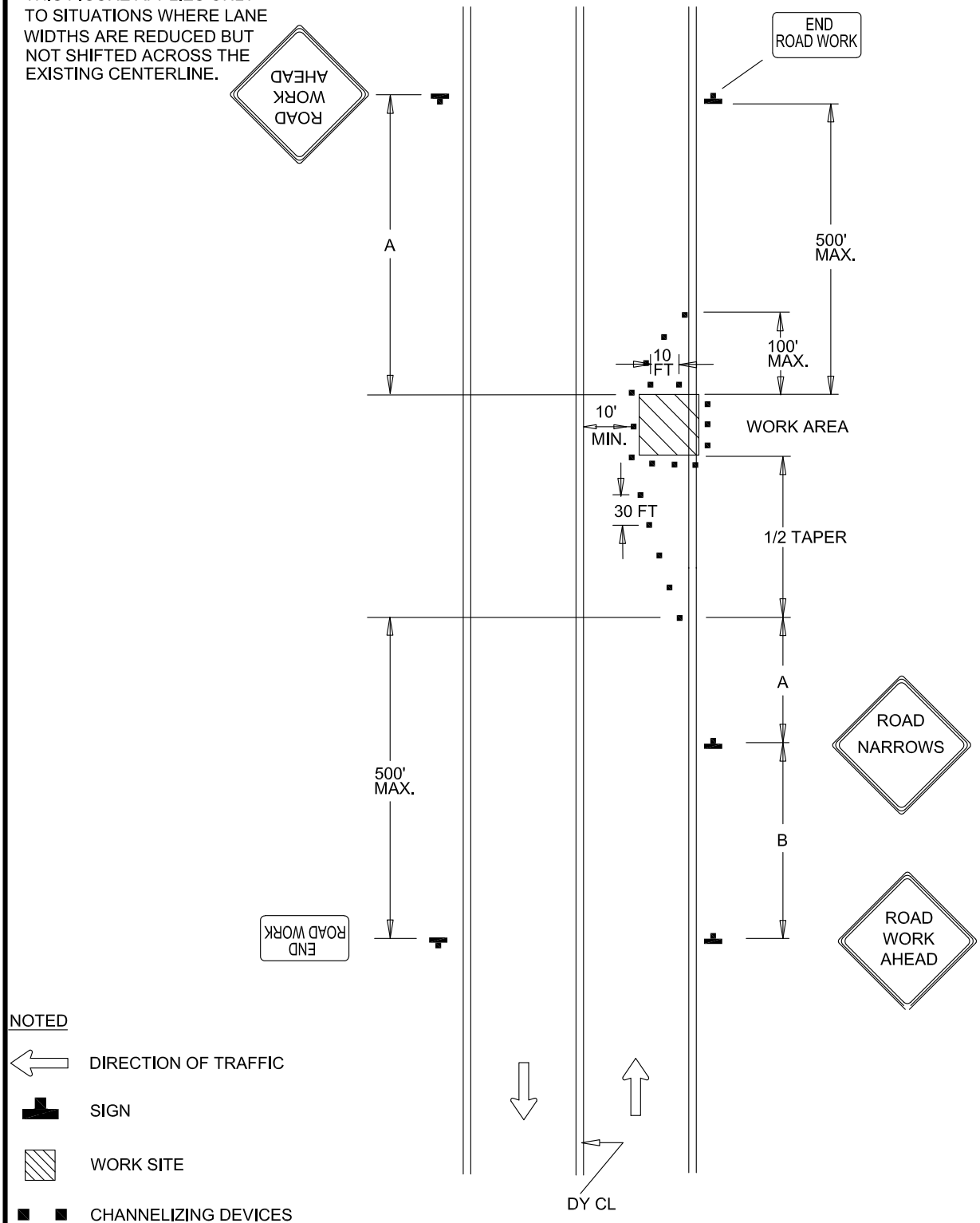

NOTED

DIRECTION OF TRAFFIC

SIGN

WORK SITE

CHANNELIZING DEVICES

APPROVED:

Frank Murphy

DEPUTY DIRECTOR - OPERATIONS

Khalil Zaied

DIRECTOR, DEPARTMENT OF TRANSPORTATION

CITY OF BALTIMORE
DEPARTMENT OF TRANSPORTATION
TRAFFIC DIVISION

ISSUED	REVISED	REVISED
8 / 2010		

TRAFFIC CONTROL FOR PARTIAL LANE CLOSURE

STANDARD NO.
BC 112.01

SCALE : NONE

SHEET 1 OF 1

NOTED

REFER TO BC 104.01-4 FOR SIGN SPACING, TAPER AND BUFFER LENGTHS LENGTHS

FOR A TYPICAL 2 LEFT LANES CLOSURE THE CHANNELIZING DEVICES SHALL BE SET UP SYMMETRICALLY TO THE 2 RIGHT LANES CLOSURE SETUP AND THE SIGNING SHALL REFLECT THE 2 LEFT LANES CLOSURE.

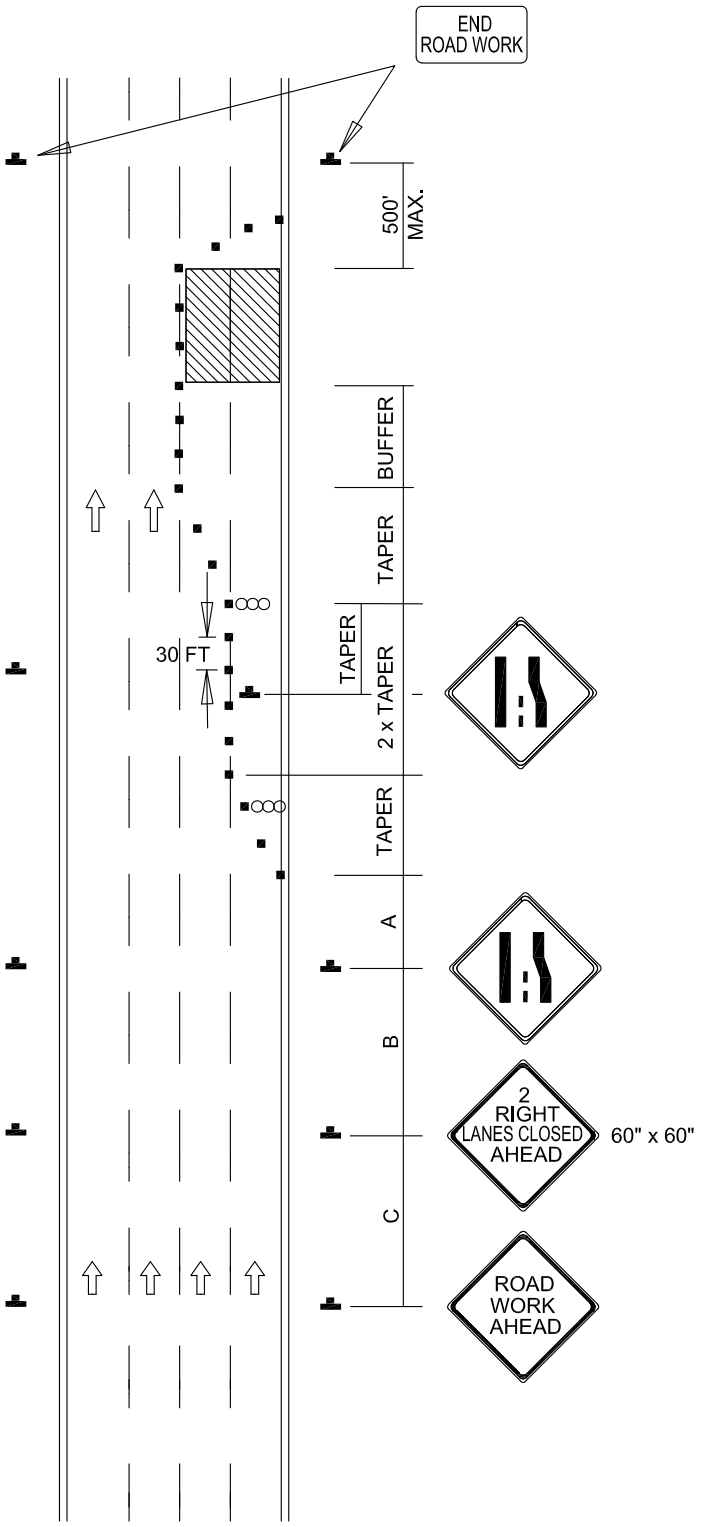

LEGEND

- CHANNELIZING DEVICES
- SIGN
- DIRECTION OF TRAFFIC
- WORK SITE
- ARROW PANEL

APPROVED :

Frank Murphy

DEPUTY DIRECTOR - OPERATIONS

Khalil Zaied

DIRECTOR, DEPARTMENT OF TRANSPORTATION

CITY OF BALTIMORE
DEPARTMENT OF TRANSPORTATION
TRAFFIC DIVISION

2 RIGHT (LEFT) LANES CLOSURE / DIVIDED UNCONTROLLED

ISSUED	REVISED	REVISED
8 / 2010		

STANDARD NO.
BC 112.02

SCALE : NONE

SHEET 1 OF 1

NOTES

REFER TO BC 104.01-4 FOR SIGN SPACING, TAPER AND BUFFER LENGTHS

ACCESS POINTS WITHIN LANE CLOSURE SHALL BE CONTROLLED BY FLAGGER(S)

ARROW PANEL DISPLAYS TO BE SET ON CAUTION MODE.

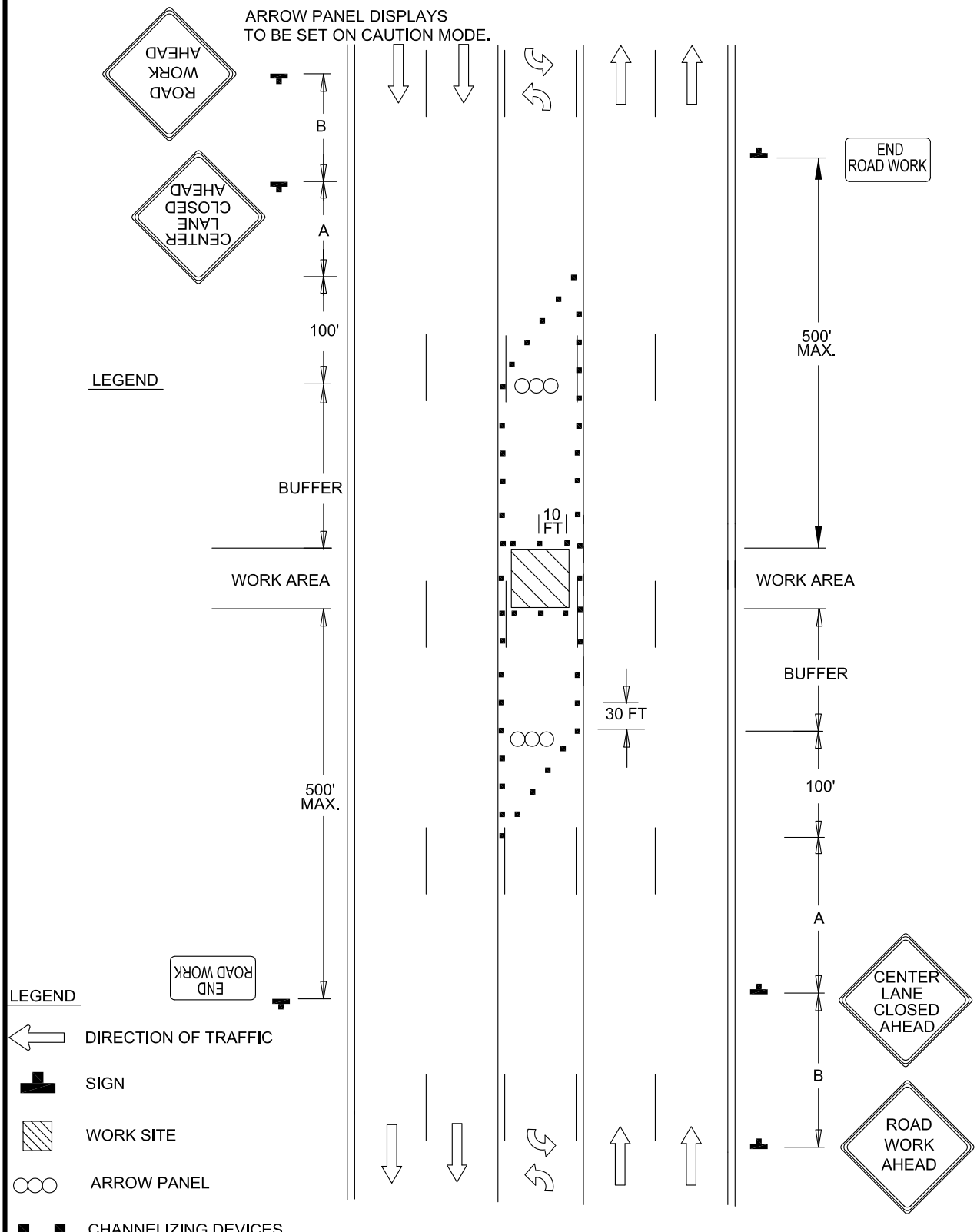

APPROVED:

Frank Murphy

DEPUTY DIRECTOR - OPERATIONS

Khalil Zaied

DIRECTOR, DEPARTMENT OF TRANSPORTATION

CITY OF BALTIMORE
DEPARTMENT OF TRANSPORTATION
TRAFFIC DIVISION

ISSUED	REVISED	REVISED
8 / 2010		

TRAFFIC CONTROL FOR TWO-WAY LEFT TURN LANE CLOSURE

STANDARD NO.
BC 114.01

SCALE : NONE

SHEET 1 OF 1

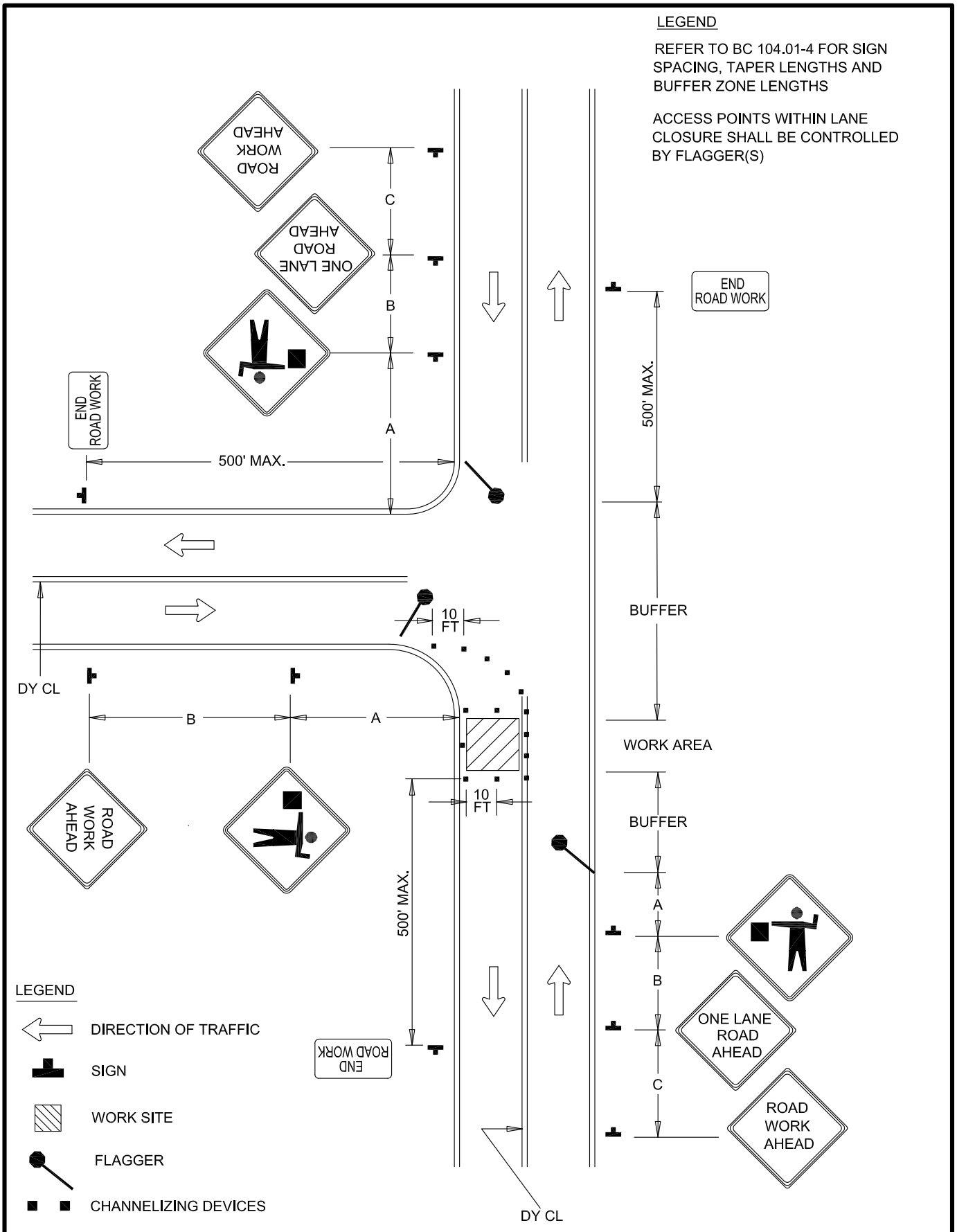

APPROVED:

Frank Murphy

DEPUTY DIRECTOR - OPERATIONS

Khalil Zaied

DIRECTOR, DEPARTMENT OF TRANSPORTATION

CITY OF BALTIMORE
DEPARTMENT OF TRANSPORTATION
TRAFFIC DIVISION

ISSUED	REVISED	REVISED
8 / 2010		

FLAGGING CONTROL AT 3- LEG INTERSECTION (1)

STANDARD NO.
BC 115.01

SCALE : NONE

SHEET 1 OF 1

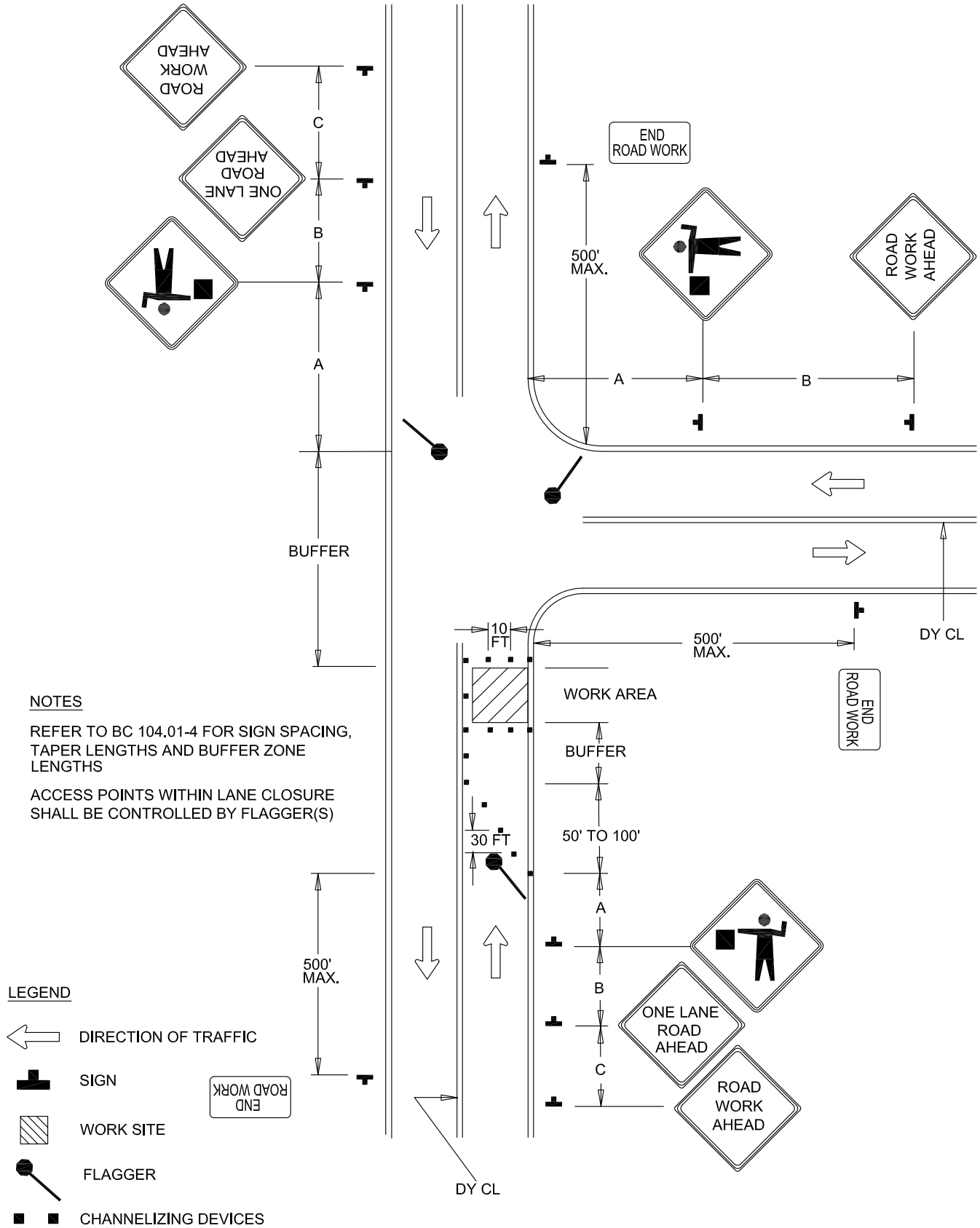

NOTES

REFER TO BC 104.01-4 FOR SIGN SPACING, TAPER LENGTHS AND BUFFER ZONE LENGTHS

ACCESS POINTS WITHIN LANE CLOSURE SHALL BE CONTROLLED BY FLAGGER(S)

LEGEND

- DIRECTION OF TRAFFIC
- SIGN
- WORK SITE
- FLAGGER
- CHANNELIZING DEVICES

APPROVED:

Frank Murphy

DEPUTY DIRECTOR - OPERATIONS

Khalil Zaied

DIRECTOR, DEPARTMENT OF TRANSPORTATION

CITY OF BALTIMORE
DEPARTMENT OF TRANSPORTATION
TRAFFIC DIVISION

ISSUED	REVISED	REVISED
8 / 2010		

FLAGGING CONTROL AT 3 - LEG INTERSECTION (2)

STANDARD NO.
BC 115.02

SCALE : NONE

SHEET 1 OF 1

NOTES

REFER TO BC 104.01-4 FOR SIGN SPACING, TAPER LENGTHS AND BUFFER ZONE LENGTHS

ACCESS POINTS WITHIN LANE CLOSURE SHALL BE CONTROLLED BY FLAGGER(S)

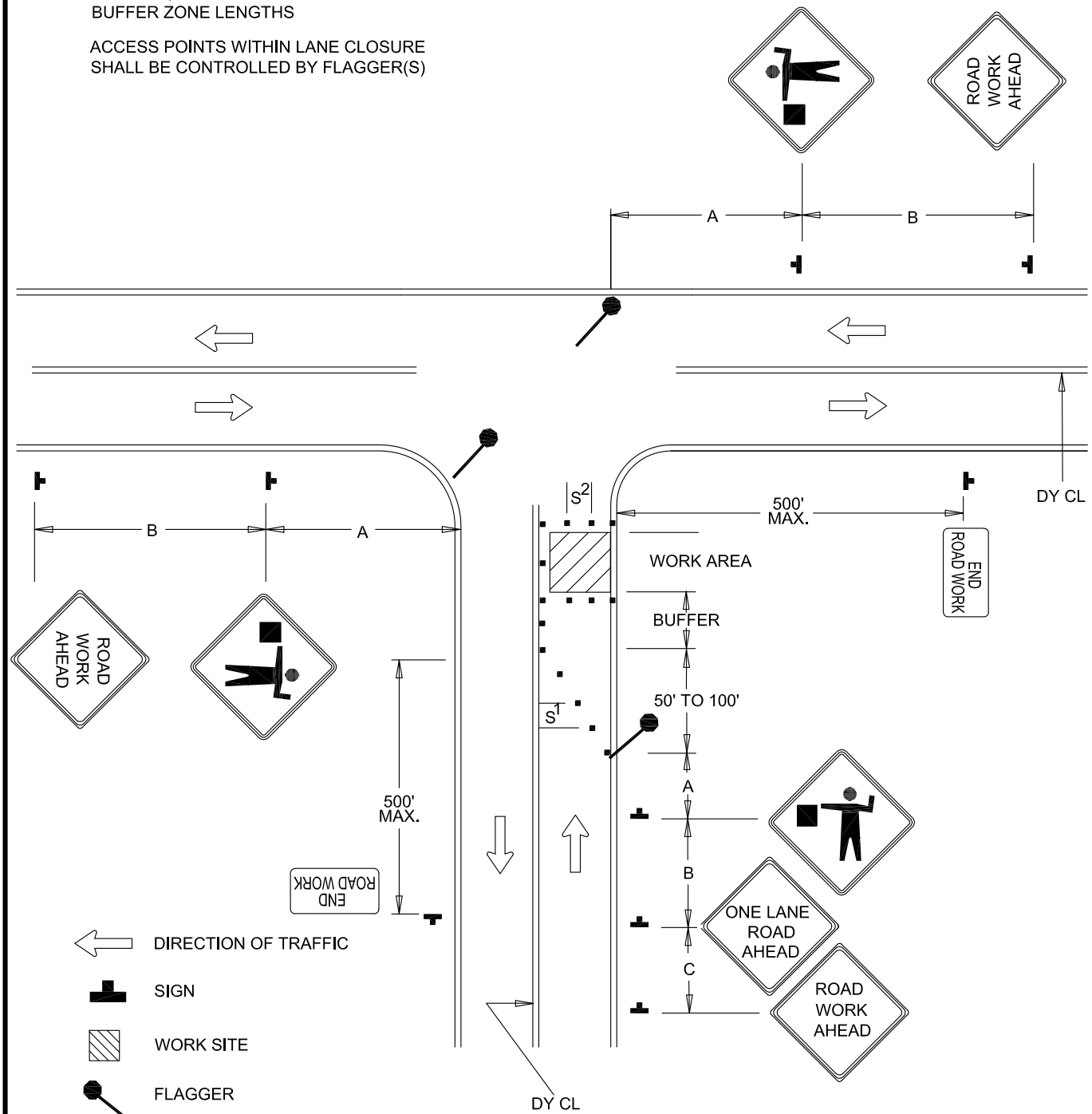

S^1=30 FT.

S^2=10 FT.

APPROVED:

Frank Murphy

DEPUTY DIRECTOR - OPERATIONS

Khalil Zaied

DIRECTOR, DEPARTMENT OF TRANSPORTATION

CITY OF BALTIMORE
DEPARTMENT OF TRANSPORTATION
TRAFFIC DIVISION

ISSUED	REVISED	REVISED
8 / 2010	-	

FLAGGING CONTROL AT 3 - LEG INTERSECTION (3)

STANDARD NO.
BC 115.03

SCALE : NONE

SHEET 1 OF 1

NOTES
REFER TO BC 104.01-4 FOR SIGN SPACING, TAPER LENGTHS AND BUFFER ZONE LENGTHS

ACCESS POINTS WITHIN LANE CLOSURE SHALL BE CONTROLLED BY FLAGGER(S)

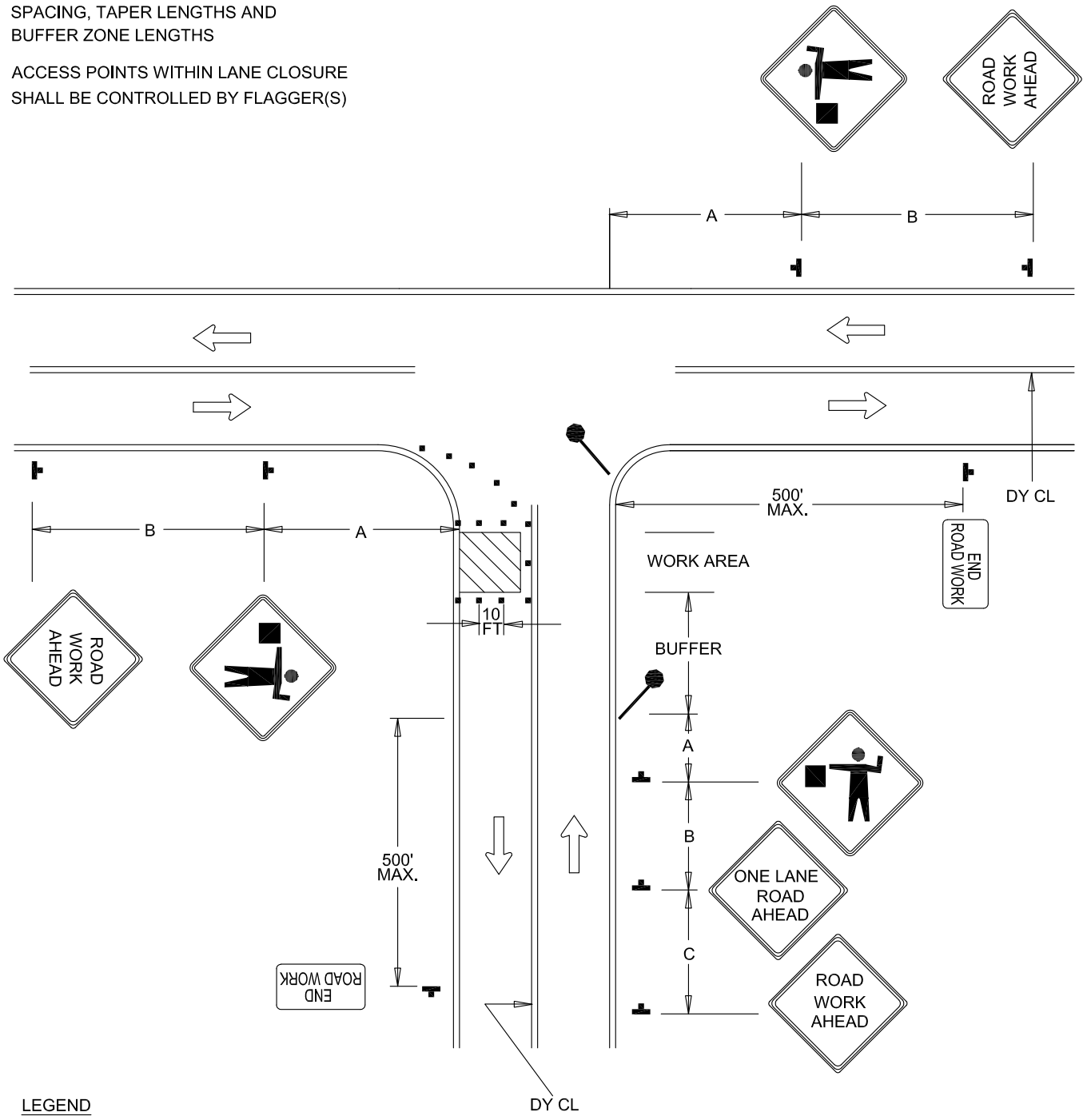

LEGEND

- DIRECTION OF TRAFFIC
- SIGN
- WORK SITE
- FLAGGER
- CHANNELIZING DEVICES

APPROVED:

Frank Murphy

DEPUTY DIRECTOR - OPERATIONS

Khalil Zaied

DIRECTOR, DEPARTMENT OF TRANSPORTATION

CITY OF BALTIMORE
DEPARTMENT OF TRANSPORTATION
TRAFFIC DIVISION

ISSUED	REVISED	REVISED
8 / 2010		

FLAGGING CONTROL AT 3 - LEG INTERSECTION (4)

STANDARD NO.
BC 115.04

SCALE : NONE

SHEET 1 OF 1

NOTES

REFER TO BC 104.01-4 FOR SIGN SPACING, TAPER LENGTHS AND BUFFER LENGTHS

ACCESS POINTS WITHIN LANE CLOSURE SHALL BE CONTROLLED BY FLAGGER(S)

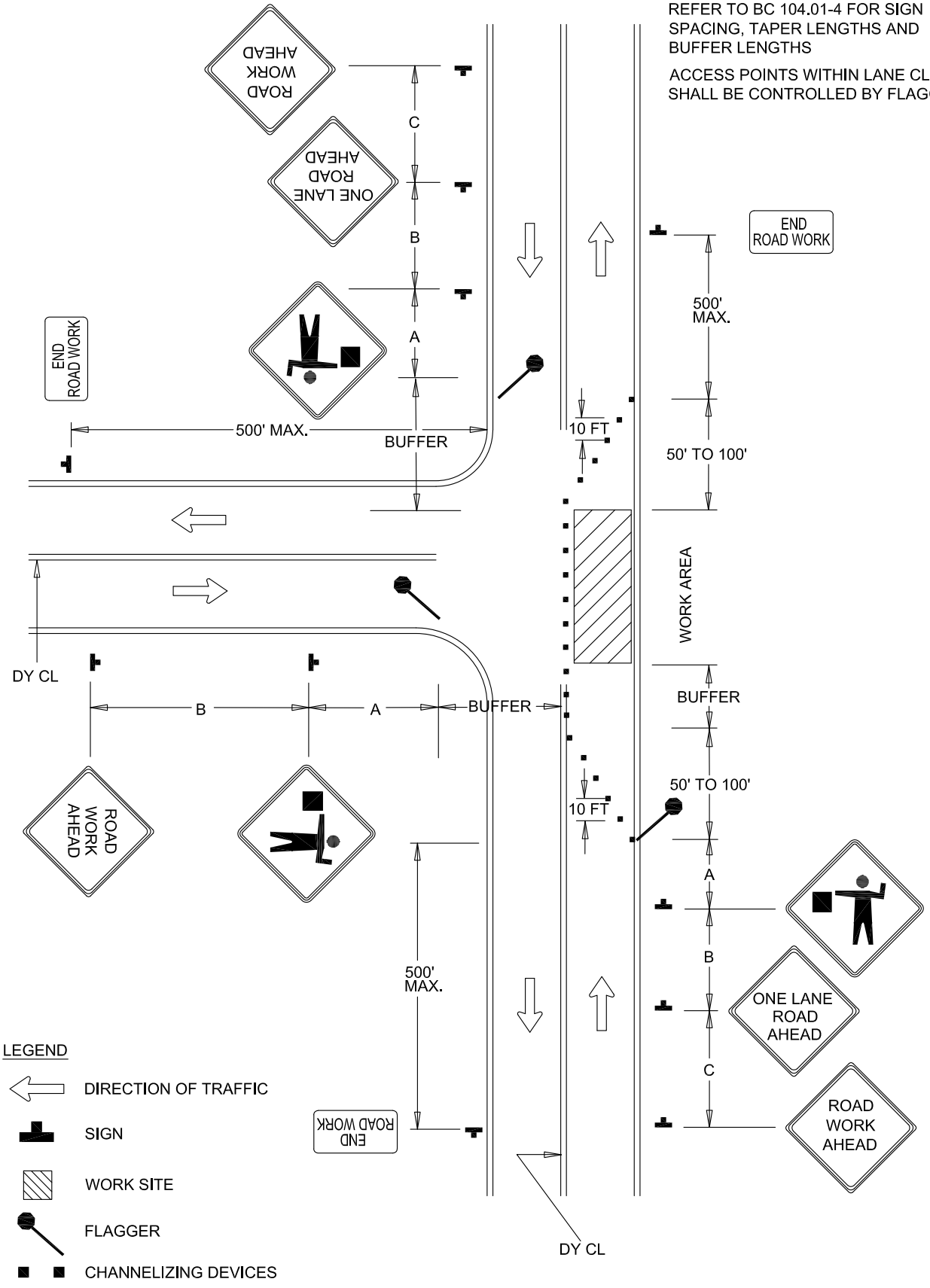

LEGEND

- DIRECTION OF TRAFFIC
- SIGN
- WORK SITE
- FLAGGER
- CHANNELIZING DEVICES

APPROVED:

Frank Murphy

DEPUTY DIRECTOR - OPERATIONS

Khalil Zaied

DIRECTOR, DEPARTMENT OF TRANSPORTATION

CITY OF BALTIMORE
DEPARTMENT OF TRANSPORTATION
TRAFFIC DIVISION

ISSUED	REVISED	REVISED
8 / 2010		

FLAGGING CONTROL AT 3 - LEG INTERSECTION FAR - SIDE CLOSURE

STANDARD NO.
BC 115.05

SCALE : NONE

SHEET 1 OF 1

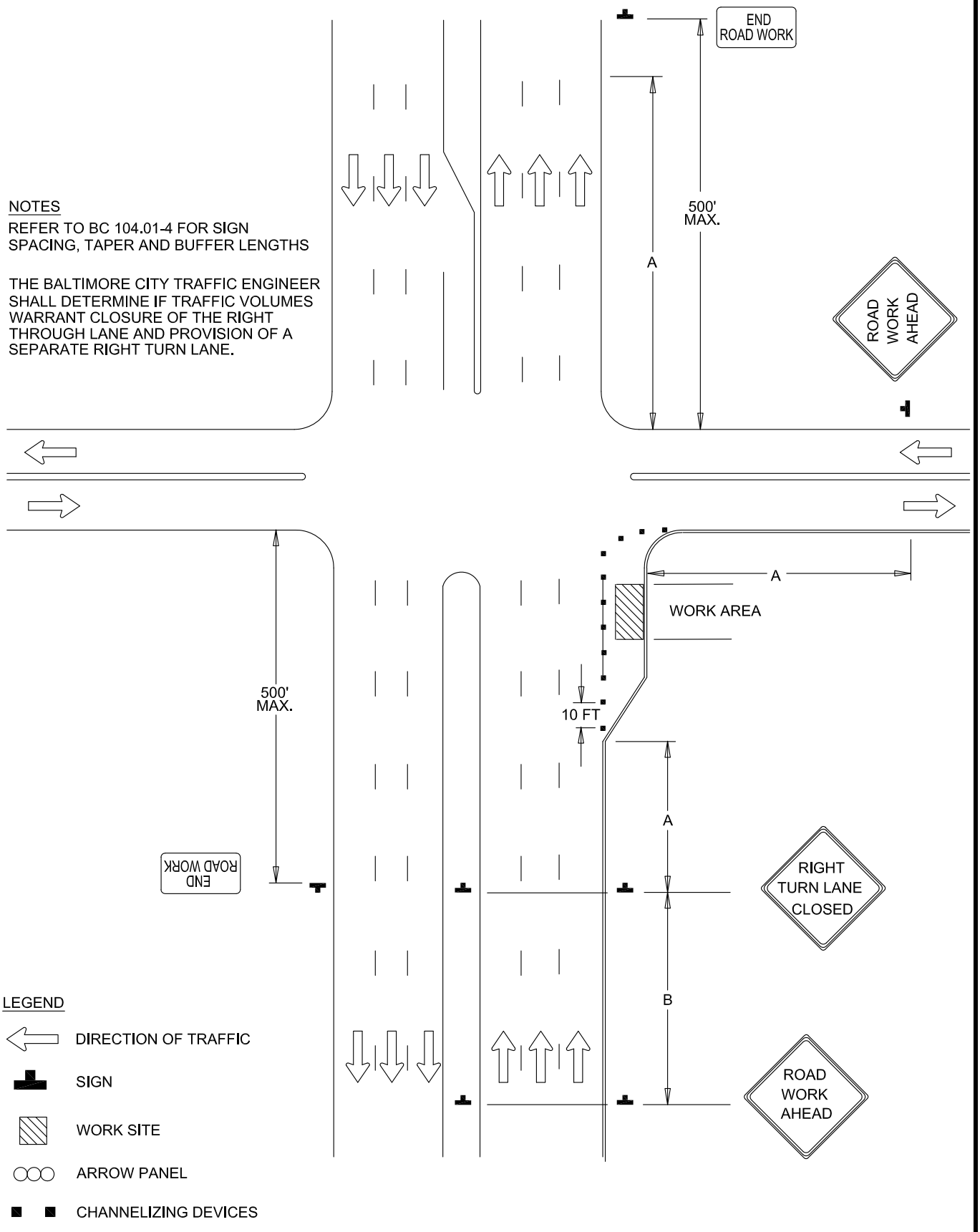

NOTES

REFER TO BC 104.01-4 FOR SIGN SPACING, TAPER AND BUFFER LENGTHS

THE BALTIMORE CITY TRAFFIC ENGINEER SHALL DETERMINE IF TRAFFIC VOLUMES WARRANT CLOSURE OF THE RIGHT THROUGH LANE AND PROVISION OF A SEPARATE RIGHT TURN LANE.

LEGEND

- DIRECTION OF TRAFFIC
- SIGN
- WORK SITE
- ARROW PANEL
- CHANNELIZING DEVICES

APPROVED :

Frank Murphy

DEPUTY DIRECTOR - OPERATIONS

Khalil Zaied

DIRECTOR, DEPARTMENT OF TRANSPORTATION

CITY OF BALTIMORE
DEPARTMENT OF TRANSPORTATION
TRAFFIC DIVISION

ISSUED	REVISED	REVISED
8 / 2010		

TRAFFIC CONTROL FOR RIGHT TURN LANE CLOSURE

STANDARD NO.
BC 116.01

SCALE : NONE

SHEET 1 OF 1

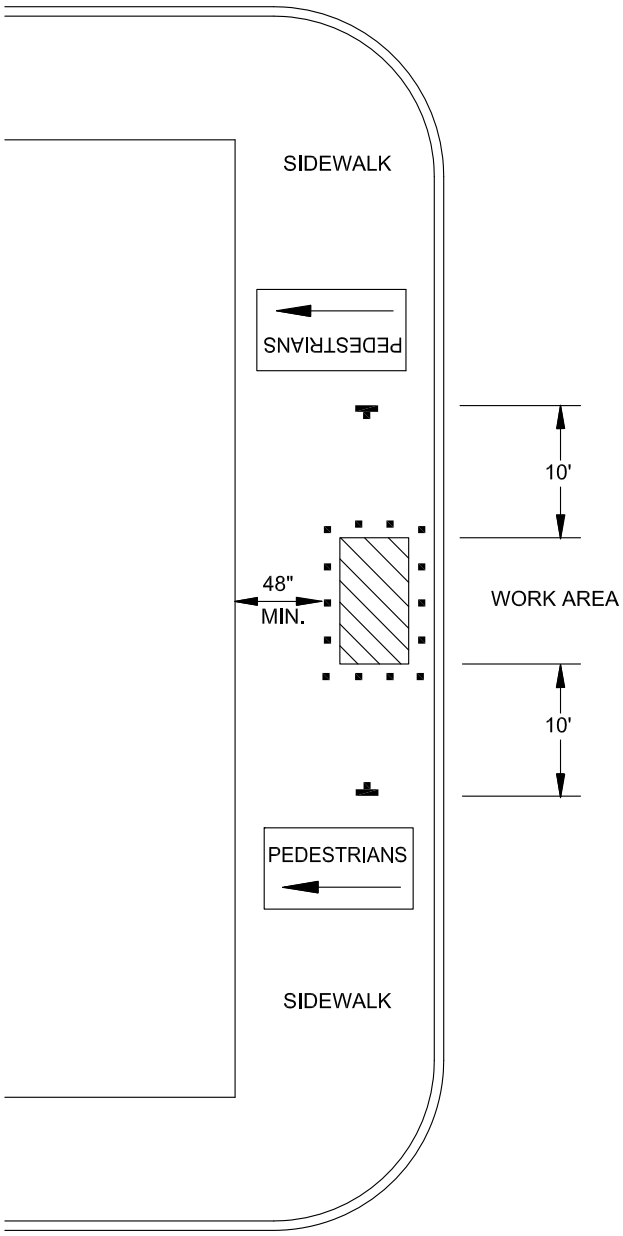

LEGEND

SIGN

WORK SITE

CHANNELIZING DEVICES

APPROVED:

Frank Murphy

DEPUTY DIRECTOR - OPERATIONS

Khalil Zaied

DIRECTOR, DEPARTMENT OF TRANSPORTATION

CITY OF BALTIMORE
DEPARTMENT OF TRANSPORTATION
TRAFFIC DIVISION

PEDESTRIAN CONTROL FOR SIDEWALK BYPASS

ISSUED	REVISED	REVISED
8 / 2010		

STANDARD NO.
BC 117.01

SCALE : NONE

SHEET 1 OF 1

TEMPORARY TRAFFIC CONTROL TYPICAL APPLICATION FOR SIDEWALK CLOSURE ALTERNATE PEDESTRIAN ROUTE USING ROADWAY LANE OR SHOULDER

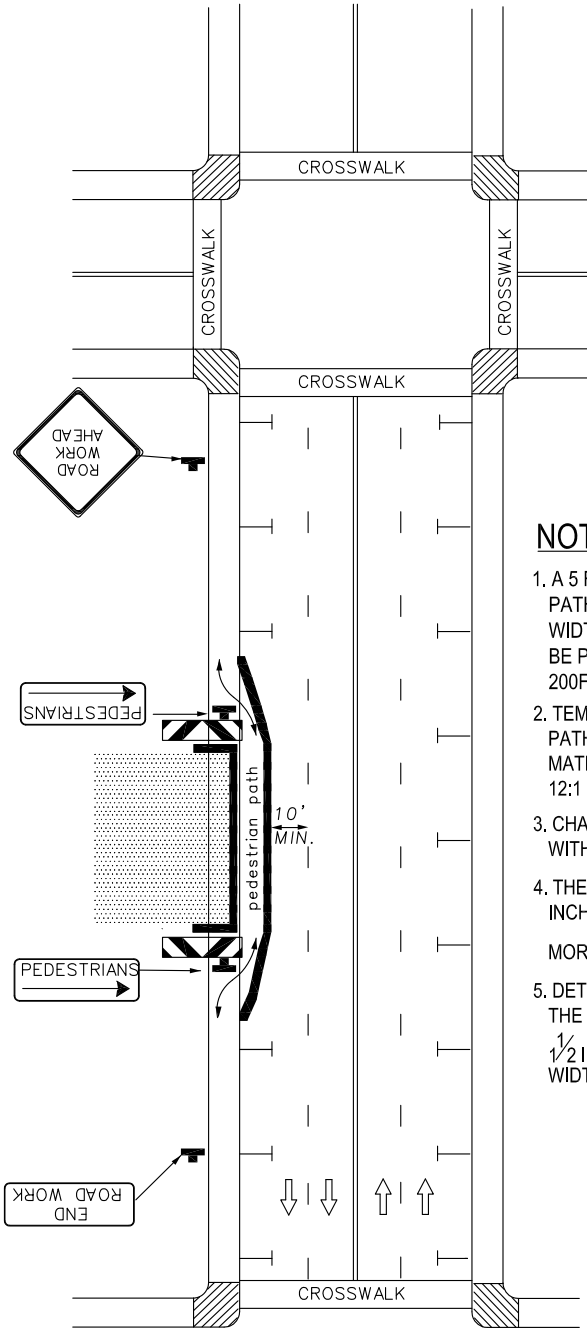

IMPORTANT:
THIS DRAWING SHALL BE USED IN COMBINATION WITH THE GENERAL NOTES BC 104.01-1 THRU BC 104.01-7

NOTES

1. A 5 FOOT MINIMUM WIDTH PEDESTRIAN PATH / ALTERNATE PEDESTRIAN PATH SHALL BE MAINTAINED WHERE POSSIBLE. WHERE A 5 FOOT MIN WIDTH CANNOT BE ACHIEVED, A MINIMUM WIDTH OF 36 INCHES SHALL BE PROVIDED WITH PASSING ZONES (60 IN X 60 IN) AT LEAST EVERY 200FT.
2. TEMPORARY RAMPS SHALL HAVE A SLOPE OF 12:1 MAX. THE PEDESTRIAN PATH AND RAMP SHALL BE CONSTRUCTED OF HOT MIX ASPHALT OR OTHER MATERIAL THAT CAN PROVIDE SMOOTH, HARD SURFACE & WILL MAINTAIN 12:1 SLOPE.
3. CHANNELIZING DEVICES SHALL BE TEMPORARY CONCRETE BARRIERS WITH THE ADDITION OF CONTINUOUS DETECTABLE EDGING.
4. THE CONTINUOUS DETECTABLE EDGINGS SHALL PROTRUDE AT LEAST 6 INCHES ABOVE THE PATHWAY WITH THE BOTTOM OF THE EDGING NO MORE THAN 1½ INCHES ABOVE THE PATHWAY.
5. DETECTABLE BARRICADES SHALL EXTEND AT LEAST 36" ABOVE THE PATHWAY WITH THE BOTTOM OF THE BARRICADE NO MORE THAN 1½ INCHES ABOVE THE PATHWAY, AND SHALL EXTEND THE FULL WIDTH OF THE CLOSURE

KEY:

- SIGN
- CHANNELIZING DEVICES WITH DETECTABLE EDGING
- DETECTABLE BARRICADE
- DIRECTION OF TRAFFIC
- WORK SITE
- PARKING SPACES / SHOULDER AREA
- TEMPORARY RAMP (WITH DETECTABLE SURFACE WARNING)
- EXISTING CURB RAMP

APPROVED :
Frank Murphy
DEPUTY DIRECTOR - OPERATIONS
Khalil Zaied
DIRECTOR, DEPARTMENT OF TRANSPORTATION

CITY OF BALTIMORE
DEPARTMENT OF TRANSPORTATION
TRAFFIC DIVISION

ISSUED	REVISED	REVISED
8 / 2010		

PED AND CURB-LANECONTROL / MULTILANE UNDIVIDED SPEEDS LESS THAN OR EQUAL TO 40 MPH / OVER 12 HRS. OR NIGHTTIME USE

STANDARD NO.
BC 117.01-1

SCALE : NONE | SHEET 1 OF 4

TEMPORARY TRAFFIC CONTROL TYPICAL APPLICATION
ALTERNATE PEDESTRIAN DETOUR ROUTE AT INTERSECTION

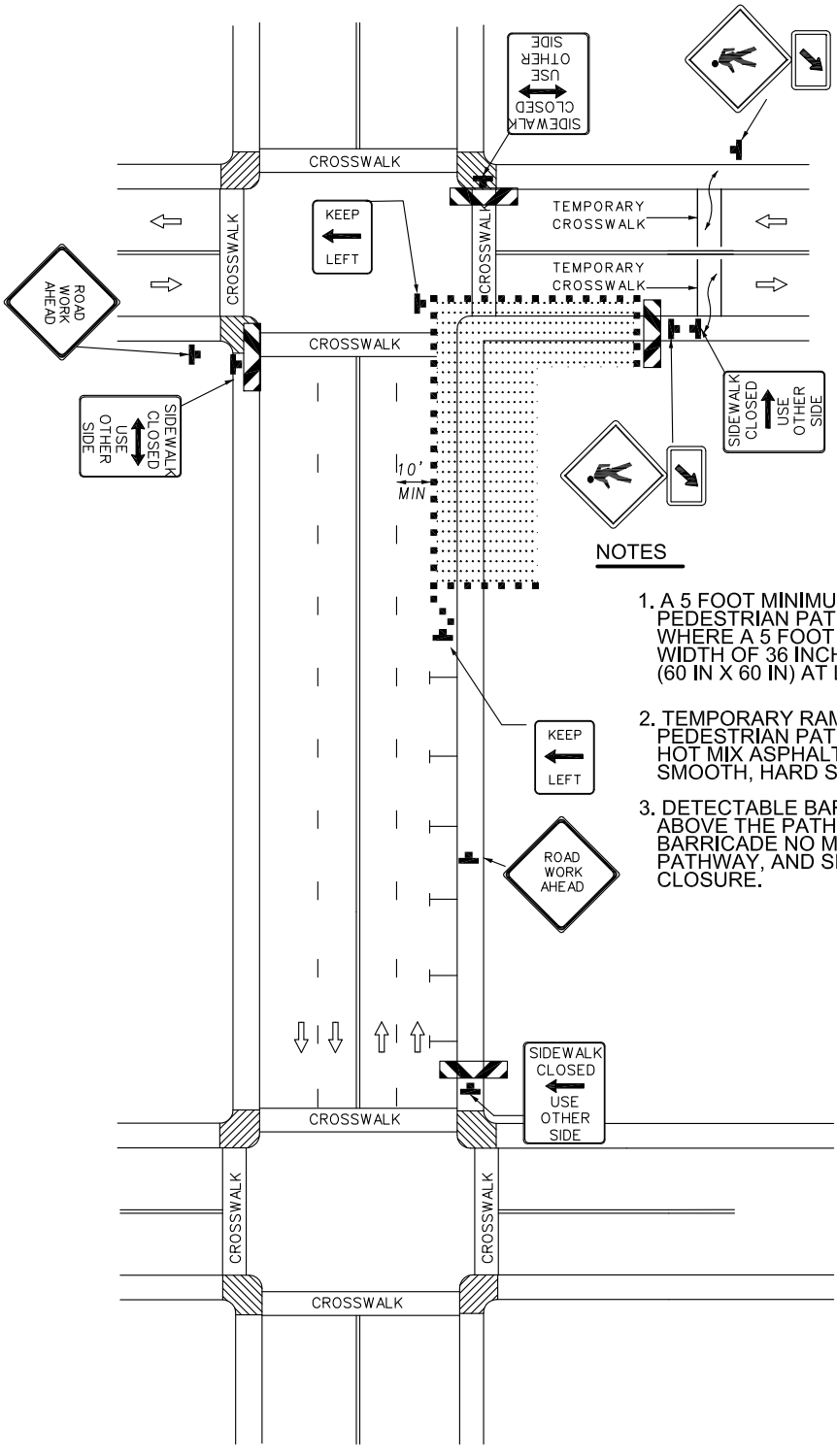

IMPORTANT:
THIS DRAWING SHALL BE USED IN COMBINATION WITH THE GENERAL NOTES BC 104.01-1 THRU 104.01-7

NOTES

1. A 5 FOOT MINIMUM WIDTH PEDESTRIAN PATH / ALTERNATE PEDESTRIAN PATH SHALL BE MAINTAINED WHERE POSSIBLE. WHERE A 5 FOOT MIN.WIDTH CANNOT BE ACHIEVED, A MINIMUM WIDTH OF 36 INCHES SHALL BE PROVIDED WITH PASSING ZONES (60 IN X 60 IN) AT LEAST EVERY 200 FT.
2. TEMPORARY RAMPS SHALL HAVE A SLOPE OF 12:1 MAX. THE PEDESTRIAN PATH AND RAMP SHALL BE CONSTRUCTED OF HOT MIX ASPHALT OR OTHER MATERIAL THAT CAN PROVIDE A SMOOTH, HARD SURFACE & WILL MAINTAIN 12:1 SLOPE.
3. DETECTABLE BARRICADES SHALL EXTEND AT LEAST 36" ABOVE THE PATHWAY WITH THE BOTTOM OF THE BARRICADE NO MORE THAN 1 1/2 INCHES ABOVE THE PATHWAY, AND SHALL EXTEND THE FULL WIDTH OF THE CLOSURE.

KEY:

- DIRECTION OF TRAFFIC
- WORK SITE
- TEMPORARY RAMP (WITH DETECTABLE SURFACE WARNING)
- SIGN
- DETECTABLE BARRICADE
- PARKING SPACES / SHOULDER AREA
- EXISTING CURB RAMPS
- CHANNELIZING DEVICES

APPROVED:
Frank Murphy
DEPUTY DIRECTOR - OPERATIONS
Khalil Zaied
DIRECTOR, DEPARTMENT OF TRANSPORTATION

CITY OF BALTIMORE
DEPARTMENT OF TRANSPORTATION
TRAFFIC DIVISION

ISSUED	REVISED	REVISED
8 / 2010		

PED AND CURB-LANE CONTROL / MULTILANE UNDIVIDED SPEEDS LESS THAN OR EQUAL TO 40 MPH / OVER 12 HRS. OR NIGHTTIME USE

STANDARD NO.
BC 117.01-2

SCALE : NONE | SHEET 2 OF 4

TEMPORARY TRAFFIC CONTROL TYPICAL APPLICATION FOR SIDEWALK CLOSURE
ALTERNATE PEDESTRIAN DETOUR ROUTE FOR FULL BLOCK CLOSURE

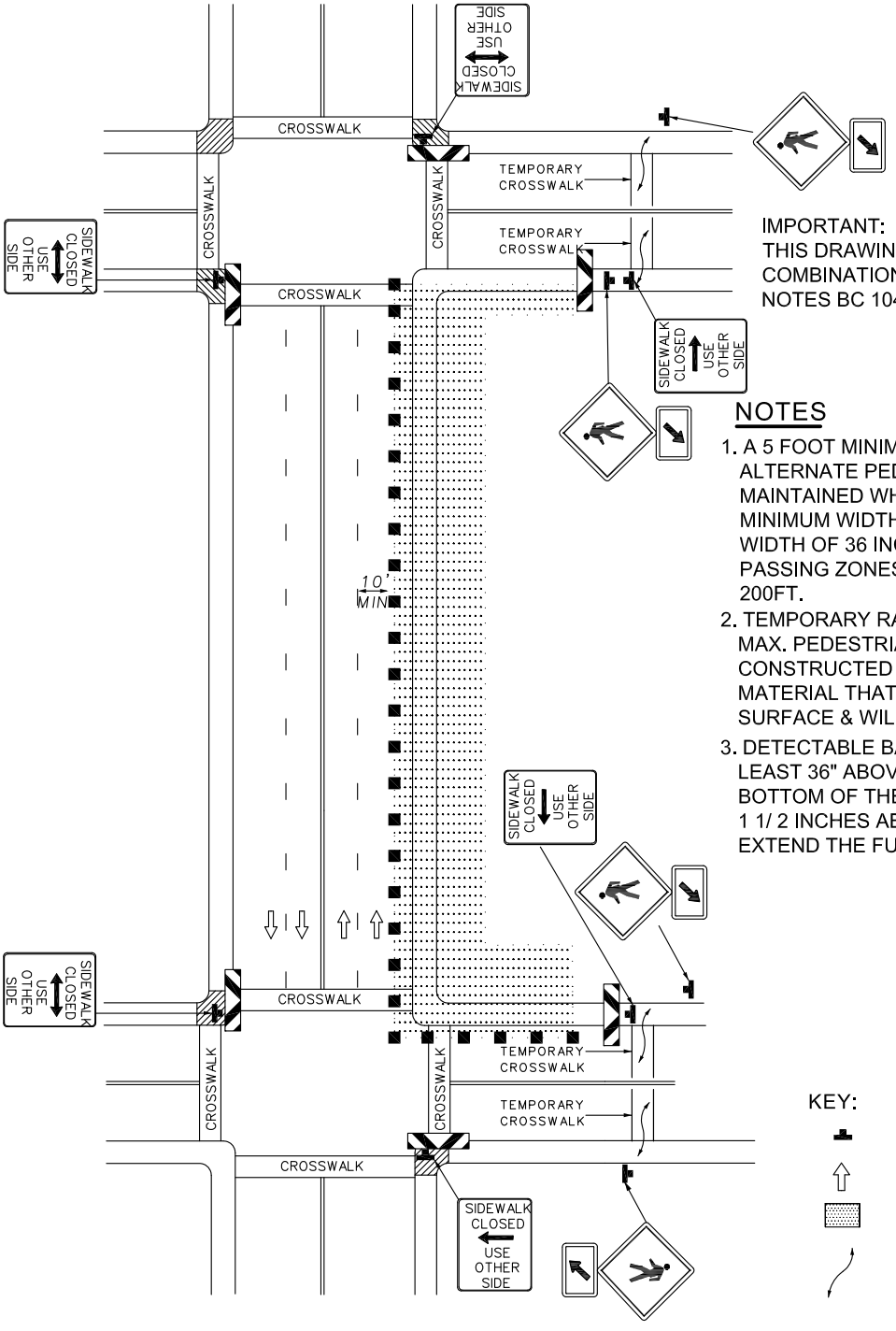

IMPORTANT:
THIS DRAWING SHALL BE USED IN COMBINATION WITH THE GENERAL NOTES BC 104.01-1 THRU 104.01-7

NOTES

1. A 5 FOOT MINIMUM WIDTH PEDESTRIAN PATH / ALTERNATE PEDESTRIAN PATH SHALL BE MAINTAINED WHERE POSSIBLE. WHERE A 5 FOOT MINIMUM WIDTH CANNOT BE ACHIEVED, A MINIMUM WIDTH OF 36 INCHES SHALL BE PROVIDED WITH PASSING ZONES (60 IN X 60IN) AT LEAST EVERY 200FT.
2. TEMPORARY RAMPS SHALL HAVE A SLOPE OF 12:1 MAX. PEDESTRIAN PATH AND RAMP SHALL BE CONSTRUCTED OF HOT MIX ASPHALT OR OTHER MATERIAL THAT CAN PROVIDE A SMOOTH, HARD SURFACE & WILL MAINTAIN 12:1 SLOPE.
3. DETECTABLE BARRICADES SHALL EXTEND AT LEAST 36" ABOVE THE PATHWAY WITH THE BOTTOM OF THE BARRICADE NO MORE THAN 1 1/ 2 INCHES ABOVE THE PATHWAY, AND SHALL EXTEND THE FULL WIDTH OF THE CLOSURE.

KEY:

- SIGN
- DIRECTION OF TRAFFIC
- WORK SITE
- TEMPORARY RAMP (WITH DETECTABLE SURFACE WARNING)
- DETECTABLE BARRICADE
- EXISTING CURB RAMPS
- CHANNELIZING DEVICES

APPROVED :
Frank Murphy
DEPUTY DIRECTOR - OPERATIONS
Khalil Zaied
DIRECTOR, DEPARTMENT OF TRANSPORTATION

CITY OF BALTIMORE
DEPARTMENT OF TRANSPORTATION
TRAFFIC DIVISION

ISSUED	REVISED	REVISED
8 / 2010		

PED AND CURB-LANECONTROL / MULTILANE UNDIVIDED SPEEDS LESS THAN OR EQUAL TO 40 MPH / OVER 12 HRS. OR NIGHTTIME USE

STANDARD NO.
BC-117.01-3

SCALE : NONE

TEMPORARY TRAFFIC CONTROL TYPICAL APPLICATION
ALTERNATE PEDESTRIAN DETOUR ROUTE USING OPPOSITE SIDEWALK

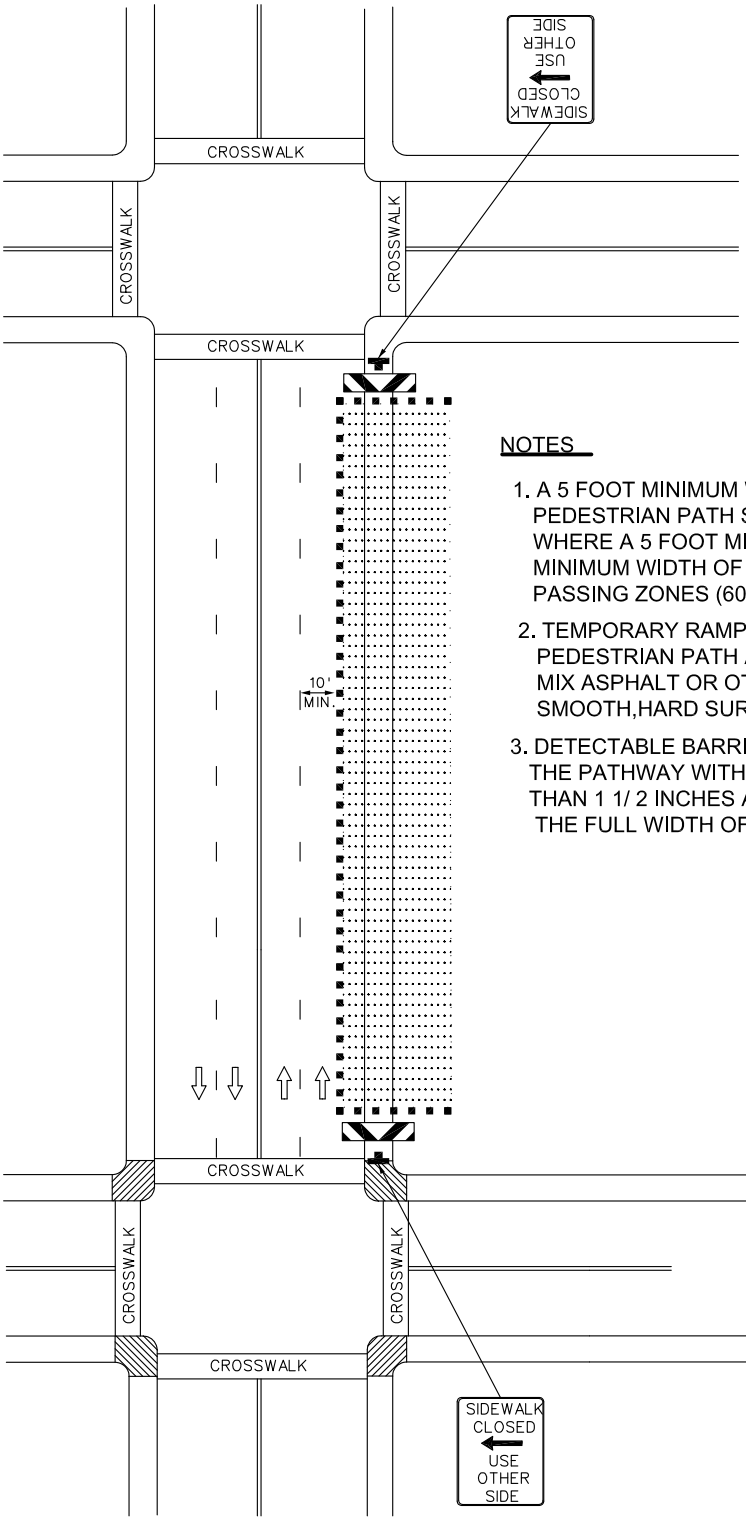

IMPORTANT:
THIS DRAWING SHALL BE USED IN COMBINATION WITH THE GENERAL NOTES BC 104.01-1 THRU BC 104.01-7

NOTES

1. A 5 FOOT MINIMUM WIDTH PEDESTRIAN PATH / ALTERNATE PEDESTRIAN PATH SHALL BE MAINTAINED WHERE POSSIBLE. WHERE A 5 FOOT MINIMUM WIDTH CANNOT BE ACHIEVED, A MINIMUM WIDTH OF 36 INCHES SHALL BE PROVIDED WITH PASSING ZONES (60 IN X 60 IN) AT LEAST EVERY 200FT.
2. TEMPORARY RAMPS SHALL HAVE A SLOPE OF 12:1 MAX. THE PEDESTRIAN PATH AND RAMP SHALL BE CONSTRUCTED OF HOT MIX ASPHALT OR OTHER MATERIAL THAT CAN PROVIDE A SMOOTH,HARD SURFACE & WILL MAINTAIN 12:1 SLOPE.
3. DETECTABLE BARRICADES SHALL EXTEND AT LEAST 36" ABOVE THE PATHWAY WITH THE BOTTOM OF THE BARRICADE NO MORE THAN 1 1/ 2 INCHES ABOVE THE PATHWAY, AND SHALL EXTEND THE FULL WIDTH OF THE CLOSURE.

KEY:

- DIRECTION OF TRAFFIC
- WORK SITE
- SIGN
- DETECTABLE BARRICADE
- EXISTING CURB RAMPS
- CHANNELIZING DEVICES

APPROVED :
Frank Murphy
DEPUTY DIRECTOR - OPERATIONS
Khalil Zaied
DIRECTOR, DEPARTMENT OF TRANSPORTATION

CITY OF BALTIMORE
DEPARTMENT OF TRANSPORTATION
TRAFFIC DIVISION

ISSUED	REVISED	REVISED
8 / 2010		

PED AND CURB-LANECONTROL / MULTILANE UNDIVIDED SPEEDS LESS THAN OR EQUAL TO 40 MPH / OVER 12 HRS. OR NIGHTTIME USE

STANDARD NO.
BC-117.01-4

SCALE : NONE

CONTRACTOR MUST PROVIDE SHOP DRAWING DETAIL OF COVERED WALKWAY FOR REVIEW AND APPROVAL TO THE TRAFFIC OPERATIONS SECTION, IF ALTERNATE MATERIALS FOR WALKWAY ARE PROPOSED

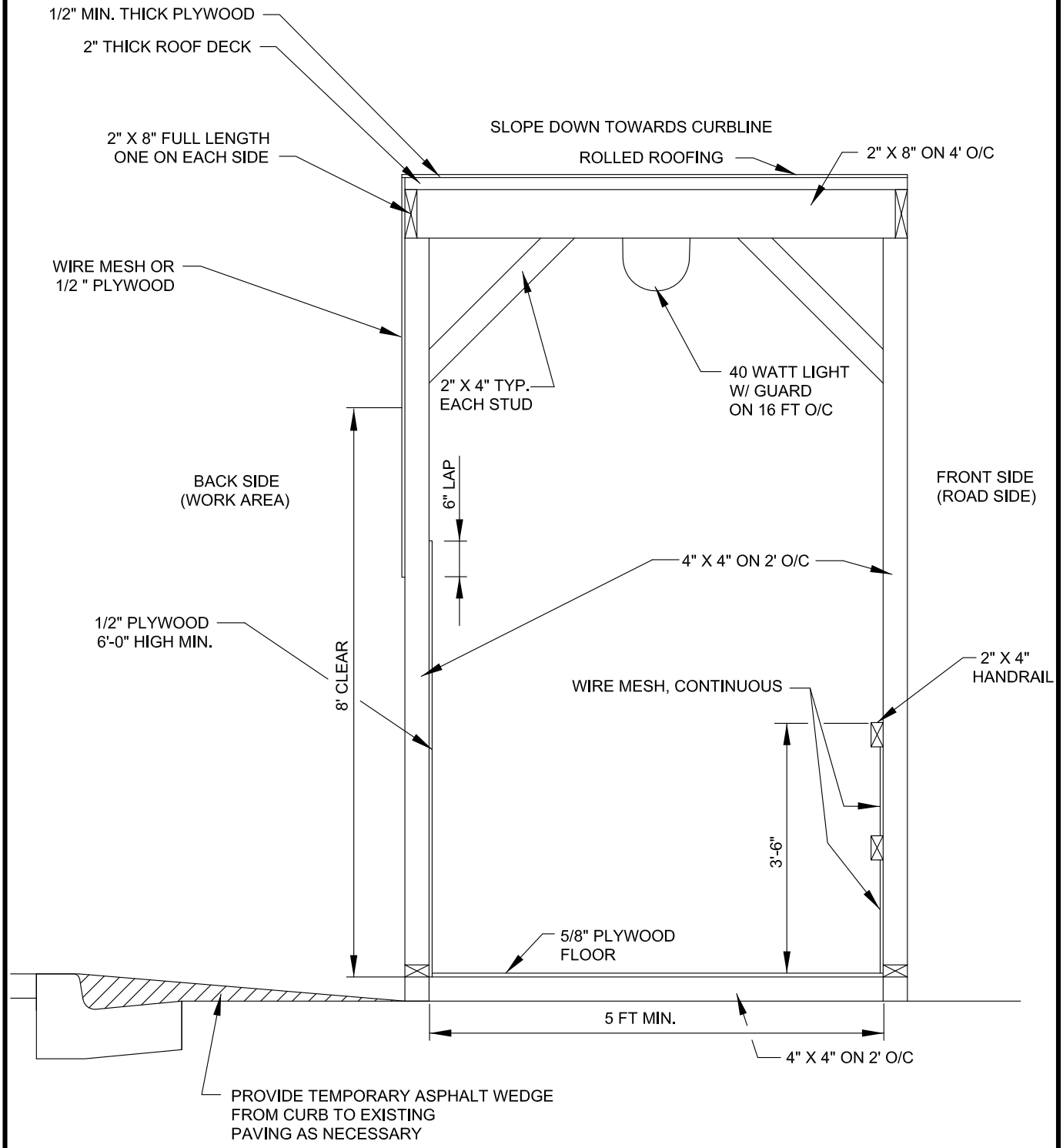

APPROVED:

Frank Murphy

DEPUTY DIRECTOR - OPERATIONS

Khalil Zaied

DIRECTOR, DEPARTMENT OF TRANSPORTATION

CITY OF BALTIMORE
DEPARTMENT OF TRANSPORTATION
TRAFFIC DIVISION

ISSUED	REVISED	REVISED
8 / 2010		

COVERED WALKWAY

STANDARD NO.
BC 117.02

SCALE : NONE

SHEET 1 OF 1

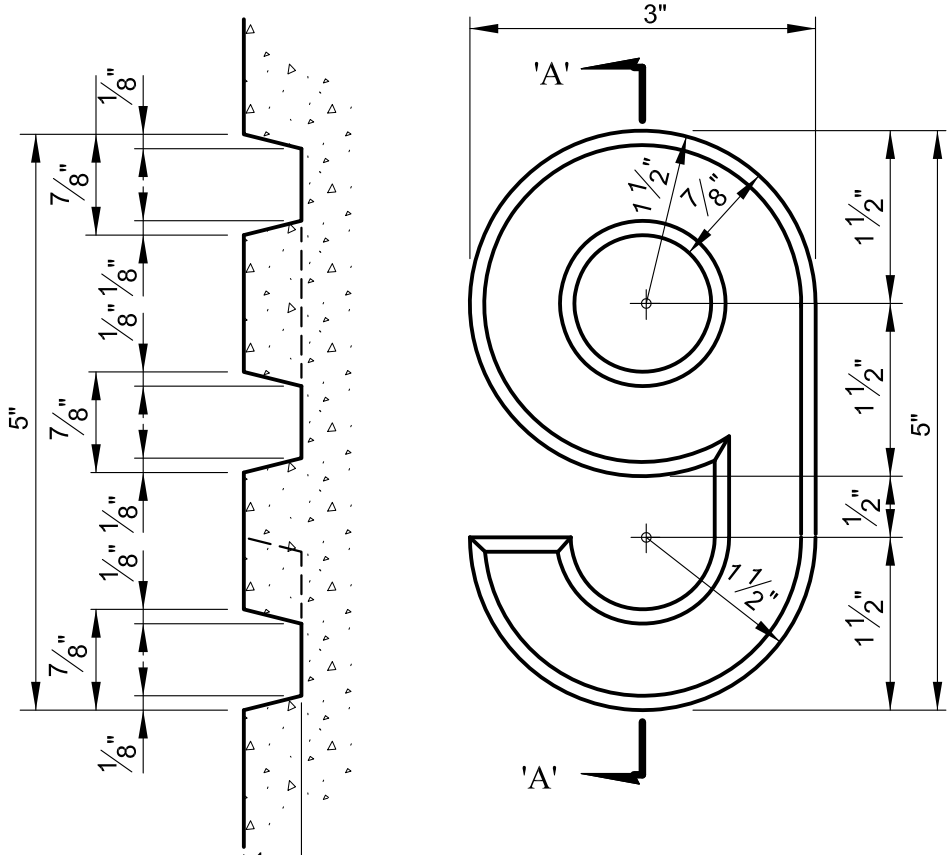

SECTION 'A-A'

TO BE PLACED ON ALL STRUCTURES
AS DIRECTED BY THE ENGINEER

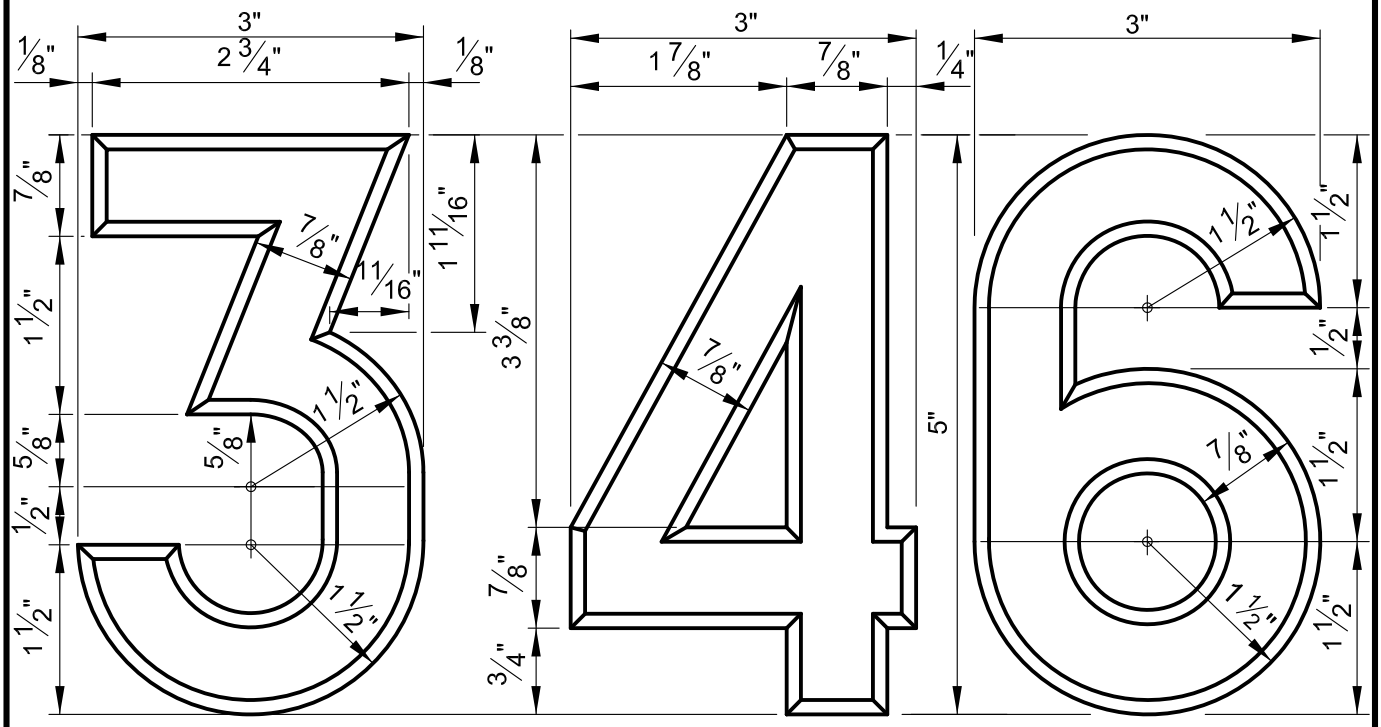

CITY OF BALTIMORE 1797	APPROVED: Bimal Devkota DIVISION CHIEF, TRANSPORTATION ENGINEERING AND CONSTRUCTION Khalil Zaid DIRECTOR, DEPARTMENT OF TRANSPORTATION	CITY OF BALTIMORE DEPARTMENT OF TRANSPORTATION TRANSPORTATION ENGINEERING AND CONSTRUCTION	ISSUED 8 / 2010	REVISED	REVISED
		YEAR BUILT NUMERALS	STANDARD NO. BC 400.01		
			SCALE : NONE	SHEET 1 OF 1	

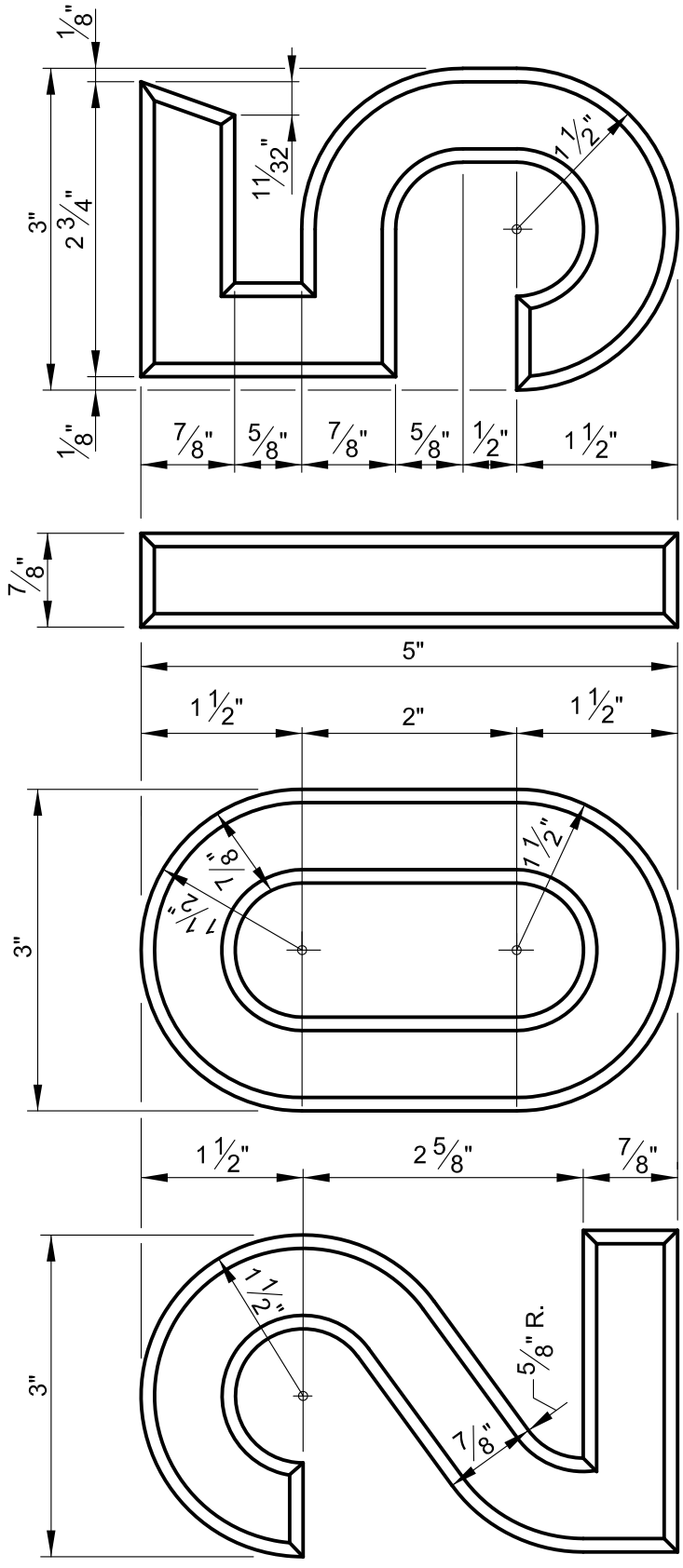

CITY OF BALTIMORE 1797	APPROVED: DIVISION CHIEF, TRANSPORTATION ENGINEERING AND CONSTRUCTION — DIRECTOR, DEPARTMENT OF TRANSPORTATION	CITY OF BALTIMORE DEPARTMENT OF TRANSPORTATION TRANSPORTATION ENGINEERING AND CONSTRUCTION	ISSUED: 8 / 2010	REVISED / REVISED
		YEAR BUILT NUMERALS	STANDARD NO. BC 400.02	
			SCALE : NONE	SHEET 1 OF 1

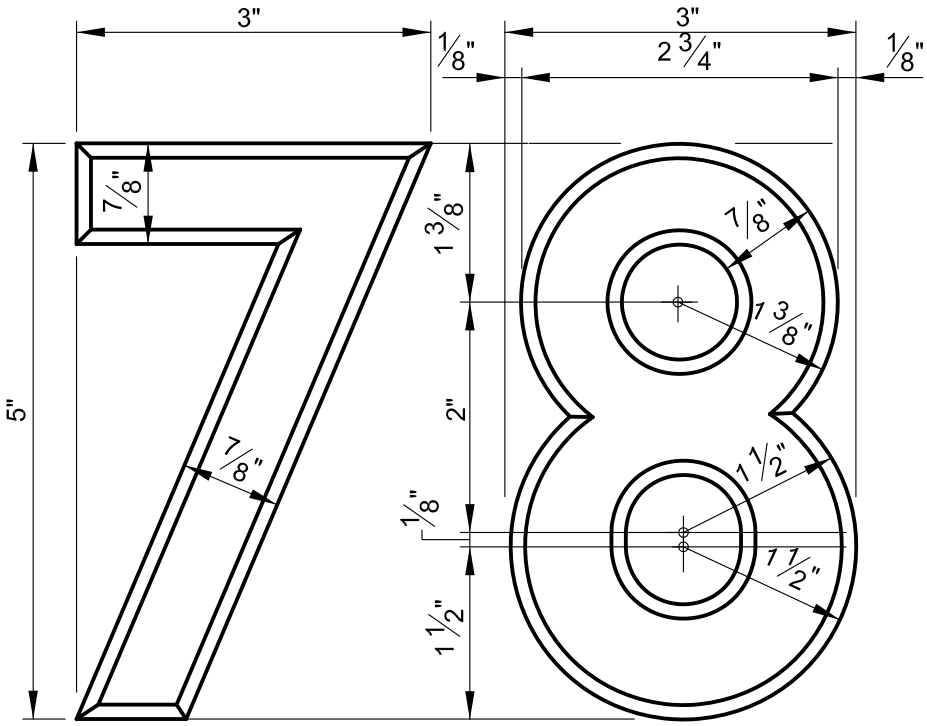

CITY OF BALTIMORE DEPARTMENT OF TRANSPORTATION TRANSPORTATION ENGINEERING AND CONSTRUCTION		ISSUED	REVISED	REVISED
		8 / 2010		
YEAR BUILT NUMERALS		STANDARD NO. BC 400.03		
		SCALE : NONE	SHEET 1 OF 1	

APPROVED :

DIVISION CHIEF, TRANSPORTATION ENGINEERING AND CONSTRUCTION

DIRECTOR, DEPARTMENT OF TRANSPORTATION

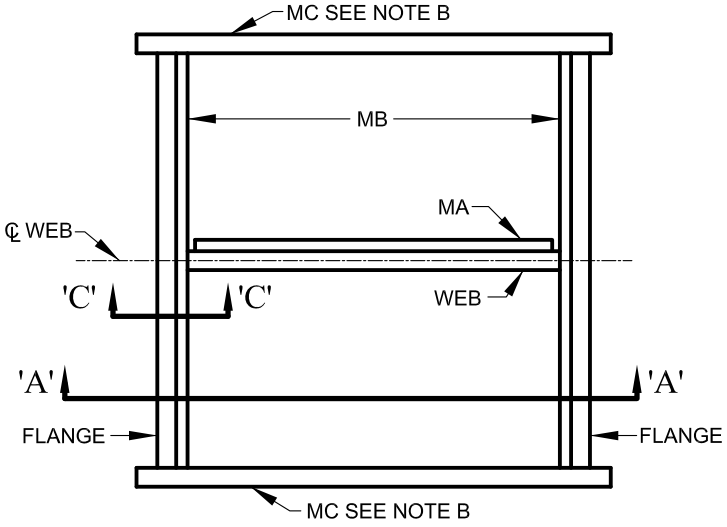

PLAN

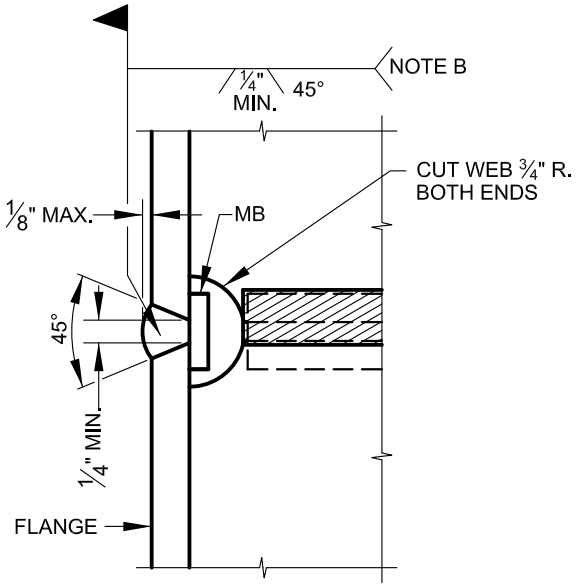

SECTION 'C-C'
ALTERNATE FLANGE WELD

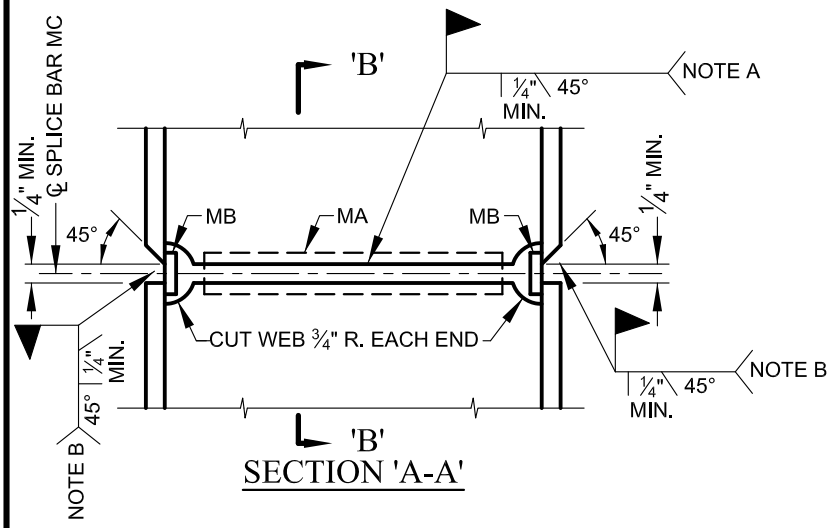

SECTION 'A-A'

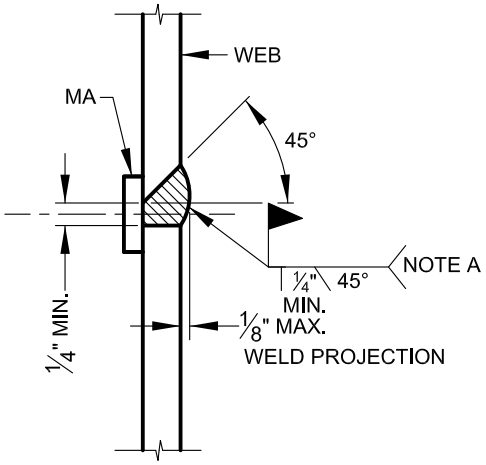

SECTION 'B-B'

NOTE 'A' - BAR MA TO BE TACK WELDED TO BOTH WEBS AT SPLICE.
END OF WELD TO BE SMOOTH AND FLUSH WITH WEB CUT.

NOTE 'B' - BAR MB TO BE TACK WELDED TO FLANGES AT SPLICE.
BAR MC TO BE TACK WELDED TO FLANGE AT SPLICE TO BACK UP END OF FLANGE WELD. REMOVE MC AFTER WELD IS COMPLETED. END OF WELD MUST BE SMOOTH AND FLUSH WITH EDGE OF FLANGE.
GRIND WELD SMOOTH WITH EDGE OF FLANGE IF PILE IS UNSUPPORTED IN WELD AREA SUCH AS: IN AIR, WATER OR SOFT MUD.

MATERIAL REQUIRED

FOR HP10X42
- 1 BAR MA 1" X 3/16" X 7 1/4"
- 2 BARS MB 1" X 3/16" X 10"
- 2 BARS MC 3" X 3/8" X 11"

FOR HP12X53
- 1 BAR MA 1" X 3/16" X 9 3/8"
- 2 BARS MB 1" X 3/16" X 1'-0"
- 2 BARS MC 3" X 3/8" X 1'-1"

APPROVED:

DIVISION CHIEF, TRANSPORTATION ENGINEERING AND CONSTRUCTION

DIRECTOR, DEPARTMENT OF TRANSPORTATION

CITY OF BALTIMORE
DEPARTMENT OF TRANSPORTATION
TRANSPORTATION ENGINEERING AND CONSTRUCTION

ISSUED	REVISED	REVISED
8 / 2010		

STEEL 'H' PILE SPLICE DETAIL

STANDARD NO.
BC 418.02

SCALE : NONE

SHEET 1 OF 1

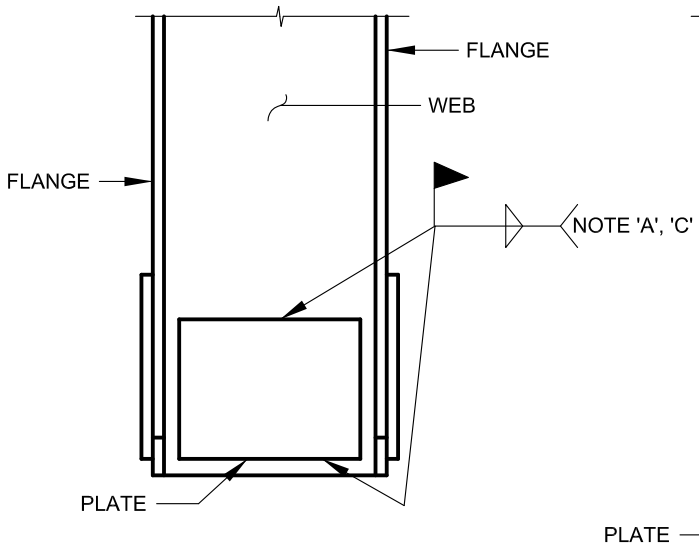

SIDE ELEVATION

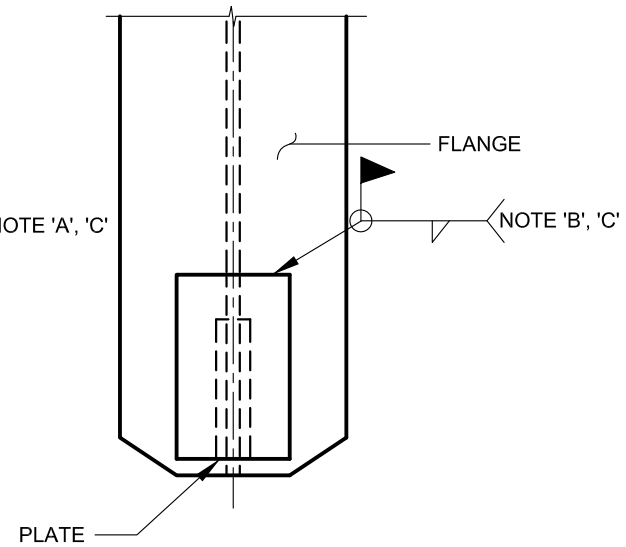

FRONT ELEVATION

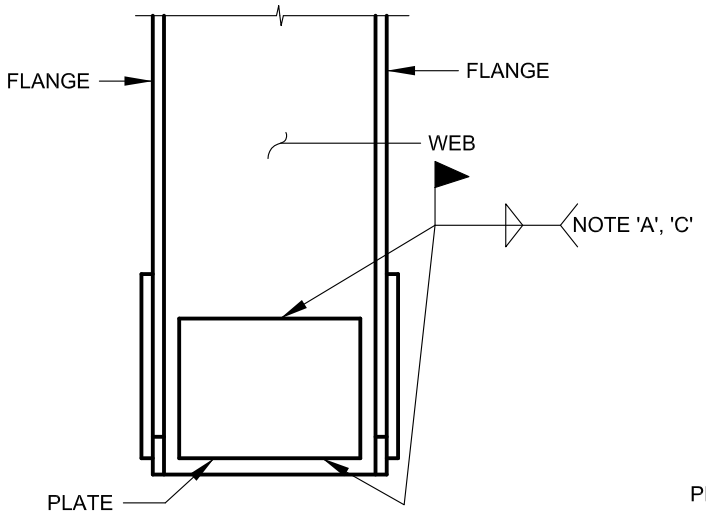

SIDE ELEVATION

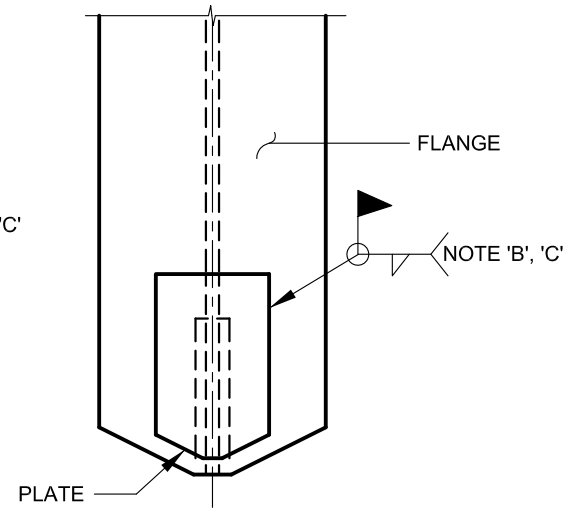

FRONT ELEVATION

NOTE 'A': WEB PLATES WELDED TOP AND BOTTOM EDGES ONLY.
NOTE 'B': FLANGE PLATES WELDED ALL AROUND.
NOTE 'C': FILLET WELD MIN. SIZE=THICKNESS OF PLATE.

APPROVED:

DIVISION CHIEF, TRANSPORTATION ENGINEERING AND CONSTRUCTION

DIRECTOR, DEPARTMENT OF TRANSPORTATION

CITY OF BALTIMORE
DEPARTMENT OF TRANSPORTATION
TRANSPORTATION ENGINEERING AND CONSTRUCTION

ISSUED	REVISED	REVISED
8 / 2010		

REINFORCED 'H' PILE TIP DETAILS

STANDARD NO.
BC 418.03

SCALE : NONE

SHEET 1 OF 1

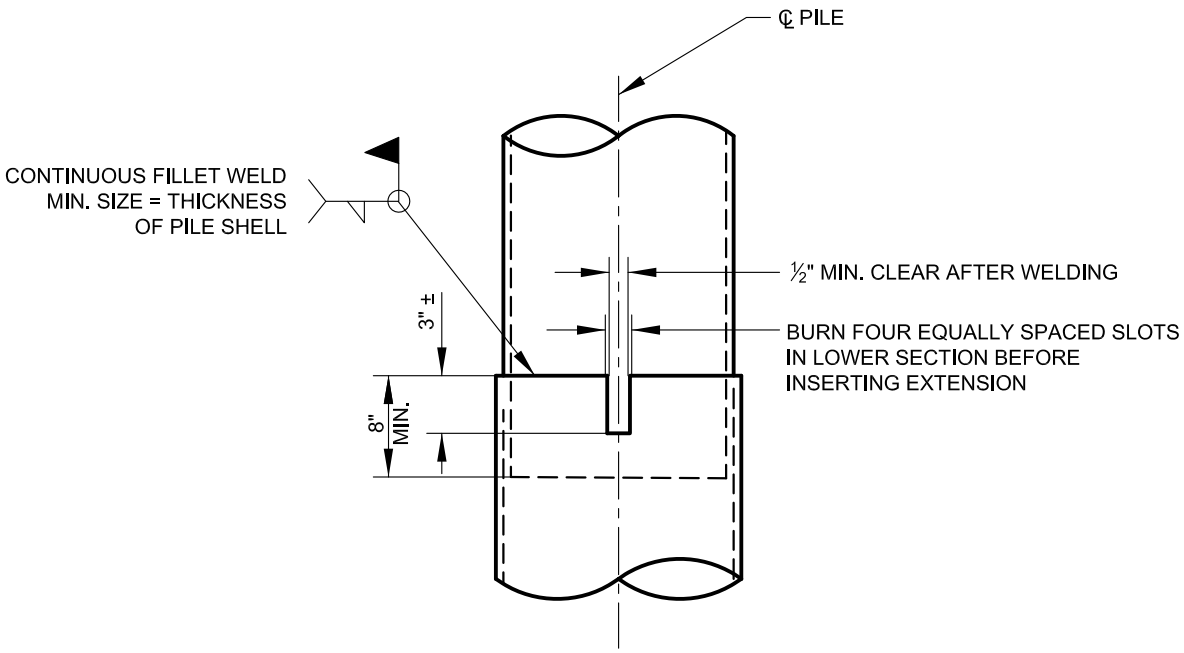

HEAVY DUTY PILE SPLICE
FOR STEEL SHELLS OR CASINGS
FOR C.I.P. CONCRETE PILES

APPROVED:

DIVISION CHIEF, TRANSPORTATION ENGINEERING AND CONSTRUCTION

DIRECTOR, DEPARTMENT OF TRANSPORTATION

CITY OF BALTIMORE
DEPARTMENT OF TRANSPORTATION
TRANSPORTATION ENGINEERING AND CONSTRUCTION

HEAVY DUTY C.I.P.
CONCRETE PILE SPLICE

ISSUED	REVISED	REVISED
8 / 2010		

STANDARD NO.
BC 418.04

SCALE : NONE

SHEET 1 OF 1

NOTE: BRIDGE RAILING NOT SHOWN

ALL LONGITUDINAL BARS ARE #5 SPACED AS SHOWN

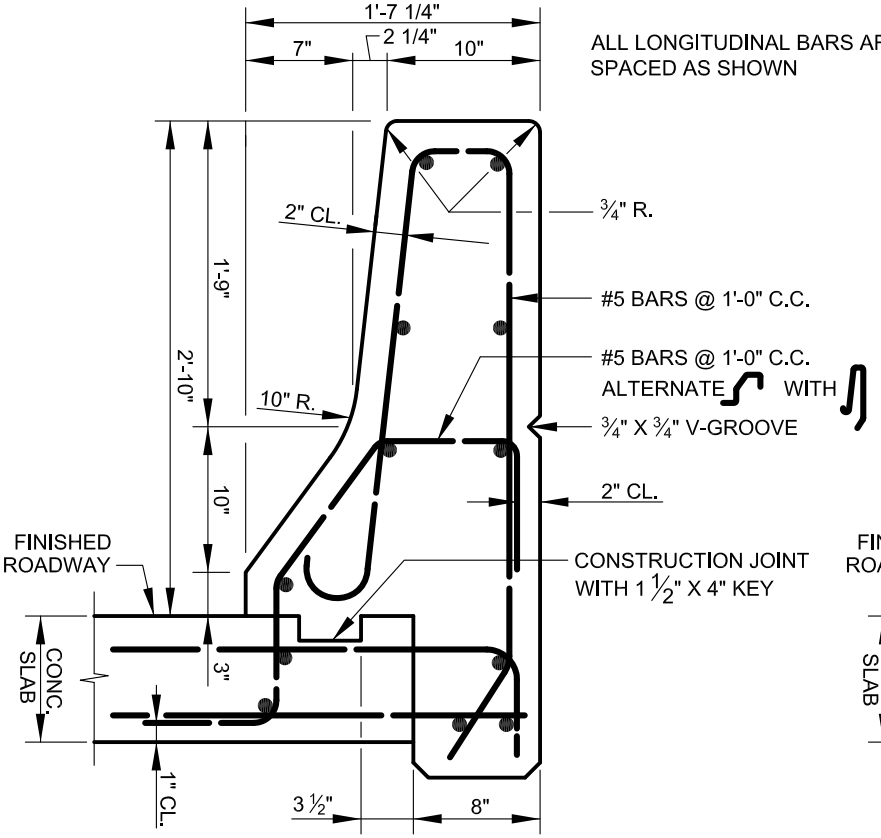

NORMAL DECK REINFORCING SHOWN

FOR BRIDGES OVER HIGHWAYS

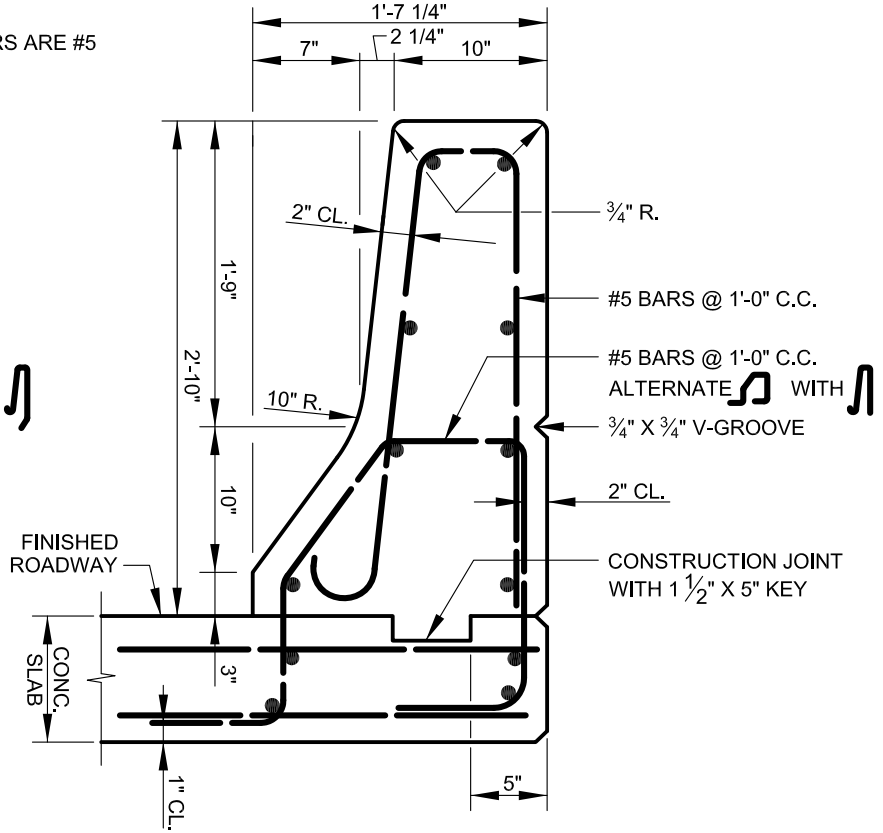

NORMAL DECK REINFORCING SHOWN

FOR BRIDGES OVER STREAMS & RAILROADS

TYPICAL CROSS SECTIONS - BRIDGE PARAPET

GENERAL NOTES:

-PLACE VERTICAL JOINT AT CENTER OF EVERY RAIL PANEL (8'-0" MAX.)
-JOINTS SHALL BE FORMED BY POURING ALTERNATE SECTIONS.
-THE POURS OF ADJACENT SECTIONS SHALL HAVE A TWO (2) DAY DELAY BETWEEN POURS
-A PARAFFIN COATING SHALL BE APPLIED AT EVERY JOINT
-NO REINFORCING STEEL SHALL PASS THROUGH JOINT

APPROVED:

DIVISION CHIEF, TRANSPORTATION ENGINEERING AND CONSTRUCTION

DIRECTOR, DEPARTMENT OF TRANSPORTATION

CITY OF BALTIMORE
DEPARTMENT OF TRANSPORTATION
TRANSPORTATION ENGINEERING AND CONSTRUCTION

BRIDGE PARAPET

ISSUED	REVISED	REVISED
8 / 2010		

STANDARD NO.
BC 424.91

SCALE : NONE

SHEET 1 OF 1

NOTE:
ALL LONGITUDINAL BARS ARE #5
SPACED AS SHOWN

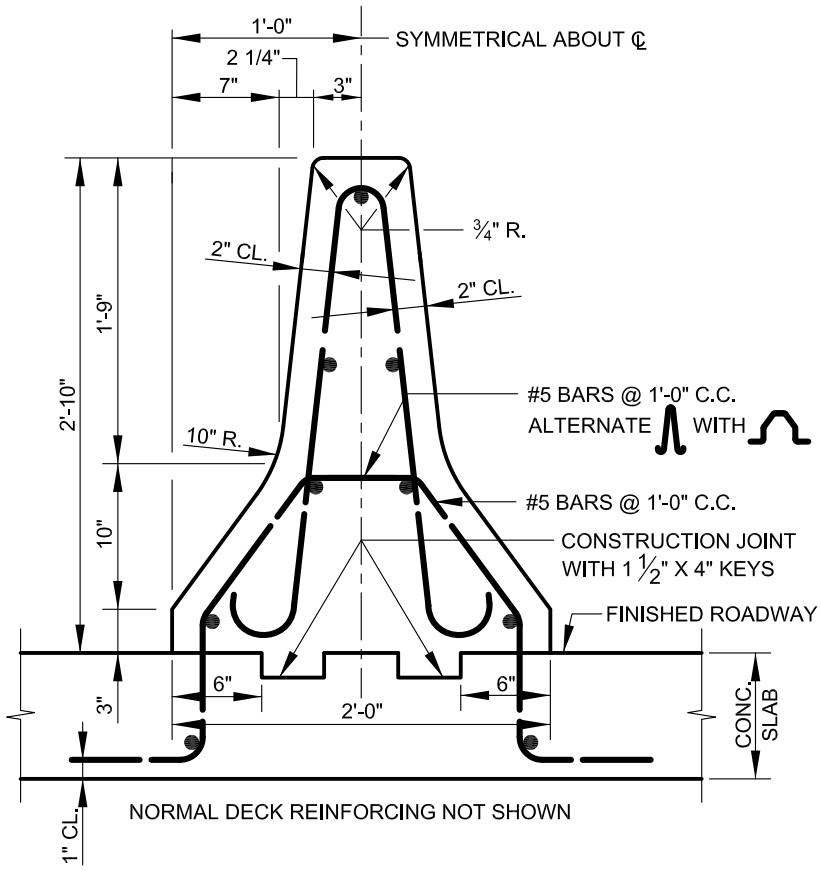

TYPICAL CROSS SECTION

GENERAL NOTES:

-PLACE CONTRACTION JOINTS 30'-0" MAX.
-JOINTS SHALL BE FORMED BY POURING ALTERNATE SECTIONS.
-THE POURS OF ADJACENT SECTIONS SHALL HAVE A TWO (2) DAY DELAY BETWEEN POURS.
-A PARAFFIN COATING SHALL BE APPLIED AT EVERY JOINT.
-NO REINFORCING STEEL SHALL PASS THROUGH JOINT.

APPROVED:

DIVISION CHIEF, TRANSPORTATION ENGINEERING AND CONSTRUCTION

DIRECTOR, DEPARTMENT OF TRANSPORTATION

CITY OF BALTIMORE
DEPARTMENT OF TRANSPORTATION
TRANSPORTATION ENGINEERING AND CONSTRUCTION

ISSUED	REVISED	REVISED
8 / 2010		

BRIDGE MEDIAN BARRIER

STANDARD NO.
BC 424.92

SCALE : NONE | SHEET 1 OF 1

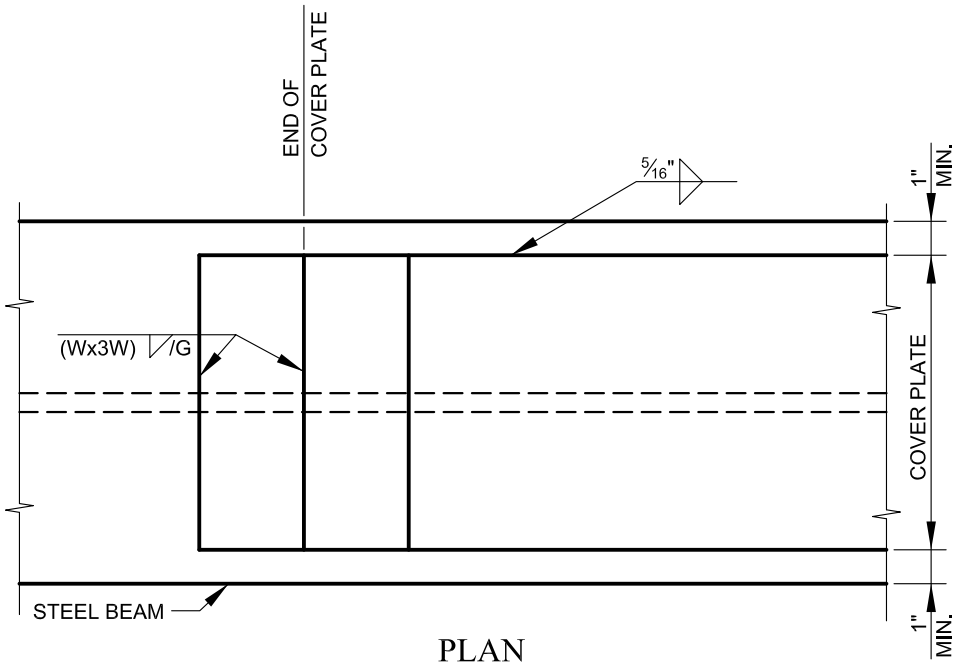

PLAN

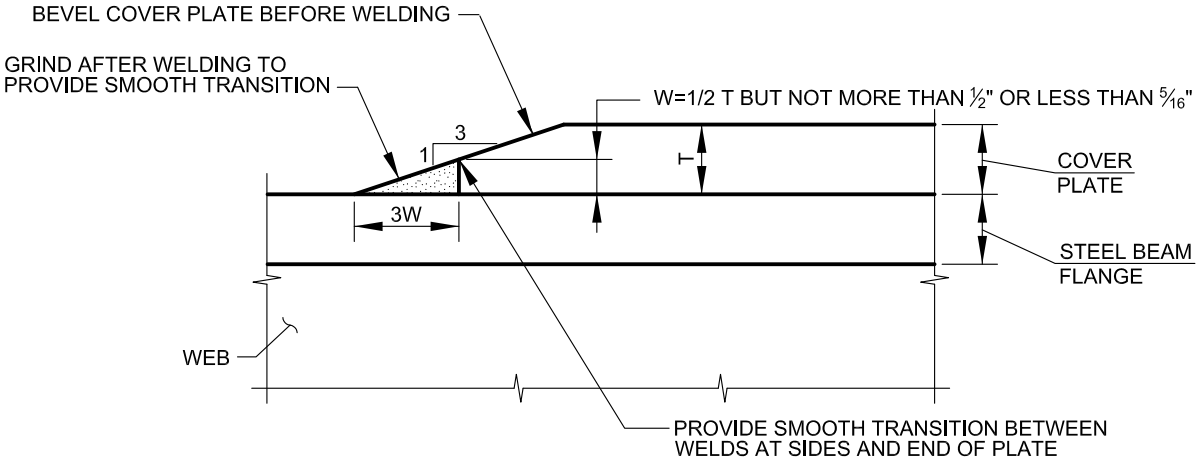

ELEVATION

APPROVED:

DIVISION CHIEF, TRANSPORTATION ENGINEERING AND CONSTRUCTION

DIRECTOR, DEPARTMENT OF TRANSPORTATION

CITY OF BALTIMORE
DEPARTMENT OF TRANSPORTATION
TRANSPORTATION ENGINEERING AND CONSTRUCTION

ISSUED	REVISED	REVISED
8 / 2010		

COVER PLATE DETAILS

STANDARD NO.
BC 429.01

SCALE : NONE

SHEET 1 OF 1

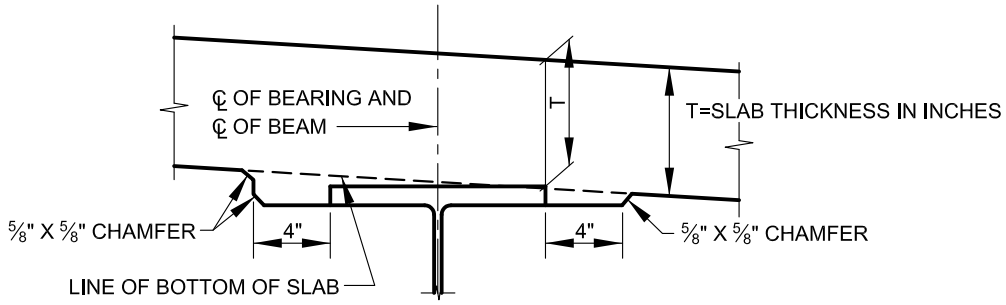

CONCRETE HAUNCH * AT CONCRETE SLAB AND STEEL BEAM CONSTRUCTION

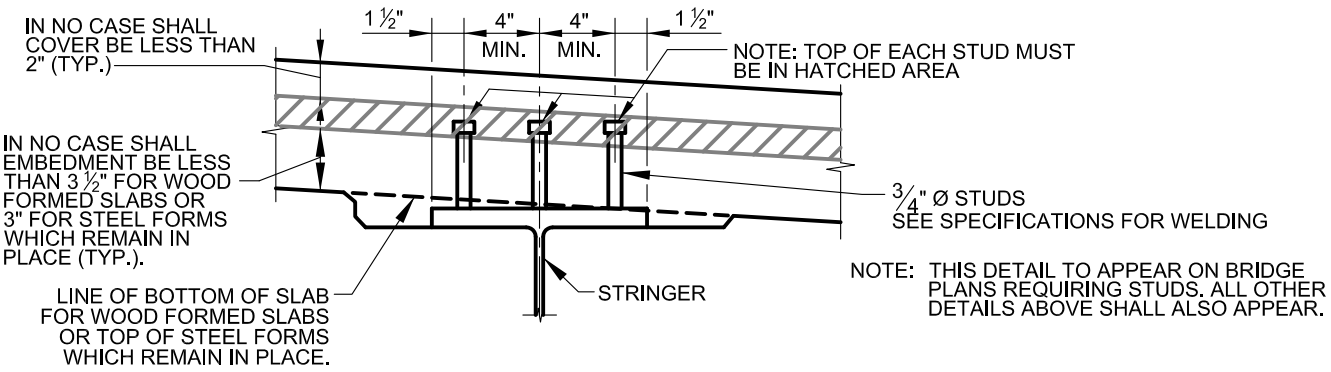

STUD SHEAR CONNECTOR DETAIL

NOTES:
1. * OMIT CONCRETE HAUNCH BY DROPPING BOTTOM OF SLAB TO BOTTOM OF TOP FLANGE ON ALL SPANS OF 30'-0" OR LESS C/C OF BEARING.
2. FOR NUMBER OF STUDS PER ROW, AND LONGITUDINAL SPACING OF ROWS SEE PERTINENT SUPERSTRUCTURE SHEETS.
3. FOR FLANGE WIDTHS LESS THAN 11", ONLY TWO ROWS OF STUDS ARE TO BE USED.
4. STEEL FORMS WHICH REMAIN IN PLACE NOT SHOWN.

APPROVED:

DIVISION CHIEF, TRANSPORTATION ENGINEERING AND CONSTRUCTION

DIRECTOR, DEPARTMENT OF TRANSPORTATION

CITY OF BALTIMORE
DEPARTMENT OF TRANSPORTATION
TRANSPORTATION ENGINEERING AND CONSTRUCTION

ISSUED	REVISED	REVISED
8 / 2010		

HAUNCH AND STEEL STUD DETAILS AT TOP OF BEAMS

STANDARD NO.
BC 430.01

SCALE : NONE | SHEET 1 OF 1

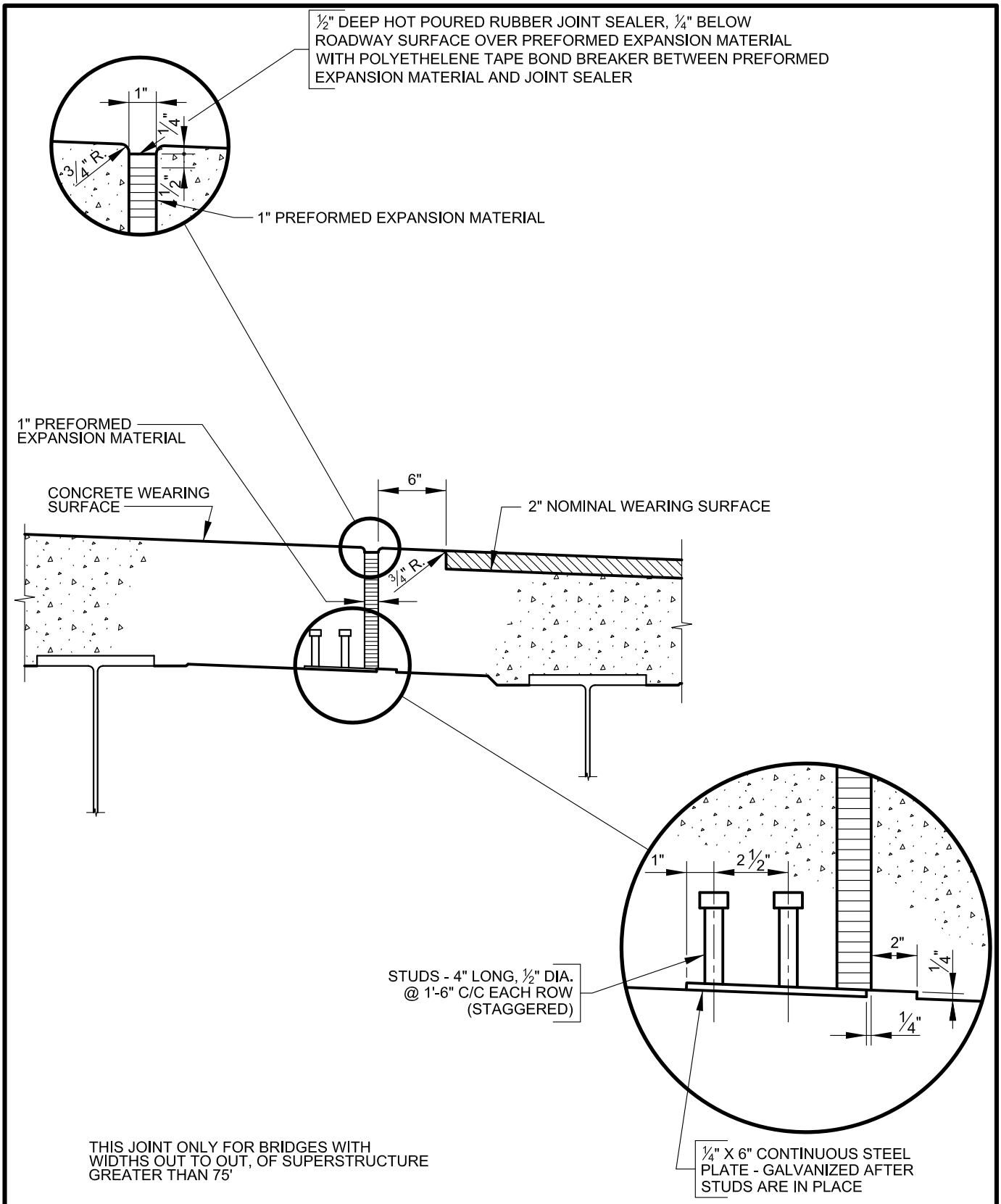

CITY OF BALTIMORE 1797

APPROVED:

DIVISION CHIEF, TRANSPORTATION ENGINEERING AND CONSTRUCTION

DIRECTOR, DEPARTMENT OF TRANSPORTATION

CITY OF BALTIMORE
DEPARTMENT OF TRANSPORTATION
TRANSPORTATION ENGINEERING AND CONSTRUCTION

LONGITUDINAL JOINT IN BRIDGE DECK

ISSUED	REVISED	REVISED
8 / 2010		

STANDARD NO.
BC 431.01

SCALE : NONE

SHEET 1 OF 1

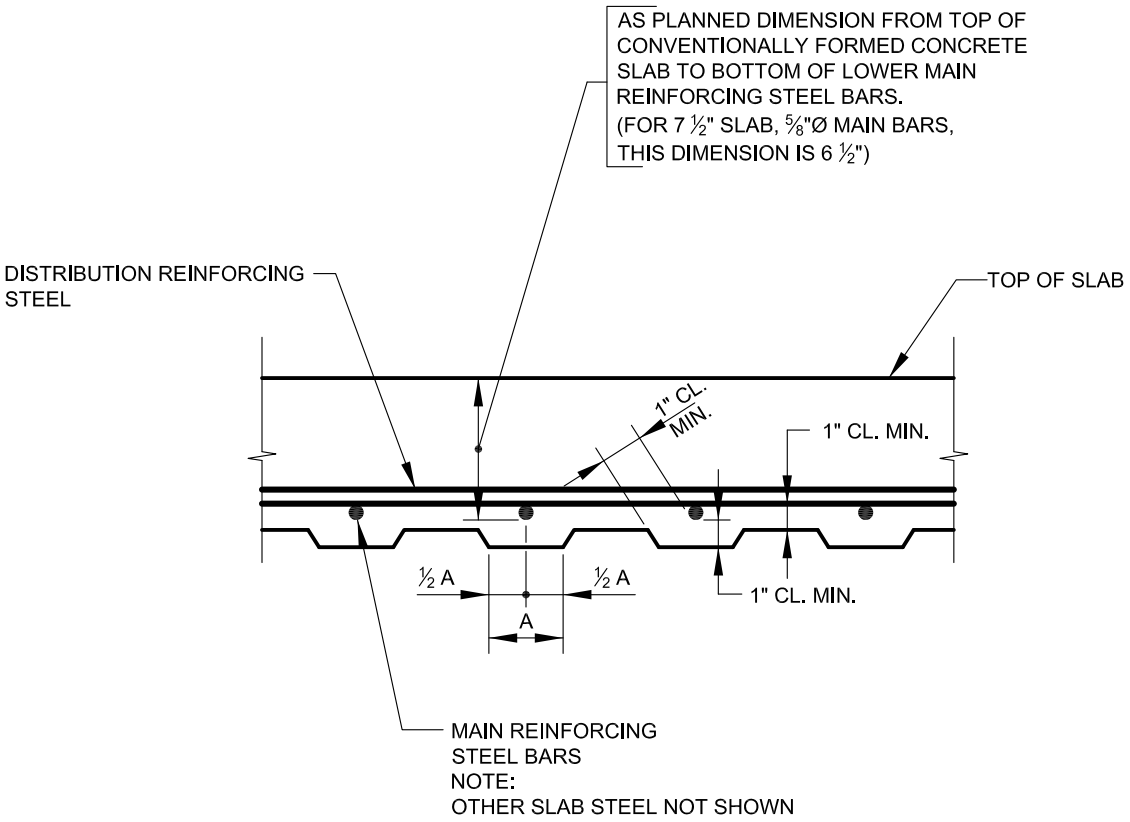

STEEL FORMS WHICH REMAIN IN PLACE SHALL BE THE PROPER GAUGE TO SUPPORT, WITHIN SPECIFIED DEFLECTIONS, THE SPECIFIED WEIGHTS FOR THE PARTICULAR SPAN INVOLVED AND SHALL BE ZINC-COATED (GALVANIZED) IN ACCORDANCE WITH ASTM SPECIFICATION A-653 AND A-924 COATING CLASS G-165. NOTE ALSO THAT NO FORM LESS THAN 20 GAUGE THICKNESS WILL BE ACCEPTED DUE TO DESIRE FOR DURABILITY.

NOTE:
NO WELDING OF THESE FORMS TO PARTS CARRYING TENSION WILL BE PERMITTED. THESE FORMS SHALL BE VERTICALLY ADJUSTED TO ATTAIN LINE AND GRADE REQUIRED BY THE PLANS.

APPROVED:

DIVISION CHIEF, TRANSPORTATION ENGINEERING AND CONSTRUCTION

DIRECTOR, DEPARTMENT OF TRANSPORTATION

CITY OF BALTIMORE
DEPARTMENT OF TRANSPORTATION
TRANSPORTATION ENGINEERING AND CONSTRUCTION

STAY-IN-PLACE STEEL FORMS FOR CONCRETE SLABS SUPPORTED BY STEEL BEAMS

ISSUED	REVISED	REVISED
8 / 2010		

STANDARD NO.
BC 432.01

SCALE : NONE

SHEET 1 OF 1

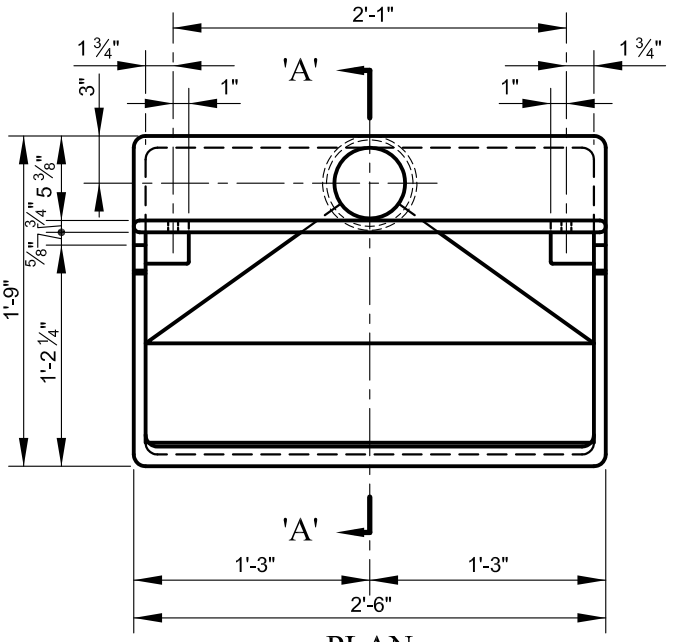

PLAN

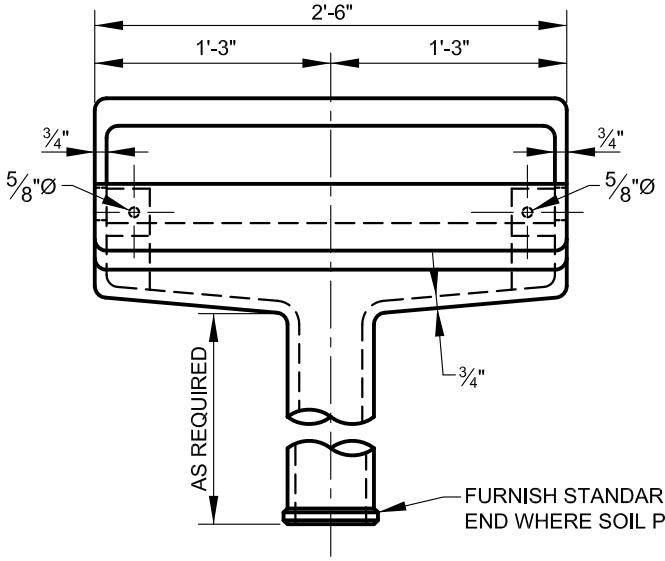

ELEVATION

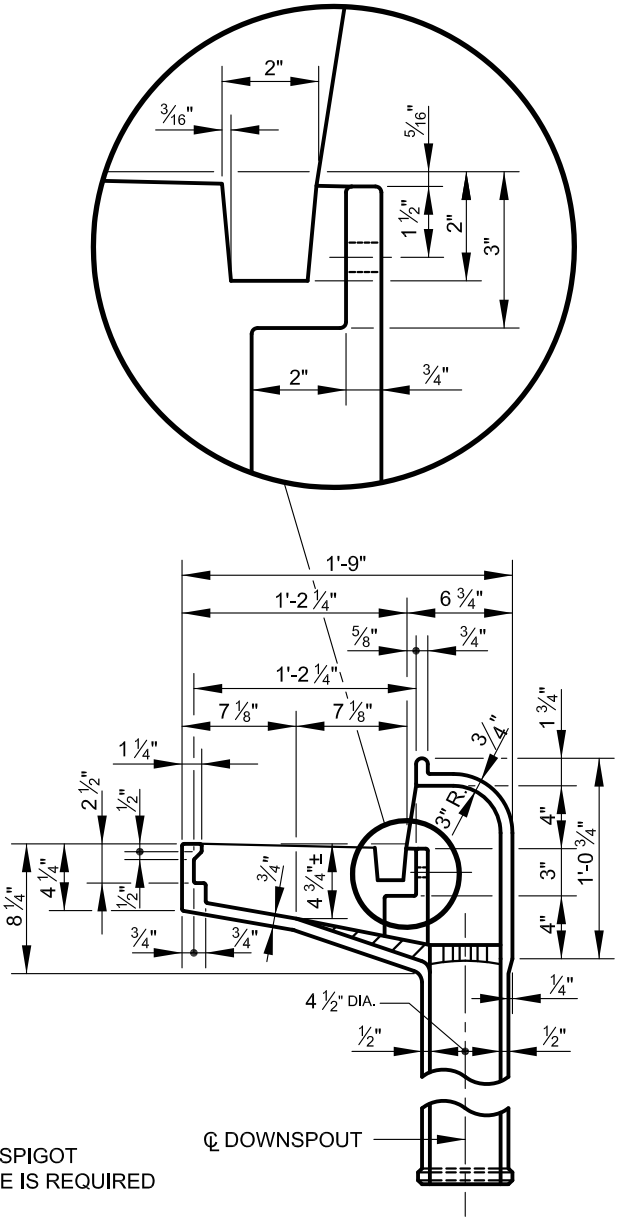

SECTION A-A

STANDARD SCUPPER TYPE 'C'

FOR GENERAL NOTES AND GRATING DETAILS
SEE STANDARD NO. BC 437.03

APPROVED :

DIVISION CHIEF, TRANSPORTATION ENGINEERING AND CONSTRUCTION

DIRECTOR, DEPARTMENT OF TRANSPORTATION

CITY OF BALTIMORE
DEPARTMENT OF TRANSPORTATION
TRANSPORTATION ENGINEERING AND CONSTRUCTION

STANDARD SCUPPER TYPE 'C'

ISSUED	REVISED	REVISED
8 / 2010		

STANDARD NO. BC 437.01

SCALE : NONE

SHEET 1 OF 1

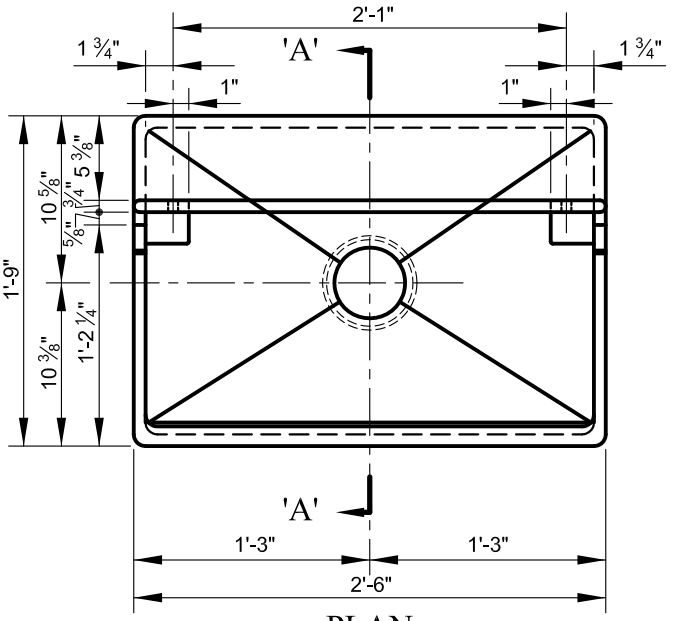

PLAN

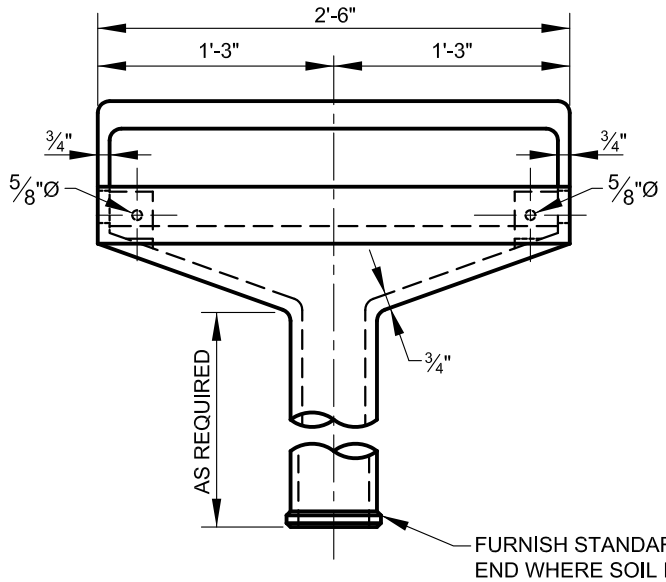

ELEVATION

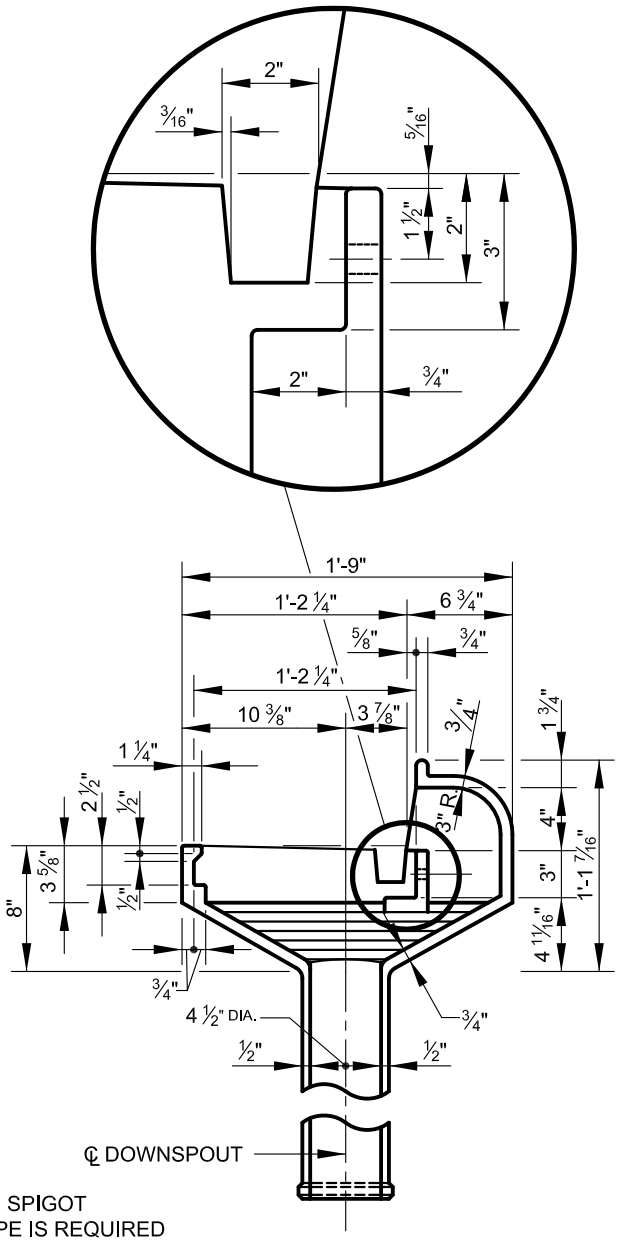

SECTION A-A

STANDARD SCUPPER TYPE 'D'

FOR GENERAL NOTES AND GRATING DETAILS
SEE STANDARD NO. BC 437.03

CITY OF BALTIMORE 1797	APPROVED: Bimal Devkota DIVISION CHIEF, TRANSPORTATION ENGINEERING AND CONSTRUCTION Khalil Zaid DIRECTOR, DEPARTMENT OF TRANSPORTATION	CITY OF BALTIMORE DEPARTMENT OF TRANSPORTATION TRANSPORTATION ENGINEERING AND CONSTRUCTION	ISSUED 8 / 2010	REVISED	REVISED
		STANDARD SCUPPER TYPE 'D'	STANDARD NO. BC 437.02		
			SCALE : NONE	SHEET 1 OF 1	

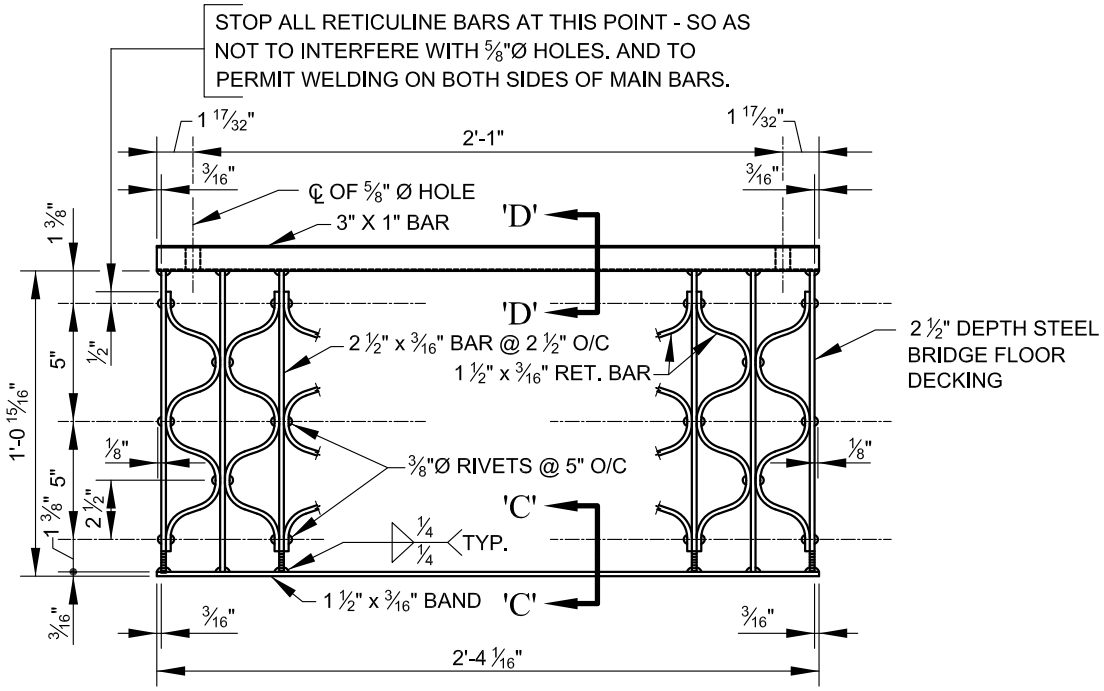

STANDARD SCUPPER GRATING

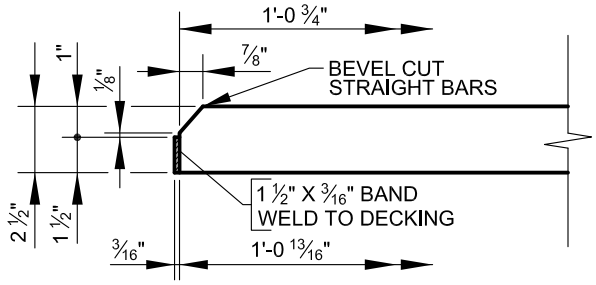

SECTION 'C-C'

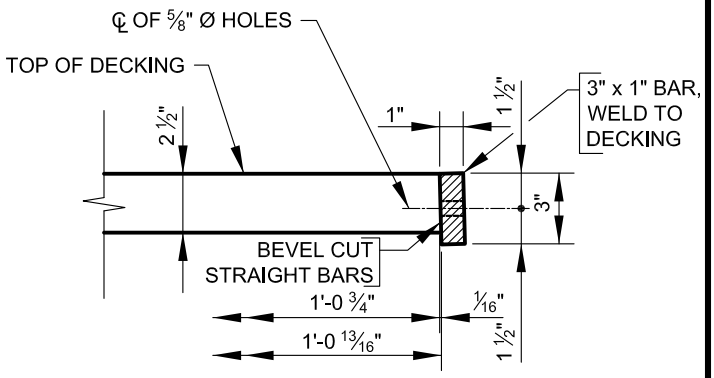

SECTION 'D-D'

NOTES:

MATERIAL: SCUPPER TO BE OF GRAY CAST IRON AS PER A.S.T.M. SERIAL DESIGNATION A48 CLASS 30B. GRATING TO BE STRUCTURAL STEEL, AS PER A.S.T.M. SERIAL DESIGNATION A7, OR S.A.E. - 1010 CARBON STEEL.

WELDING: GRATINGS TO BE WELDED TO SCUPPERS.

PAINT: SCUPPERS AND GRATINGS SHALL BE PAINTED ONE SHOP COAT INSIDE AND OUTSIDE. SHOP PAINT SHALL COMPLY WITH A.A.S.H.T.O., DESIGNATION M-72, TYPE I OR TYPE II, EXCEPT THAT FOR TYPE I THE VISCOSITY SHALL NOT EXCEED 90 K.U. INSIDES OF SCUPPERS, HORIZONTAL SHOWING SURFACE IN ROADWAY AND GRATINGS TO BE PAINTED TWO COATS OF ASPHALT PAINT CONFORMING TO FEDERAL SPEC. TT-V-51a. VERTICAL SHOWING SURFACE IN CURB FACE TO BE PAINTED TWO COATS OF GRAY PAINT. OUTSIDE OF SCUPPERS EXPOSED TO ATMOSPHERE BELOW THE CONCRETE DECK SLAB SHALL RECEIVE THE SAME FIELD PAINT REQUIRED FOR STRUCTURAL STEEL, OR IN CASE THERE IS NO STRUCTURAL STEEL, SHALL BE PAINTED GRAY.

CITY OF BALTIMORE 1797	APPROVED: Bimal Devkota DIVISION CHIEF, TRANSPORTATION ENGINEERING AND CONSTRUCTION Khalil Zaid DIRECTOR, DEPARTMENT OF TRANSPORTATION	CITY OF BALTIMORE DEPARTMENT OF TRANSPORTATION TRANSPORTATION ENGINEERING AND CONSTRUCTION	ISSUED 8 / 2010	REVISED	REVISED
		STANDARD SCUPPER GRATING	STANDARD NO. BC 437.03		
			SCALE : NONE	SHEET 1 OF 1	

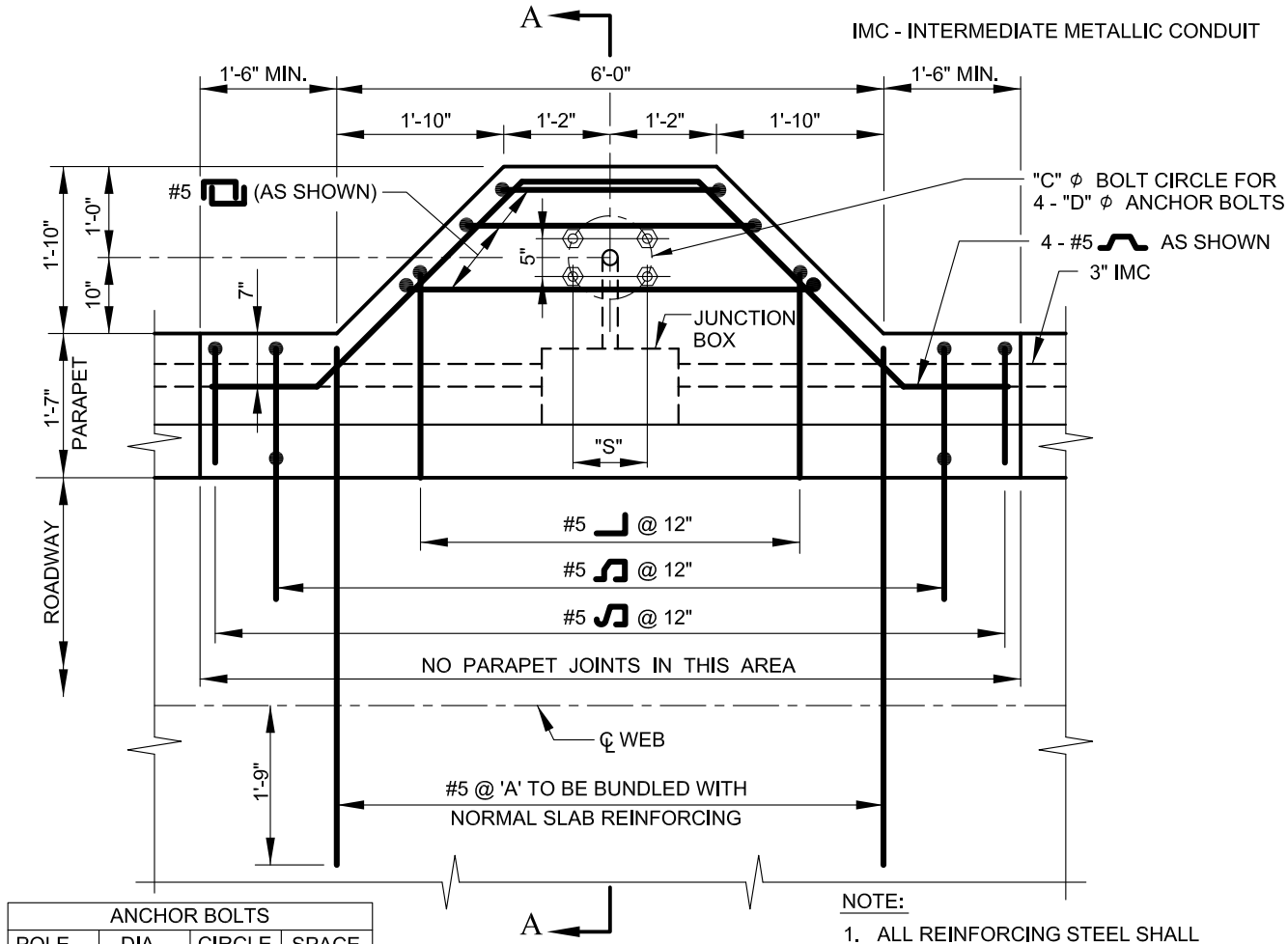

ANCHOR BOLTS			
POLE "HT"	DIA. "D"	CIRCLE "C"	SPACE "S"
30'	1"	11"	7 ¾"
40'	1 ¼"	15"	10 ⅝"

NOTE:

1. ALL REINFORCING STEEL SHALL BE EPOXY COATED.

PLAN

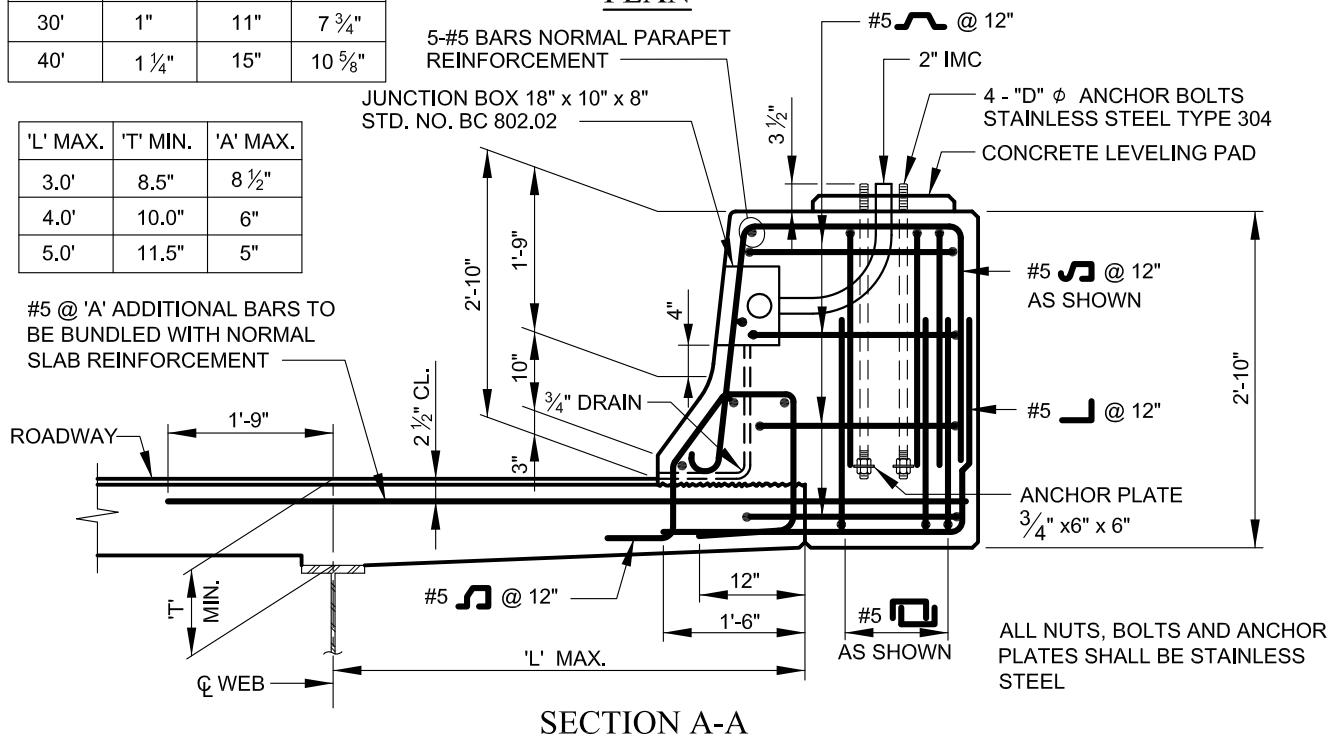

'L' MAX.	'T' MIN.	'A' MAX.
3.0'	8.5"	8 ½"
4.0'	10.0"	6"
5.0'	11.5"	5"

ALL NUTS, BOLTS AND ANCHOR PLATES SHALL BE STAINLESS STEEL

SECTION A-A

APPROVED:

DIVISION CHIEF, TRANSPORTATION ENGINEERING AND CONSTRUCTION

DIRECTOR, DEPARTMENT OF TRANSPORTATION

CITY OF BALTIMORE
DEPARTMENT OF TRANSPORTATION
TRANSPORTATION ENGINEERING AND CONSTRUCTION

ISSUED	REVISED	REVISED
8 / 2010		

SUPPORT BRACKET FOR BRIDGE MOUNTED 30'-40' LIGHT POLES ON JERSEY BARRIER

STANDARD NO.
BC 440.01

SCALE : NONE

SHEET 1 OF 1

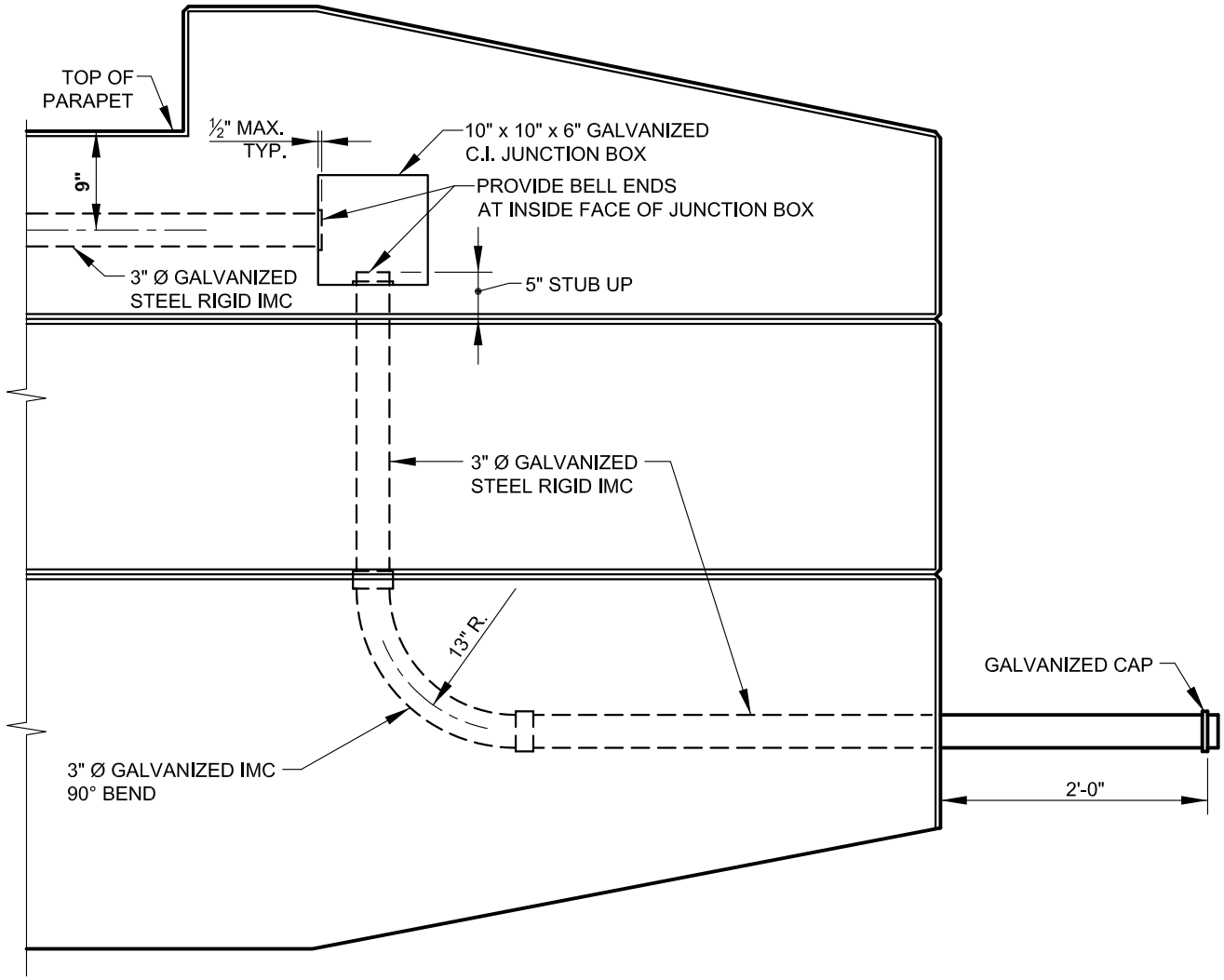

END OF BRIDGE PARAPET DETAILS

APPROVED:

DIVISION CHIEF, TRANSPORTATION ENGINEERING AND CONSTRUCTION

DIRECTOR, DEPARTMENT OF TRANSPORTATION

CITY OF BALTIMORE
DEPARTMENT OF TRANSPORTATION
TRANSPORTATION ENGINEERING AND CONSTRUCTION

BRIDGE LIGHTING CONDUIT DETAILS

ISSUED	REVISED	REVISED
8 / 2010		

STANDARD NO. BC 440.03

SCALE : NONE

SHEET 1 OF 1

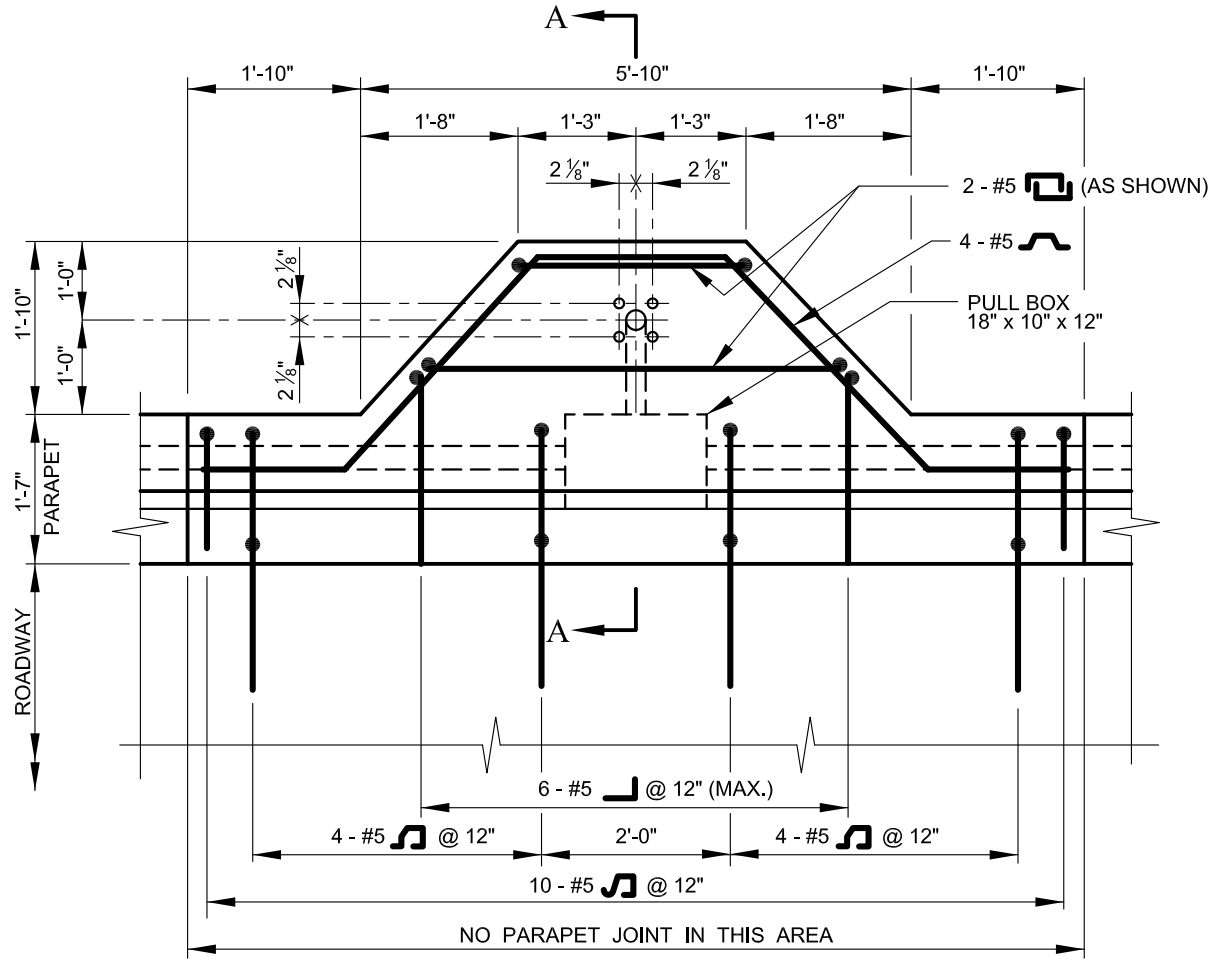

PLAN

NOTE:

1. ALL REINFORCING STEEL SHALL BE EPOXY COATED.

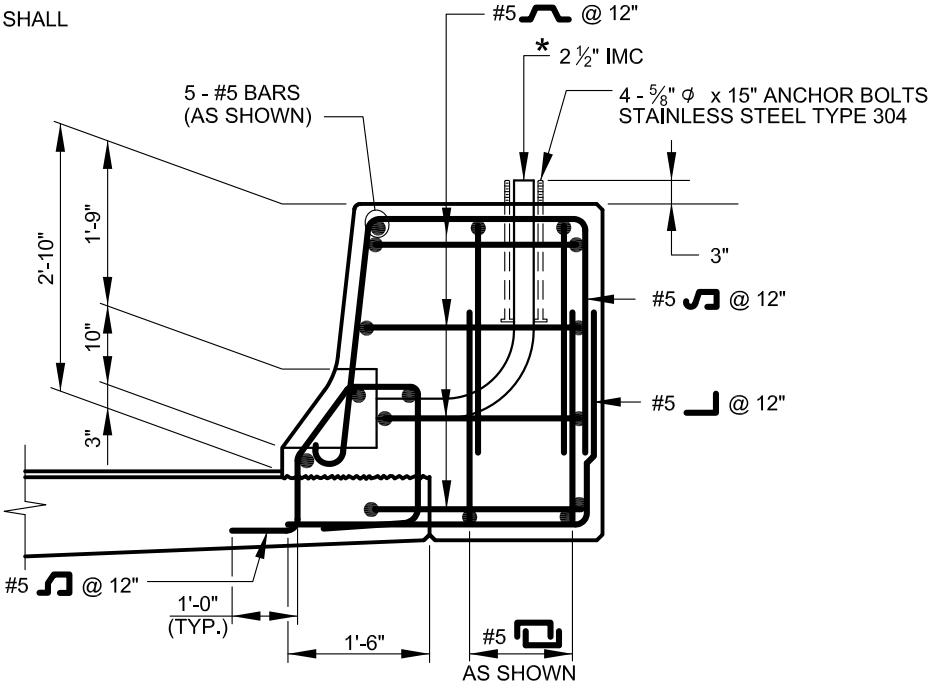

NOTE:

* TWO IMC'S ARE PREFERABLE FOR A CONTROLLER CABINET PULL BOX, ONE FOR LIGHTING AND ONE FOR POWER.

SECTION A-A

APPROVED:

DIVISION CHIEF, TRANSPORTATION ENGINEERING AND CONSTRUCTION

DIRECTOR, DEPARTMENT OF TRANSPORTATION

CITY OF BALTIMORE
DEPARTMENT OF TRANSPORTATION
TRANSPORTATION ENGINEERING AND CONSTRUCTION

ISSUED	REVISED	REVISED
8 / 2010		

CONTROLLER CABINET SUPPORT

STANDARD NO.
BC 440.04

SCALE : NONE

SHEET 1 OF 1

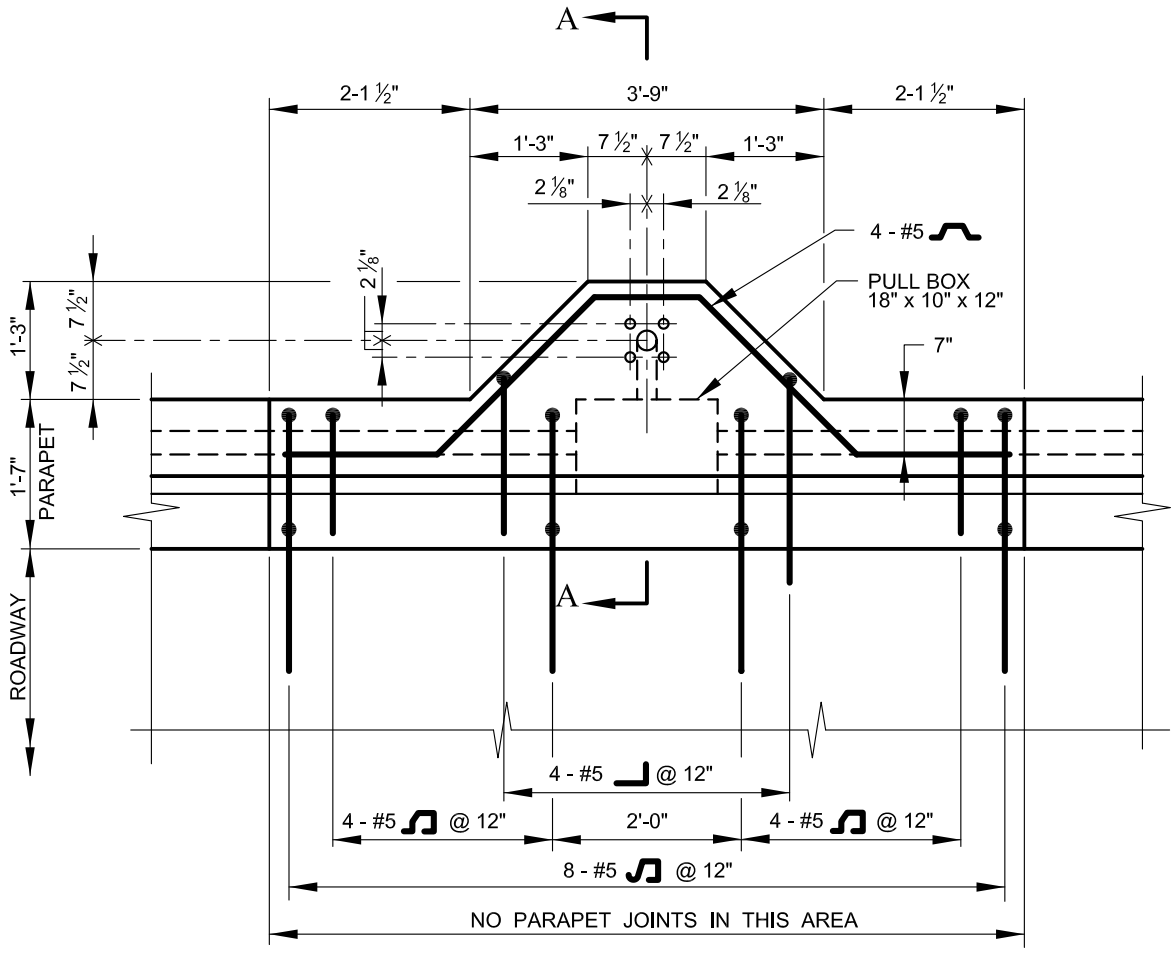

PLAN

NOTE:

1. ALL REINFORCING STEEL SHALL BE EPOXY COATED.

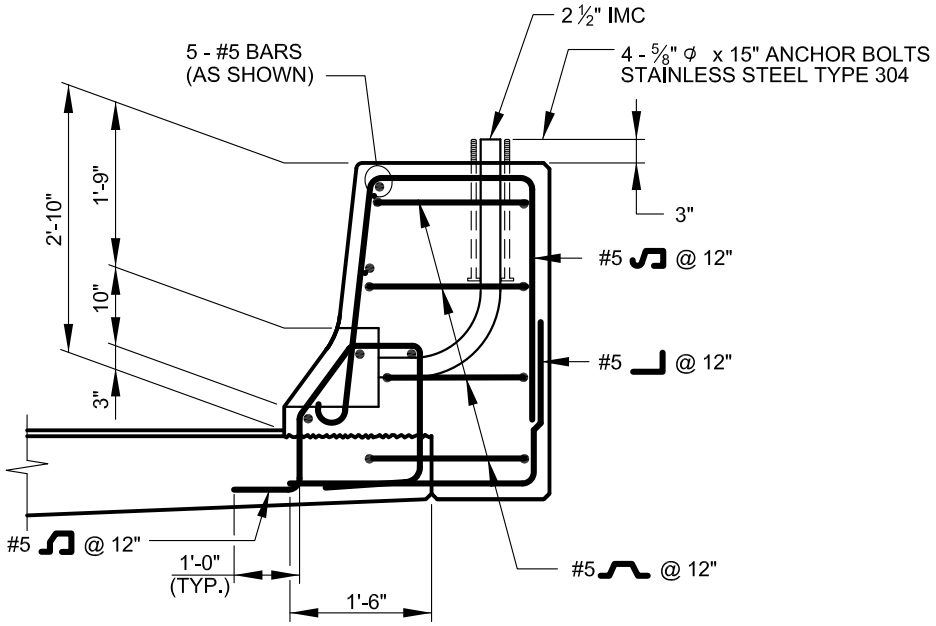

SECTION A-A

APPROVED:

DIVISION CHIEF, TRANSPORTATION ENGINEERING AND CONSTRUCTION

DIRECTOR, DEPARTMENT OF TRANSPORTATION

CITY OF BALTIMORE
DEPARTMENT OF TRANSPORTATION
TRANSPORTATION ENGINEERING AND CONSTRUCTION

ISSUED	REVISED	REVISED
8 / 2010		

EMERGENCY TELEPHONE SUPPORT

STANDARD NO.
BC 440.05

SCALE : NONE

SHEET 1 OF 1

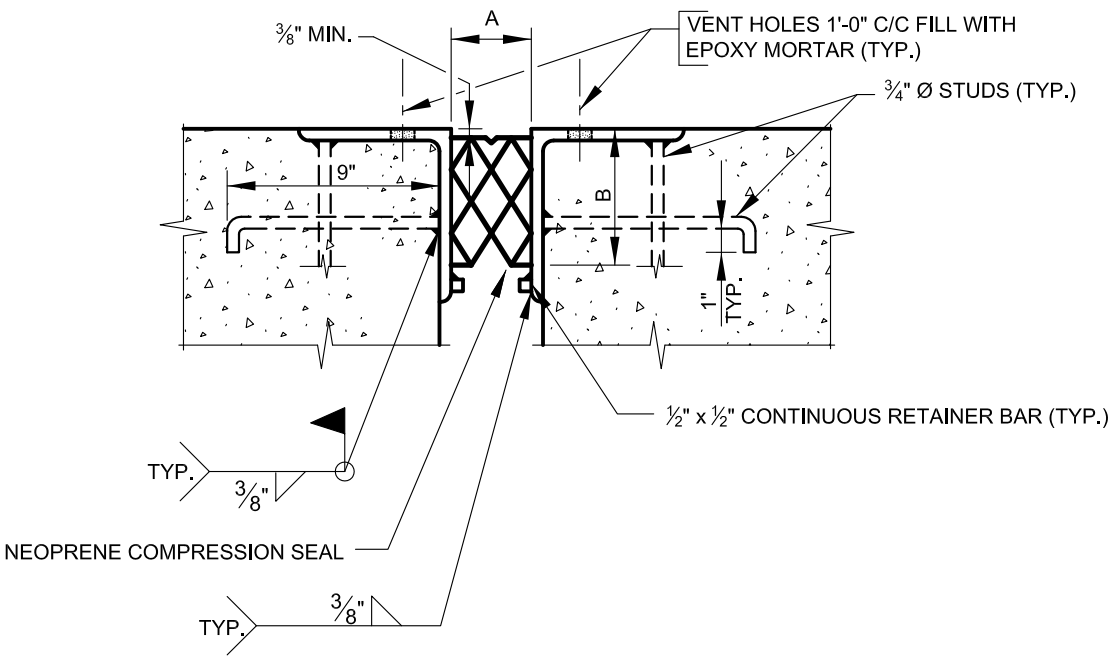

DIMENSION IN INCHES

TOTAL MOVEMENT	SEAL SIZE		JOINT WIDTH "A"		JOINT WIDTH "A" AT 70° F.	JOINT DEPTH "B"	MIN. JOINT WIDTH "A" DURING INSTALLATION
	WIDTH	HEIGHT	MIN.	MAX.			
1.664	4	4 23/32	1.736	3.4	2.331	6	2 5/8
1.649	3 1/2	3 1/2	1.331	2.98	1.920	4 3/4	2 1/4
1.219	3	3 13/32	1.331	2.55	1.767	4 1/2	2
.982	2 1/2	2 3/4	1.143	2.125	1.494	3 3/4	1 3/4
.770	2 1/4	2 5/8	1.143	1.913	1.418	3 1/2	1 5/8
1.072	2	2 1/16	.628	1.70	1.000	2 3/4	1
.780	2	2 1/16	.920	1.70	1.199	2 3/4	1 5/16
.627	1 3/4	2	.860	1.487	1.084	2 3/4	1 1/8
.753	1 5/8	1 5/8	.628	1.381	.896	2 3/8	1
.546	1 3/8	1 1/2	.623	1.169	.818	2	7/8

NOTES:

1. TOTAL MOVEMENT DUE TO EXPANSION AND CONTRACTION IS BASED ON A TEMPERATURE RANGE FROM +120°F. TO -20° F.
2. VALUES SHOWN IN TABLE ARE FOR 0° SKEW.

APPROVED:

DIVISION CHIEF, TRANSPORTATION ENGINEERING AND CONSTRUCTION

DIRECTOR, DEPARTMENT OF TRANSPORTATION

CITY OF BALTIMORE
DEPARTMENT OF TRANSPORTATION
TRANSPORTATION ENGINEERING AND CONSTRUCTION

ISSUED	REVISED	REVISED
8 / 2010		

SINGLE CELL MODULAR COMPRESSION SEAL FOR ROADWAY JOINTS

STANDARD NO.
BC 445.01

SCALE : NONE

SHEET 1 OF 1

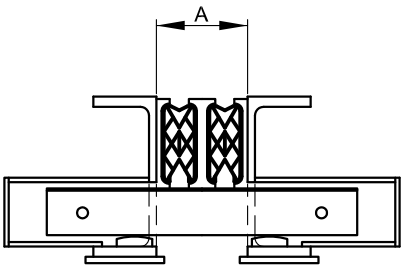

2 CELL

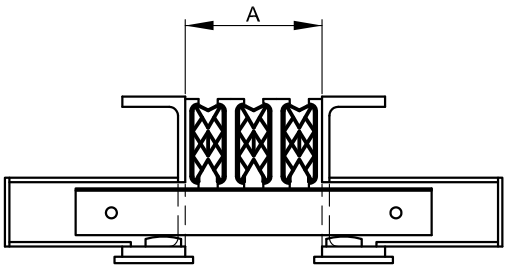

3 CELL

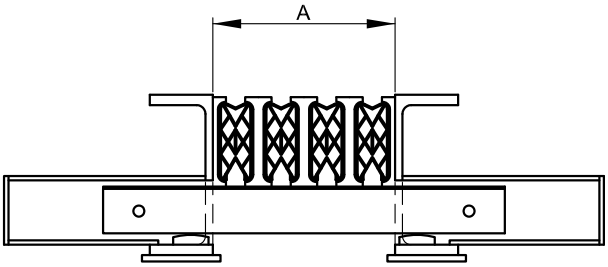

4 CELL

DIMENSION IN INCHES

TYPE	TOTAL ALLOWABLE MOVEMENT	JOINT "A" WIDTH		REQUIRED PRESET WIDTH 'A' OF EXPANSION JOINT @ :						
		MIN.	MAX.	30°	40°	50°	60°	70°	80°	90°
2 CELL	3.00"	4.125	7.125	5.925	5.725	5.525	5.325	5.125	4.925	4.725
3 CELL	4.50"	6.125	10.625	8.825	8.525	8.225	7.925	7.625	7.325	7.025
4 CELL	6.00"	8.125	14.125	11.725	11.325	10.925	10.525	10.125	9.725	9.325

THE ABOVE CHART IS BASED ON THE FOLLOWING:

1. THE MAXIMUM ALLOWABLE MOVEMENT FOR EACH SEALER IS 1 ½"
2. THE SEALERS ARE FACTORY BONDED TO THE STEEL WITH BON-LASTIC ADHESIVE.
3. THE MOVEMENT DUE TO EXPANSION AND CONTRACTION IS BASED ON A TEMPERATURE RANGE FROM +120°F TO -30°F.
4. THE COEFFICIENT OF EXPANSION IS 6×10^{-6} °F.

NOTE:

IF MOVEMENTS, SUCH AS JOINT SHRINKAGE, CREEP DUE TO PRESTRESSING, PROGRESSIVE CLOSURE, PROGRESSIVE OPENING OF THE JOINT WIDTH IS TO BE ANTICIPATED, THEN THE ABOVE CHART SHOULD BE RECALCULATED WITH THE MIN. & MAX. WIDTH 'A' USED AS A GUIDE.

APPROVED:

DIVISION CHIEF, TRANSPORTATION ENGINEERING AND CONSTRUCTION

DIRECTOR, DEPARTMENT OF TRANSPORTATION

CITY OF BALTIMORE
DEPARTMENT OF TRANSPORTATION
TRANSPORTATION ENGINEERING AND CONSTRUCTION

MULTI-CELL MODULAR COMPRESSION SEAL FOR ROADWAY JOINTS

ISSUED	REVISED	REVISED
8 / 2010		

STANDARD NO.
BC 446.01

SCALE : NONE

SHEET 1 OF 1

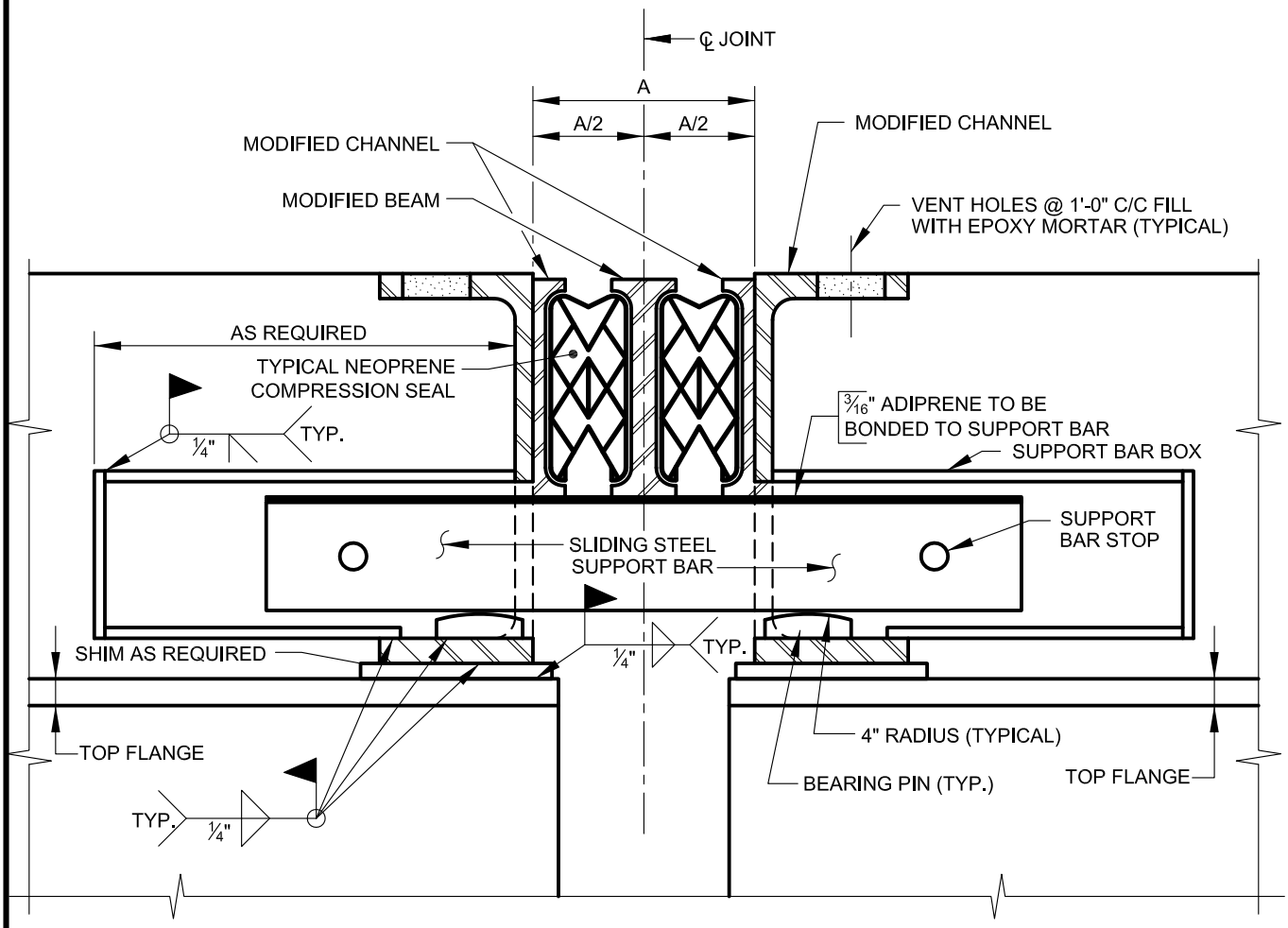

2 CELL DETAIL

(3 & 4 CELL DETAILS SIMILAR)

FOR DIMENSION A & DETAILS, SEE STD. NO. BC 446.01

APPROVED:

DIVISION CHIEF, TRANSPORTATION ENGINEERING AND CONSTRUCTION

DIRECTOR, DEPARTMENT OF TRANSPORTATION

CITY OF BALTIMORE
DEPARTMENT OF TRANSPORTATION
TRANSPORTATION ENGINEERING AND CONSTRUCTION

ISSUED	REVISED	REVISED
8 / 2010		

MULTI-CELL DETAILS

STANDARD NO.
BC 446.02

SCALE : NONE

SHEET 1 OF 1

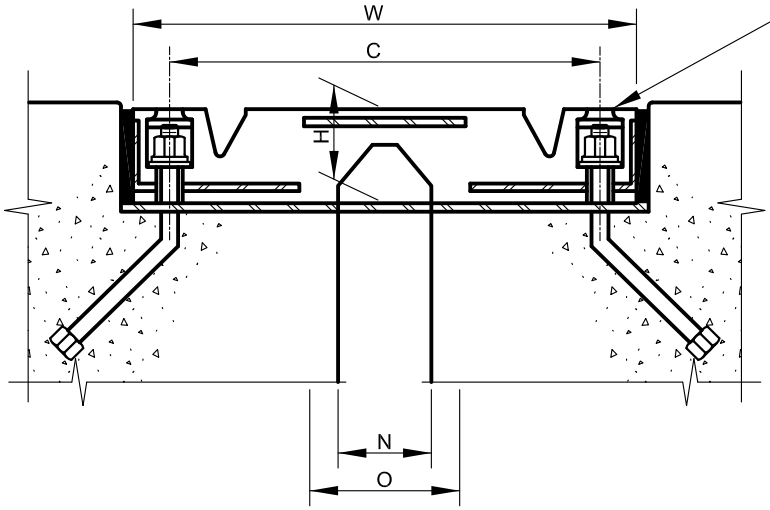

TYPE I & II

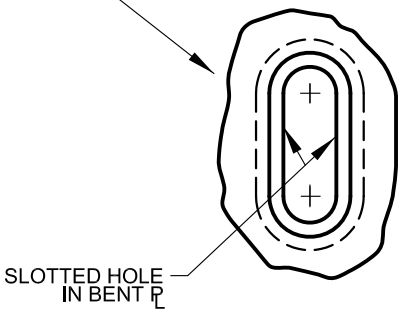

PLAN VIEW
TYPICAL PLUGGED SOCKET

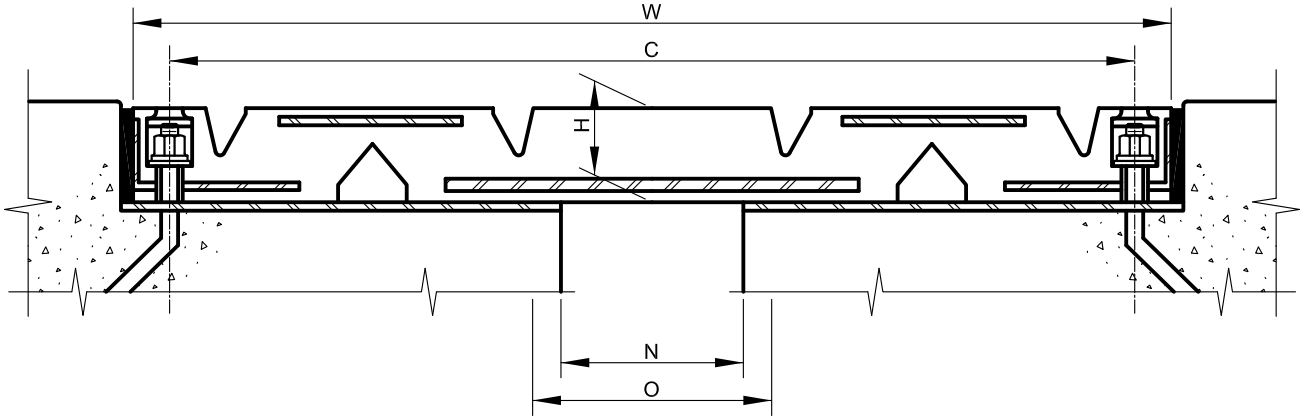

TYPE III, IV, V & VI

DIMENSION IN INCHES

TYPE	TOTAL MOVEMENT	SEAL SIZE		"N" MAX. OPENING @ 50°	"O" MAX. OPENING FULLY EXTENDED	"C"
		W	H			
I	2.00	10 3/8	1 9/16	2.00	3.00	8.625
II	2.50	13 1/2	1 13/16	2.625	3.875	11.00
III	4.00	22 3/4	2 1/8	4.00	6.00	19.625
IV	6.00	28	3	4.75	8.00	24.25
V	9.00	34 7/8	3 3/4	6.25	10.75	31.00
VI	13.00	47	5	8.50	15.00	42.50

APPROVED:

DIVISION CHIEF, TRANSPORTATION ENGINEERING AND CONSTRUCTION

DIRECTOR, DEPARTMENT OF TRANSPORTATION

CITY OF BALTIMORE
DEPARTMENT OF TRANSPORTATION
TRANSPORTATION ENGINEERING AND CONSTRUCTION

ISSUED	REVISED	REVISED
8 / 2010		

TRANSFLEX COMPRESSION SEAL FOR ROADWAY JOINTS

STANDARD NO.
BC 447.01

SCALE : NONE

SHEET 1 OF 1

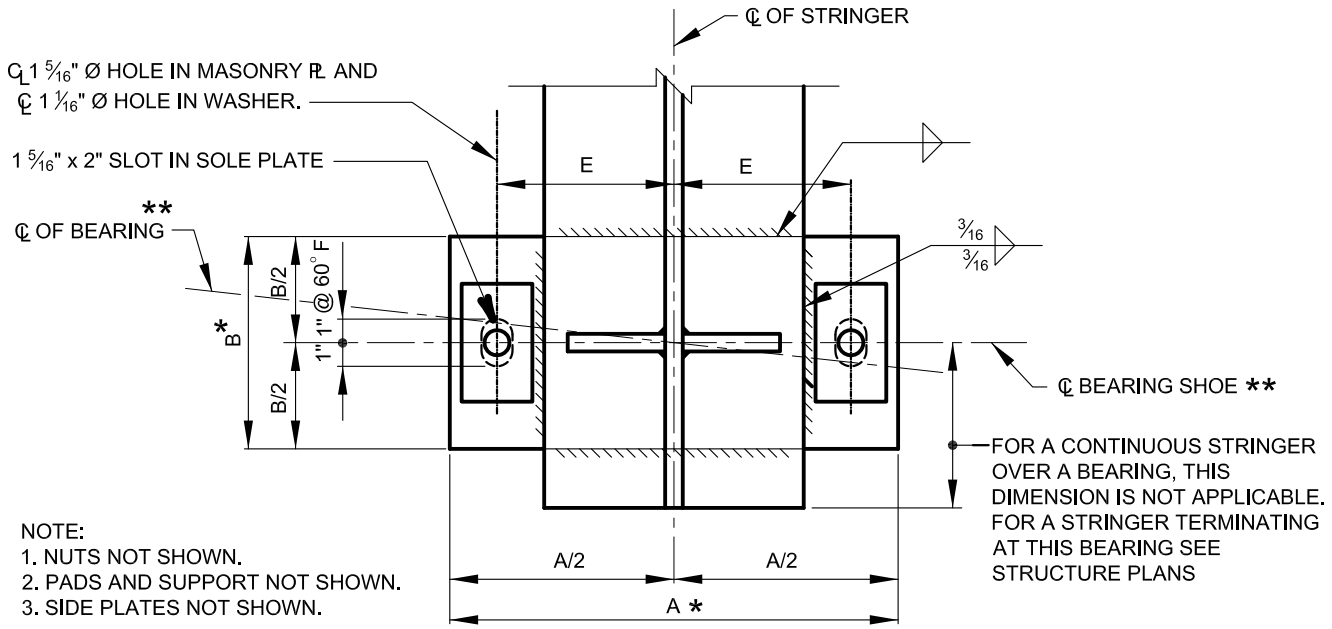

PLAN
SCALE: NONE

DATA SCHEDULE

TYPE	SOLE PLATE			MASONRY PL			HOLE LOC.	HGT.	LOADS (KIPS)	
	A	B	C	A	B	D	E	F	VERT.	DEAD
SE36 - I	17	9	1	17	9	1	6 ½"	2	70	16
SE36 - II	19	9	1	19	9	1	7 ½"	2	85	23
SE36 - III	21	9	1	21	9	1	8 ½"	2	100	34

NOTE: ALL DIMENSIONS ARE IN INCHES.

NOTE:
1. SOLE AND MASONRY PLATES TO BE ASTM A 709 GRADE 36 STEEL PAINTED TO MATCH FINISHED BRIDGE COLOR.
2. FILL SLOTS AND HOLES AROUND ANCHOR BOLTS WITH NONHARDENING CAULKING COMPOUND OR ELASTIC JOINT SEALER.
3. 1000 RMS (FINISH ALL OVER) EXCEPT WHERE OTHERWISE NOTED.
4. DESIGN BEARING LOAD 0.7 KSI.
5. TOP OF SOLE PLATE MUST BE BEVELED TO FIT GRADE OF BOTTOM FLANGE. IF SOLE PLATE MUST BE BEVELED, DIMENSION 'C' SHALL BE MEASURED AT ℄ OF BEARING.
6. UNLESS OTHERWISE NOTED, BEARINGS SHALL BE PLACED NORMAL TO C OF STRINGER.
7. PLATES ARE TO BE SHIPPED AS UNITS.
8. IF MORE THAN ONE SIZE BEARING IS CALLED FOR, CONTRACTOR MAY FURNISH ALL BEARINGS OF LARGER SIZE PROVIDED THE BEARING PADS ARE ALTERED TO ACCOMMODATE SAME. NO INCREASE IN ANY PRICES BID WILL BE ALLOWED IF THIS OPTION IS SELECTED.
9. THIS BEARING FOR USE ON SIMPLE SPAN STEEL STRINGER BRIDGES LESS THAN 50'-0" LONG AND/OR COMPARABLE CONTINUOUS SPAN LENGTHS.
10. ALL ANCHOR BOLTS AND WASHERS SHALL BE UNPAINTED ASTM A 709 GRADE 36 GALVANIZED STEEL. ALL NUTS SHALL BE UNPAINTED ASTM A 307 GALVANIZED STEEL.

* EDGE MAY BE LEFT AS CUT OR CAST.
** WHERE BRIDGE IS NOT SKEWED. ℄ BEARING AND ℄ SHOE ARE COINCIDENT.

NOTE TO DESIGNER:
GRADE 36 BEARING ARE TO BE USED IN BRIDGE REHABILITATION PROJECTS ONLY.

APPROVED:
DIVISION CHIEF, TRANSPORTATION ENGINEERING AND CONSTRUCTION
DIRECTOR, DEPARTMENT OF TRANSPORTATION

CITY OF BALTIMORE
DEPARTMENT OF TRANSPORTATION
TRANSPORTATION ENGINEERING AND CONSTRUCTION

ISSUED	REVISED	REVISED
8 / 2010		

BEARING SHOE DETAILS SPANS LESS THAN 50' C/C BEARINGS

STANDARD NO.
BC 450.01-1

SCALE : NONE | SHEET 1 OF 2

APPROVED:

DIRECTOR, DEPARTMENT OF TRANSPORTATION

DIVISION CHIEF, TRANSPORTATION ENGINEERING AND CONSTRUCTION

CITY OF BALTIMORE
DEPARTMENT OF TRANSPORTATION
TRANSPORTATION ENGINEERING AND CONSTRUCTION

BEARING SHOE DETAILS
SPANS LESS THAN 50'
C/C BEARINGS

ISSUED	REVISED	REVISED
8 / 2010		

STANDARD NO.
BC 450.01-2

SCALE : NONE

SHEET 2 OF 2

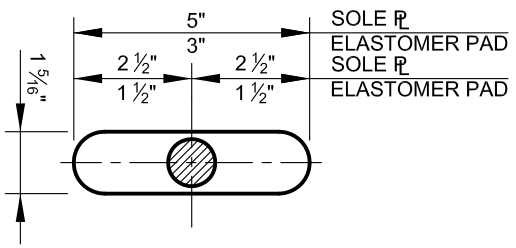

SLOTTED HOLE DETAIL

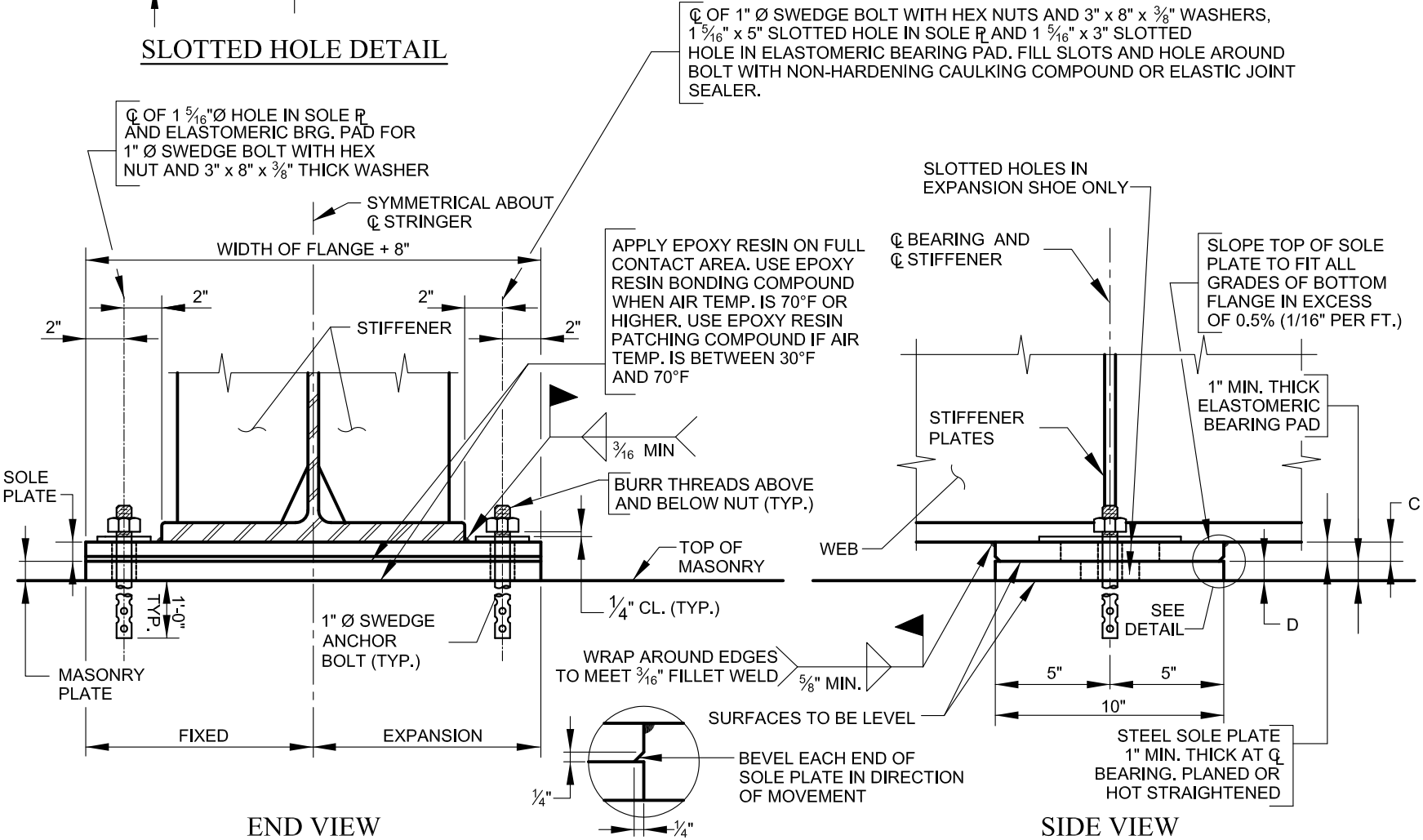

END VIEW

SIDE VIEW

ELASTOMERIC BEARING FOR STEEL BEAM SPANS LESS THAN 50' C/C BEARINGS

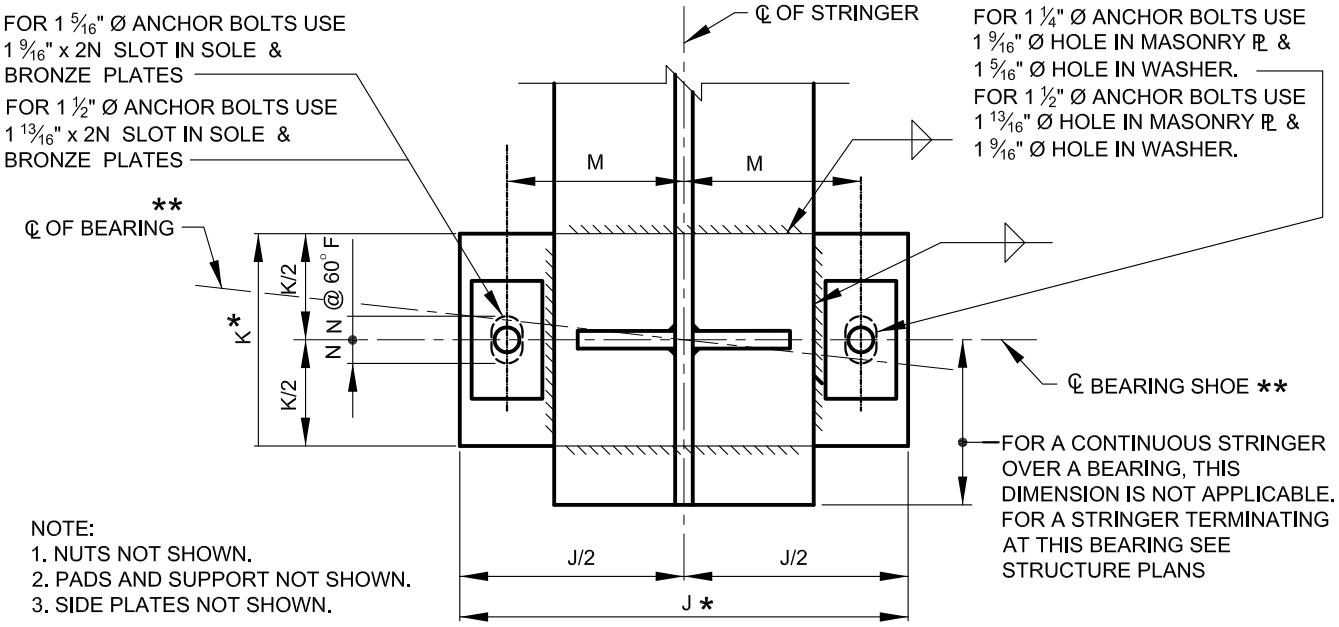

NOTE:
1. NUTS NOT SHOWN.
2. PADS AND SUPPORT NOT SHOWN.
3. SIDE PLATES NOT SHOWN.

PLAN
SCALE: NONE

DATA SCHEDULE

TYPE	SOLE PLATE			SLIDING PLATE				RADIUS	MASONRY PL			HOLE LOC.		HGT.	LOADS (KIPS)			TOTAL EXPANSION ± (0° F - 120°)
	A	B	C	D	E	F	G	H	J	K	L	M	N	P	VERT.	HORIZ.	DEAD	
ME36 - I	21	9 1/2	1 3/8	20	7 1/2	1 3/4	1 ±	11	21	11	1	8 1/2	1 1/2	3 3/4	150	15	75	1
ME36 - II	23	10 1/2	2	22	8 1/2	1 3/4	1 ±	12	23	12	1	9 1/2	1 1/2	3 3/4	200	20	100	1
ME36 - III	25	11 1/2	2	24	9 1/2	1 3/4	1 ±	15	25	13	1	10 1/2	1 1/2	3 3/4	250	25	125	1
ME36 - IV	26	13 1/2	2 3/8	25	11 1/2	2 1/8	1 ±	15	26	16	1	11	2	4 1/8	300	30	150	1 1/2
ME36 - V	29	15 1/2	2 1/2	28	13 1/2	2 3/8	1 ±	18	29	17	1 1/2	12 1/2	2	4 7/8	350	35	175	1 3/4
ME36 - VI	30	16 1/2	2 1/2	29	14 1/2	2 5/8	1 ±	18	30	20	1 1/2	13	2 1/4	5 1/8	400	40	200	2 1/4

NOTE: ALL DIMENSIONS ARE IN INCHES.

NOTE:
1. SOLE AND MASONRY PLATES TO BE ASTM A 709 GRADE 36 STEEL PAINTED TO MATCH FINISHED BRIDGE COLOR, CONVEX PLATE SHALL BE A SELF LUBRICATING BRONZE BEARING PLATE CONFORMING TO SPECIFICATION 03 15 15.
2. FILL SLOTS AND HOLES AROUND ANCHOR BOLTS WITH NONHARDENING CAULKING COMPOUND OR ELASTIC JOINT SEALER.
3. 1000 RMS (FINISH ALL OVER) EXCEPT WHERE OTHERWISE NOTED.
4. DESIGN BEARING LOAD 1.0 KSI.
5. TOP OF SOLE PLATE MUST BE BEVELED TO FIT GRADE OF BOTTOM FLANGE. IF SOLE PLATE MUST BE BEVELED, DIMENSION 'C' SHALL BE MEASURED AT ℄ OF BEARING.
6. UNLESS OTHERWISE NOTED, BEARINGS SHALL BE PLACED NORMAL TO ℄ OF STRINGER.
7. PLATES ARE TO BE SHIPPED AS UNITS.
8. IF MORE THAN ONE SIZE BEARING IS CALLED FOR, CONTRACTOR MAY FURNISH ALL BEARINGS OF LARGER SIZE PROVIDED THE BEARING PADS ARE ALTERED TO ACCOMMODATE SAME. NO INCREASE IN ANY PRICES BID WILL BE ALLOWED IF THIS OPTION IS SELECTED.
9. ALL ANCHOR BOLTS AND WASHERS SHALL BE UNPAINTED ASTM A 709 GRADE 36 GALVANIZED STEEL. ALL NUTS SHALL BE UNPAINTED ASTM A 307 GALVANIZED STEEL.
10. MEDIUM SPAN RANGE IS CONSIDERED 50' TO 150' SIMPLE SPAN LENGTHS AND COMPARABLE SPAN CONTINUOUS UNITS.

* EDGE MAY BE LEFT AS CUT OR CAST.
** WHERE BRIDGE IS NOT SKEWED. ℄ BEARING AND ℄ SHOE ARE COINCIDENT.

NOTE TO DESIGNER:
GRADE 36 BEARING ARE TO BE USED IN BRIDGE REHABILITATION PROJECTS ONLY.

APPROVED:
DIVISION CHIEF, TRANSPORTATION ENGINEERING AND CONSTRUCTION
DIRECTOR, DEPARTMENT OF TRANSPORTATION

CITY OF BALTIMORE
DEPARTMENT OF TRANSPORTATION
TRANSPORTATION ENGINEERING AND CONSTRUCTION

ISSUED	REVISED	REVISED
8 / 2010		

BEARING SHOE DETAILS SPANS 50' TO 150' C/C BEARINGS

STANDARD NO.
BC 451.01-1

SCALE : NONE

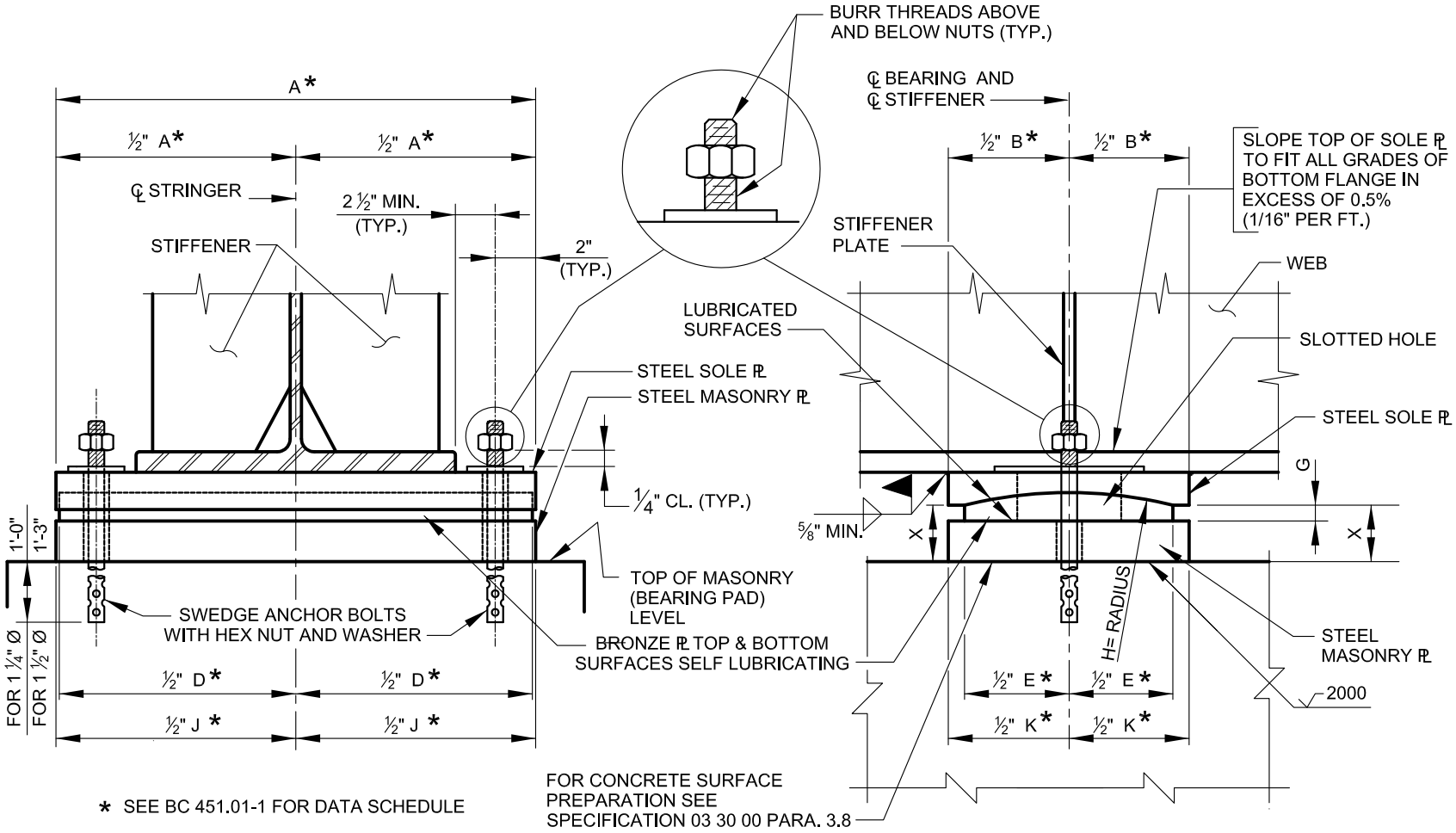

END VIEW

SIDE VIEW

BRONZE EXPANSION BEARING FOR STEEL BEAM SPANS OVER 50' C/C - SELF LUBRICATING

CITY OF BALTIMORE
DEPARTMENT OF TRANSPORTATION
TRANSPORTATION ENGINEERING AND CONSTRUCTION

BEARING SHOE DETAILS
SPANS 50' TO 150'
C/C BEARINGS

APPROVED:
DIVISION CHIEF, TRANSPORTATION ENGINEERING AND CONSTRUCTION
DIRECTOR, DEPARTMENT OF TRANSPORTATION

ISSUED	REVISED	REVISED
8 / 2010		

STANDARD NO.
BC 451.01-2

SCALE : NONE

APPROVED:

DIVISION CHIEF, TRANSPORTATION ENGINEERING AND CONSTRUCTION

DIRECTOR, DEPARTMENT OF TRANSPORTATION

CITY OF BALTIMORE
DEPARTMENT OF TRANSPORTATION
TRANSPORTATION ENGINEERING AND CONSTRUCTION

BEARING SHOE DETAILS
SPANS LESS THAN 150'
C/C BEARINGS

ISSUED	REVISED	REVISED
8 / 2010		

STANDARD NO.
BC 452.01

SCALE : NONE

SHEET 1 OF 1

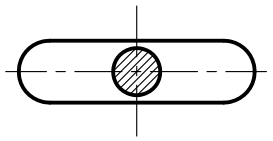

SLOTTED HOLE DETAIL

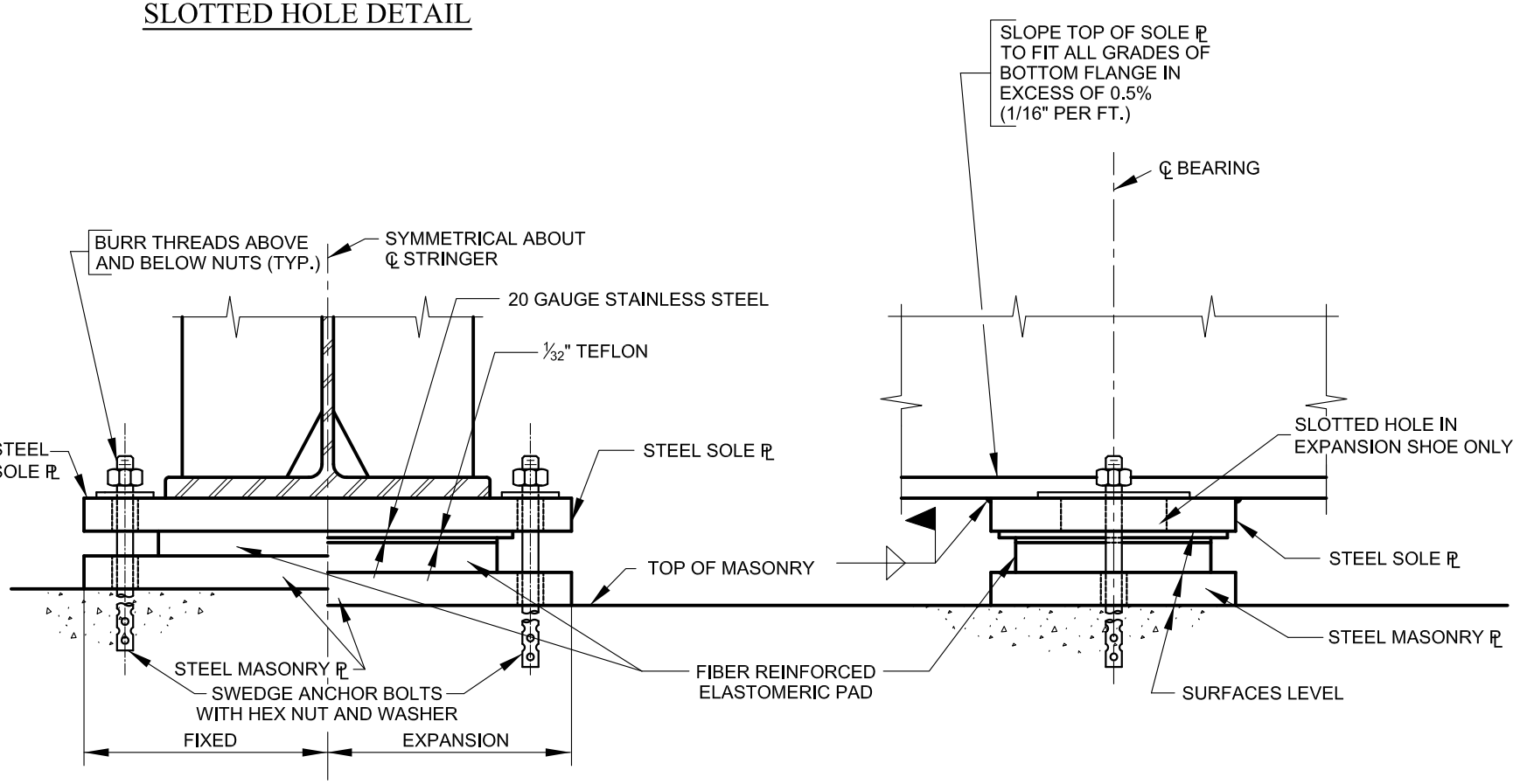

END VIEW

SIDE VIEW

ELASTOMERIC BEARING FOR STEEL BEAM SIMPLE AND CONTINUOUS SPANS LESS THAN 150' C/C BEARINGS

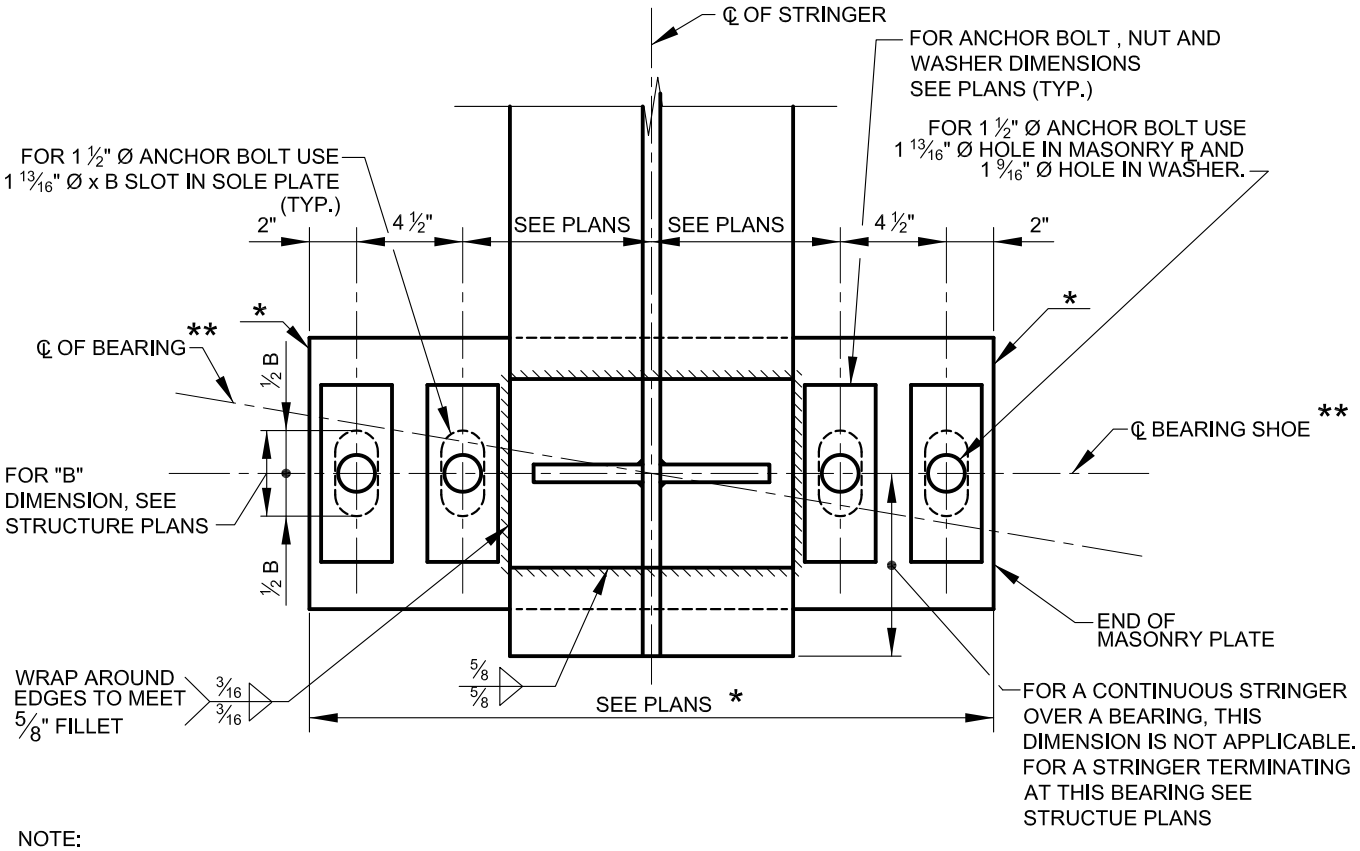

NOTE:
1. NUTS NOT SHOWN.
2. PADS AND SUPPORT NOT SHOWN.
3. SIDE PLATES NOT SHOWN.

PLAN
FOR ALL GIRDERS WITH SPAN LENGTHS 150' OR GREATER

SCALE: NONE

NOTE:
TO ACCOMMODATE AASHTO REQUIREMENTS, BEARINGS FOR GIRDERS 150' OR GREATER SHALL BE EXTENDED TO ACCOMMODATE 2 ADDITIONAL BOLTS. SIZE AND DETAILS OF ALL 4 ANCHOR BOLTS TO BE THE SAME AS THAT REQUIRED FOR 2 BOLT BEARINGS.

* EDGES MAY BE LEFT AS CUT OR CAST.

** WHERE BRIDGE IS NOT SKEWED. ℄ BRG. AND ℄ SHOE ARE COINCIDENT

APPROVED:

DIVISION CHIEF, TRANSPORTATION ENGINEERING AND CONSTRUCTION

DIRECTOR, DEPARTMENT OF TRANSPORTATION

CITY OF BALTIMORE
DEPARTMENT OF TRANSPORTATION
TRANSPORTATION ENGINEERING AND CONSTRUCTION

ISSUED	REVISED	REVISED
8 / 2010		

BEARING SHOE DETAILS
SPANS GREATER THAN 150'
C/C BEARINGS

STANDARD NO.
BC 453.01-1

SCALE : NONE

SHEET 1 OF 2

APPROVED:

DIVISION CHIEF, TRANSPORTATION ENGINEERING AND CONSTRUCTION

DIRECTOR, DEPARTMENT OF TRANSPORTATION

CITY OF BALTIMORE
DEPARTMENT OF TRANSPORTATION
TRANSPORTATION ENGINEERING AND CONSTRUCTION

BEARING SHOE DETAILS
SPANS GREATER THAN 150'
C/C BEARINGS

ISSUED	REVISED	REVISED
8 / 2010		

STANDARD NO.
BC 453.01-2

SCALE : NONE

SHEET 2 OF 2

NOTE: FOR PLAN DETAIL SEE BC 453.01-1

NOTE: SIZE OF STRINGERS, PLATES, WELDS AND ANCHOR BOLTS DEPENDENT UPON SPECIFIC DESIGN

NOTE: FOR CAP SCREW DETAIL SEE STD. NO. BC 454.01-2

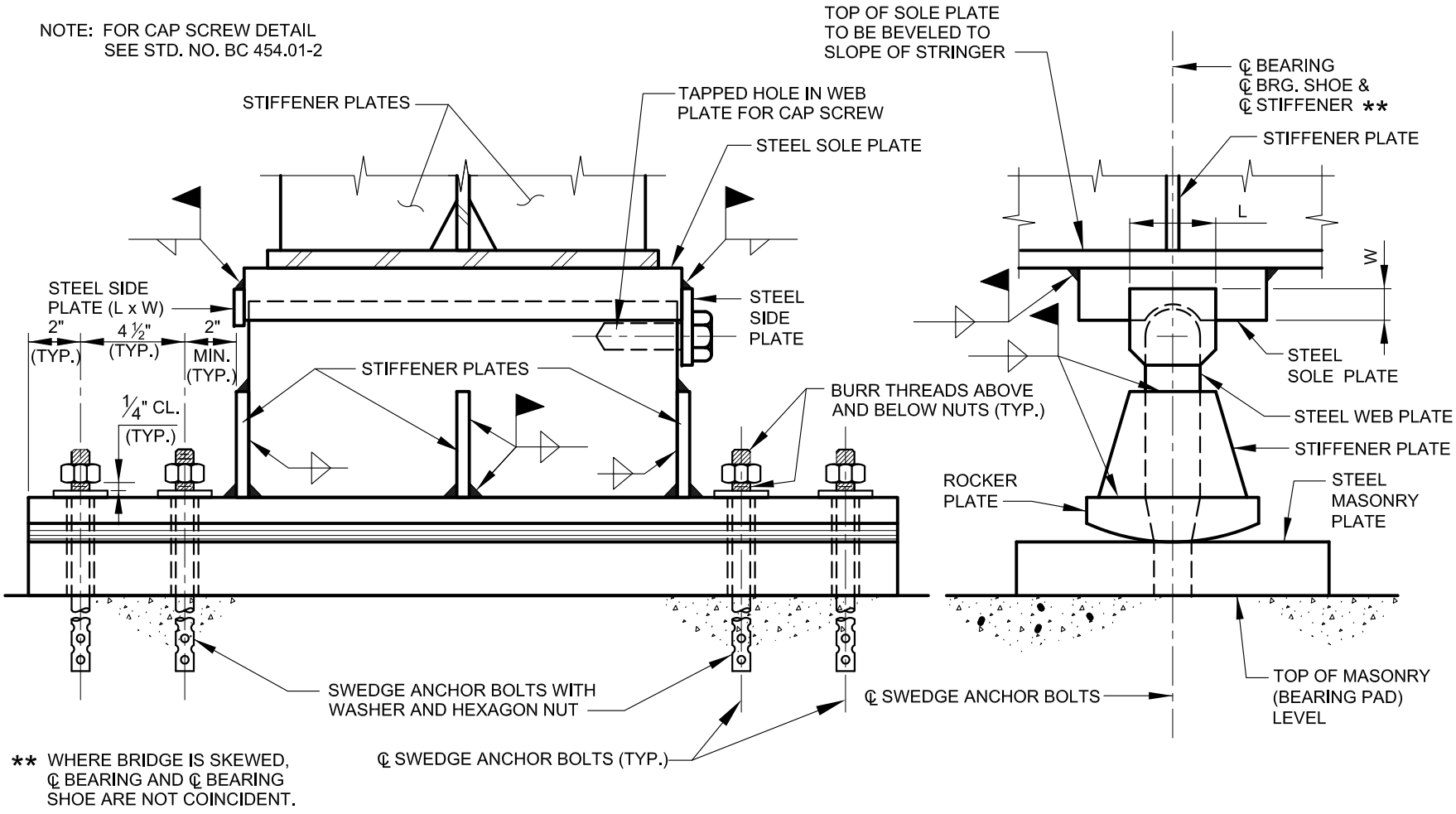

** WHERE BRIDGE IS SKEWED, ℄ BEARING AND ℄ BEARING SHOE ARE NOT COINCIDENT.

END VIEW

SIDE VIEW

EXPANSION BEARING FOR STEEL BEAM SIMPLE AND CONTINUOUS SPAN OVER 150' C/C BEARINGS

(ROCKER TYPE)

NOTE:
1. NUTS NOT SHOWN.
2. PADS AND SUPPORT NOT SHOWN.
3. SIDE PLATES NOT SHOWN.

NOTE:
FOR LONG SPAN BRIDGES, BEARINGS WILL HAVE TO BE SPECIALLY DESIGNED.

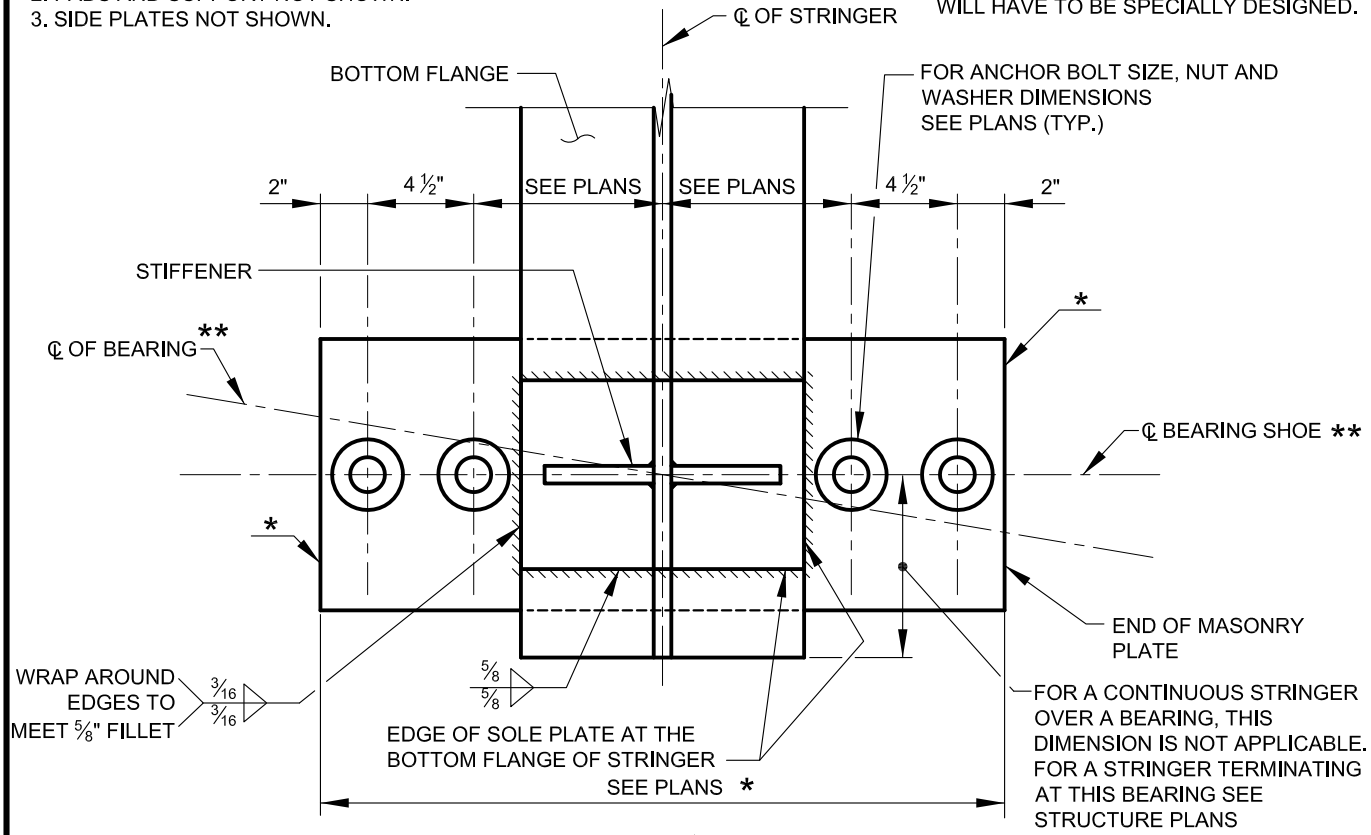

PLAN
FOR ALL GIRDERS WITH SPAN LENGTHS OVER 150'

SCALE: NONE

NOTE:
TO ACCOMMODATE AASHTO REQUIREMENTS, BEARINGS FOR GIRDERS GREATER THAN 150' SHALL BE EXTENDED TO ACCOMMODATE 2 ADDITIONAL BOLTS. SIZE AND DETAILS OF ALL 4 ANCHOR BOLTS TO BE THE SAME AS THAT REQUIRED FOR 2 BOLT BEARINGS.

NOTE:
1. SOLE AND MASONRY PLATES TO BE ASTM A 709 GRADE 36 STEEL PAINTED TO MATCH FINISHED BRIDGE COLOR,
2. FILL SLOTS AND HOLES AROUND ANCHOR BOLTS WITH NONHARDENING CAULKING COMPOUND OR ELASTIC JOINT SEALER.
3. 1000 RMS (FINISH ALL OVER) EXCEPT WHERE OTHERWISE NOTED.
4. ROTATION ½° ± MAXIMUM.
5. DESIGN MASONRY BEARING LOAD 0.1 KSI.
6. TOP OF SOLE PLATE MUST BE BEVELED TO FIT GRADE OF BOTTOM FLANGE.
7. UNLESS OTHERWISE NOTED, BEARINGS SHALL BE PLACED NORMAL TO ℄ OF STRINGER.
8. PLATES ARE TO BE SHIPPED AS UNITS.
9. IF MORE THAN ONE SIZE BEARING IS CALLED FOR, CONTRACTOR MAY FURNISH ALL BEARINGS OF LARGER SIZE PROVIDED THE BEARING PADS ARE ALTERED TO ACCOMMODATE SAME. NO INCREASE IN ANY PRICES BID WILL BE ALLOWED IF THIS OPTION IS SELECTED.
10. ALL ANCHOR BOLTS AND WASHERS SHALL BE UNPAINTED ASTM A 709 GRADE 36 GALVANIZED STEEL. ALL NUTS SHALL BE UNPAINTED ASTM A 307 GALVANIZED STEEL.

* EDGE MAY BE LEFT AS CUT OR CAST.
** WHERE BRIDGE IS NOT SKEWED. ℄ BEARING AND ℄ SHOE ARE COINCIDENT.

NOTE TO DESIGNER:
GRADE 36 BEARING ARE TO BE USED IN BRIDGE REHABILITATION PROJECTS ONLY.

APPROVED:
DIVISION CHIEF, TRANSPORTATION ENGINEERING AND CONSTRUCTION
DIRECTOR, DEPARTMENT OF TRANSPORTATION

CITY OF BALTIMORE
DEPARTMENT OF TRANSPORTATION
TRANSPORTATION ENGINEERING AND CONSTRUCTION

ISSUED	REVISED	REVISED
8 / 2010		

BEARING SHOE DETAILS SPANS GREATER THAN 150' C/C BEARINGS

STANDARD NO.
BC 454.01-1

SCALE : NONE

APPROVED:

DIVISION CHIEF, TRANSPORTATION ENGINEERING AND CONSTRUCTION

DIRECTOR, DEPARTMENT OF TRANSPORTATION

CITY OF BALTIMORE
DEPARTMENT OF TRANSPORTATION
TRANSPORTATION ENGINEERING AND CONSTRUCTION

BEARING SHOE DETAILS
SPANS GREATER THAN 150'
C/C BEARINGS

ISSUED	REVISED	REVISED
8 / 2010		

STANDARD NO.
BC 454.01-2

SCALE : NONE

SHEET 2 OF 2

NOTE: FOR PLAN DETAIL SEE BC 454.01-1

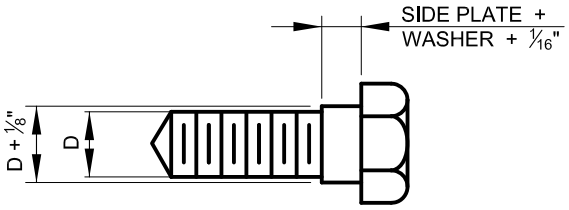

CAP SCREW

NOTE:
FOR LONG SPAN BRIDGES, BEARINGS WILL HAVE TO BE SPECIALLY DESIGNED.

NOTE: SIZE OF STRINGER PLATES, WELDS AND ANCHOR BOLTS DEPENDENT, UPON SPECIFIC DESIGN

NOTE: FOR CAP SCREW DETAIL SEE THIS SHEET

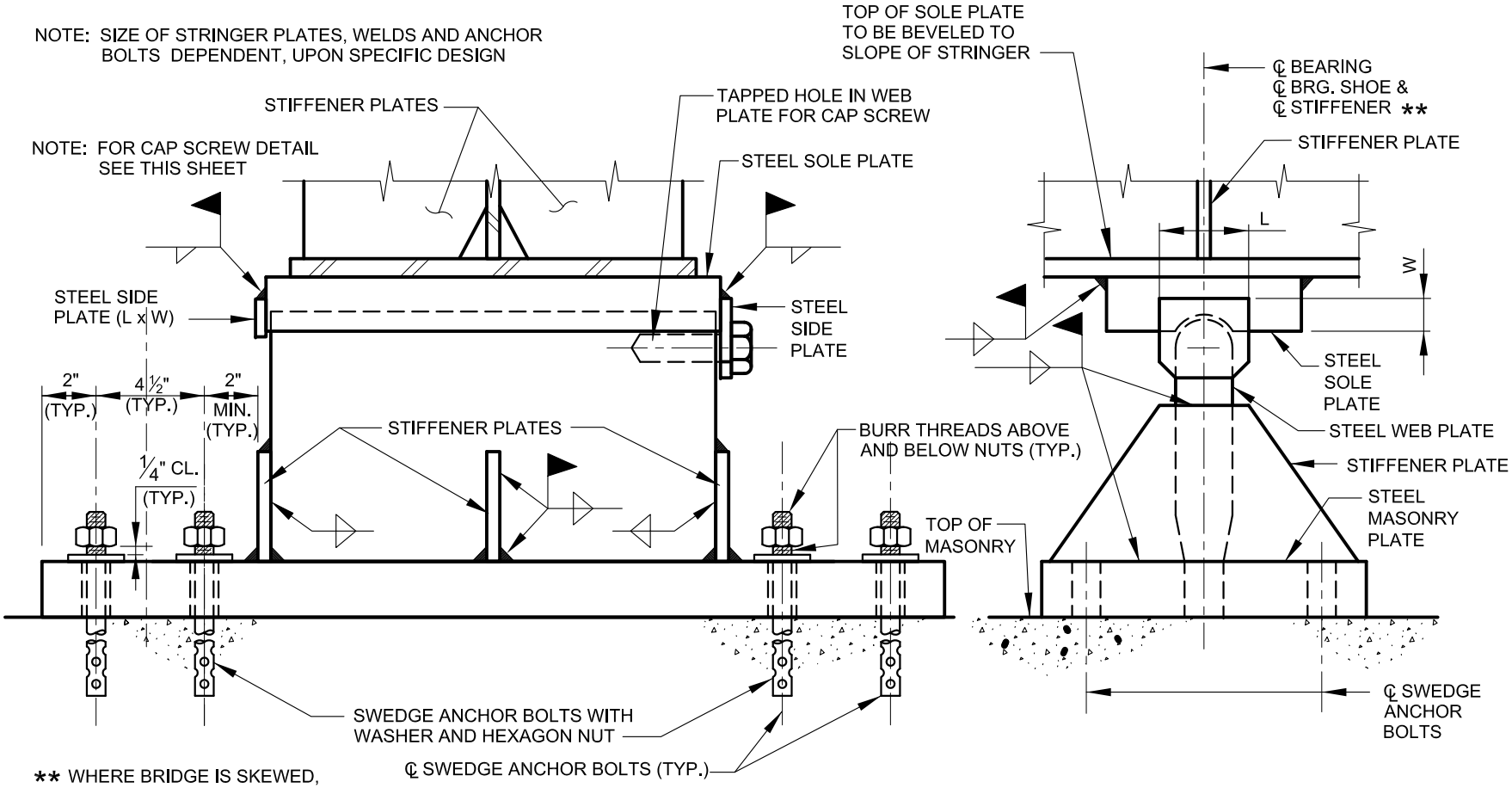

FIXED BEARING FOR STEEL BEAM SIMPLE AND CONTINUOUS SPAN OVER 150' C/C BEARINGS

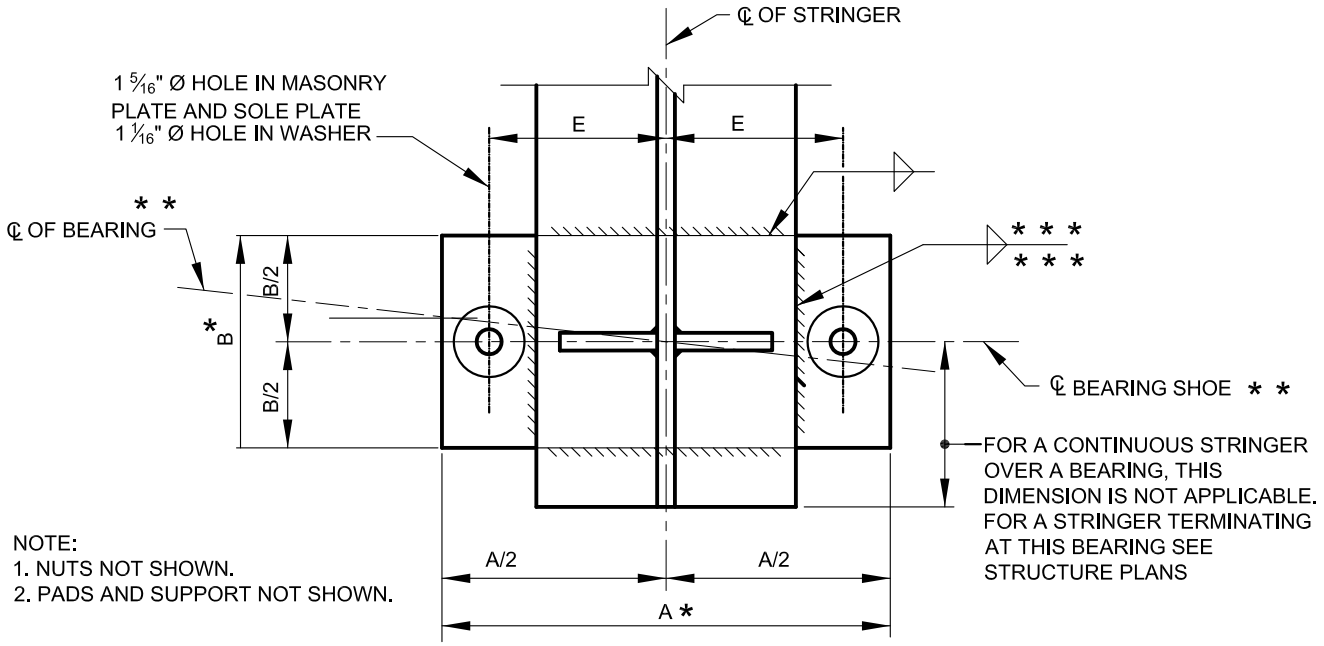

PLAN
SCALE: NONE

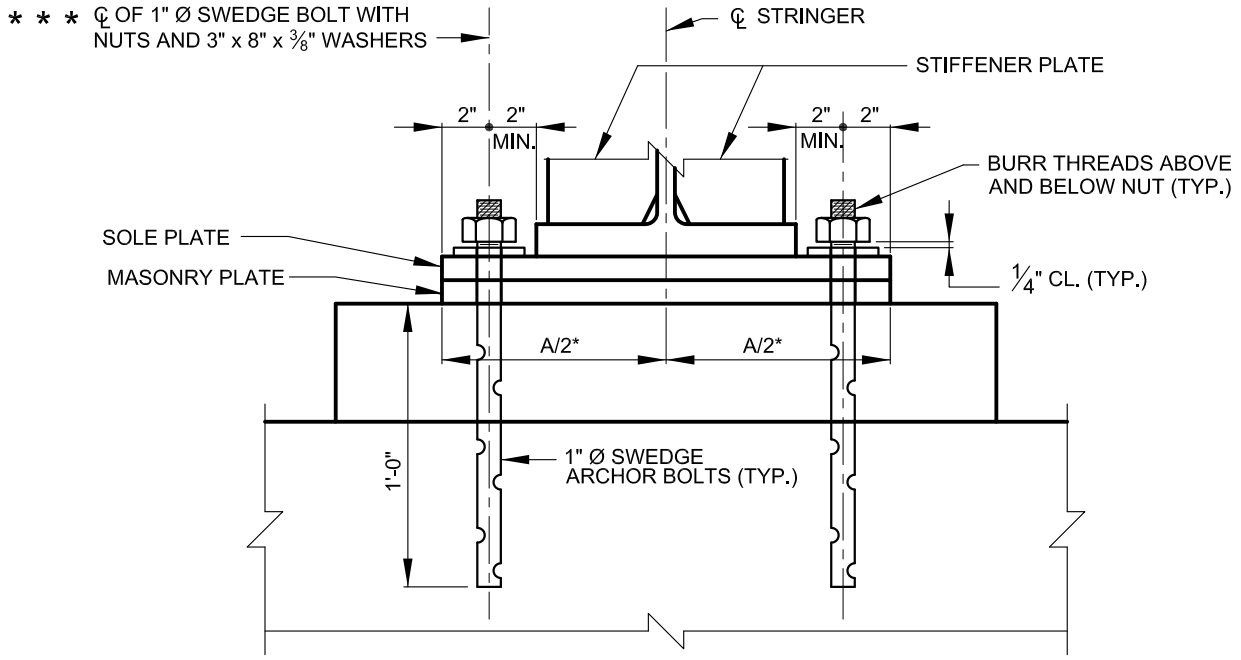

* EDGES MAY BE LEFT AS CUT OR CAST.

* * WHERE BRIDGE IS NOT SKEWED, ℄ BEARING AND ℄ SHOE ARE COINCIDENT.

* * * MINIMUM SHOWN. ENGINEER SHALL DESIGN.

ELEVATION
SCALE: NONE

VERIFIED 10-9-2007 LRFD

APPROVED:

DIVISION CHIEF, TRANSPORTATION ENGINEERING AND CONSTRUCTION

DIRECTOR, DEPARTMENT OF TRANSPORTATION

CITY OF BALTIMORE
DEPARTMENT OF TRANSPORTATION
TRANSPORTATION ENGINEERING AND CONSTRUCTION

FIXED BEARING SHORT LENGTH SPANS (GRADE 50 STEEL)

ISSUED	REVISED	REVISED
8 / 2010		

STANDARD NO.
BC 460.01-1

SCALE : NONE

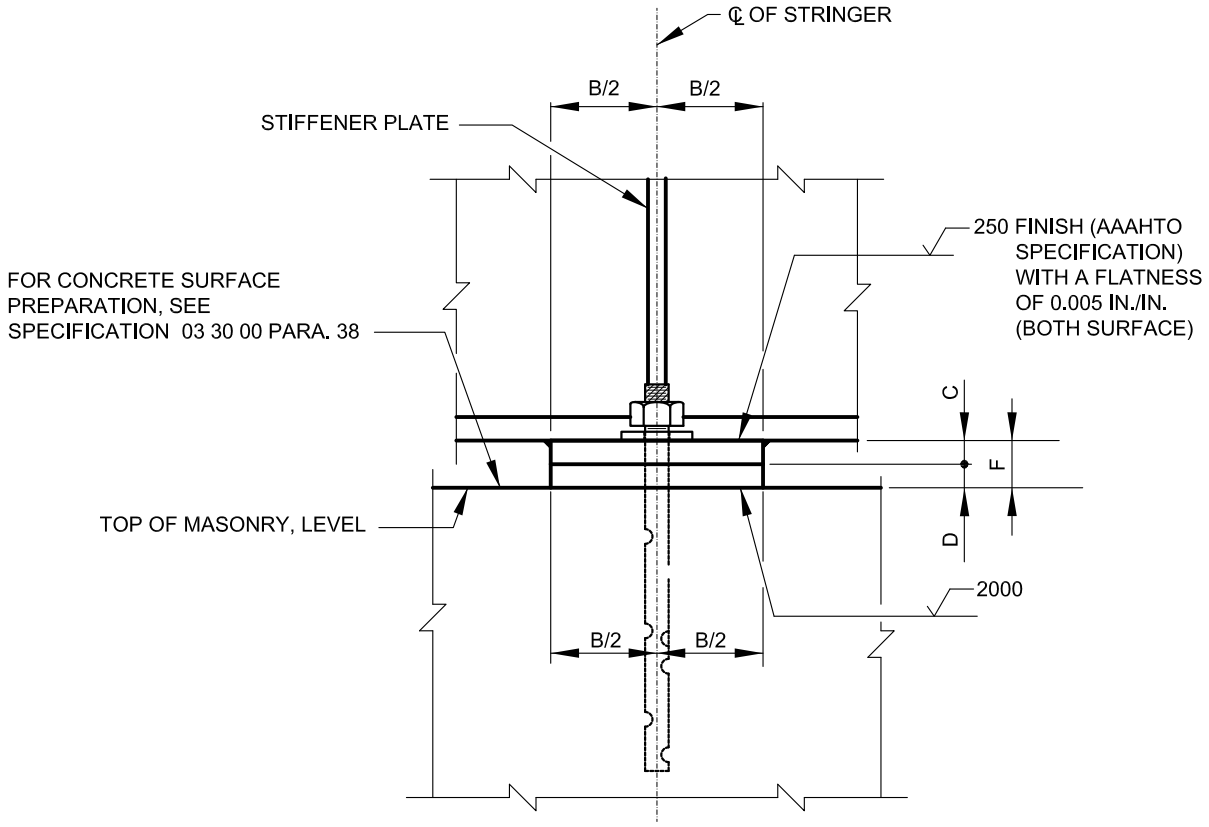

PLAN

SCALE: NONE

DATA SCHEDULE

TYPE	SOLE PLATE			MASONRY PL			HOLE LOC.	HGT.	SERVICE LOADS (KIPS)
	A	B	C	A	B	D	E	F	VERT.
SE36 - I	17	9	1	17	9	1	6½"	2	70
SE36 - II	19	9	1	19	9	1	7½"	2	85
SE36 - III	21	9	1	21	9	1	8½"	2	100

NOTE: ALL DIMENSIONS ARE IN INCHES.

NOTE:

1. SOLE AND MASONRY PLATES TO BE ASTM A 709 GRADE 50 STEEL PAINTED TO MATCH FINISHED BRIDGE COLOR.
2. FILL SLOTS AND HOLES AROUND ANCHOR BOLTS WITH NONHARDENING CAULKING COMPOUND OR ELASTIC JOINT SEALER.
3. 1000 RMS (FINISH ALL OVER) EXCEPT WHERE OTHERWISE NOTED.
4. TOP OF SOLE PLATE MUST BE BEVELED TO FIT GRADE OF BOTTOM FLANGE. IF SOLE PLATE MUST BE BEVELED, DIMENSION 'C' SHALL BE MEASURED AT ℄ OF BEARING.
5. UNLESS OTHERWISE NOTED, BEARINGS SHALL BE PLACED NORMAL TO ℄ OF STRINGER.
6. PLATES ARE TO BE SHIPPED AS UNITS.
7. IF MORE THAN ONE SIZE BEARING IS CALLED FOR, CONTRACTOR MAY FURNISH ALL BEARINGS OF LARGER SIZE PROVIDED THE BEARING PADS ARE ALTERED TO ACCOMMODATE SAME. NO INCREASE IN ANY PRICES BID WILL BE ALLOWED IF THIS OPTION IS SELECTED.
8. THIS BEARING FOR USE ON SIMPLE SPAN STEEL STRINGER BRIDGES LESS THAN 50'-0" LONG AND/OR COMPARABLE CONTINUOUS SPAN LENGTHS.
9. ALL ANCHOR BOLTS AND WASHERS SHALL BE UNPAINTED ASTM A 709 GRADE 36 GALVANIZED STEEL. ALL NUTS SHALL BE UNPAINTED ASTM A 307 GALVANIZED STEEL.

VERIFIED 10-9-2007 LRFD

APPROVED:

DIVISION CHIEF, TRANSPORTATION ENGINEERING AND CONSTRUCTION

DIRECTOR, DEPARTMENT OF TRANSPORTATION

CITY OF BALTIMORE
DEPARTMENT OF TRANSPORTATION
TRANSPORTATION ENGINEERING AND CONSTRUCTION

FIXED BEARING SHORT LENGTH SPANS (GRADE 50 STEEL)

ISSUED	REVISED	REVISED
8 / 2010		

STANDARD NO.
BC 460.01-2

SCALE : NONE

SHEET 2 OF 2

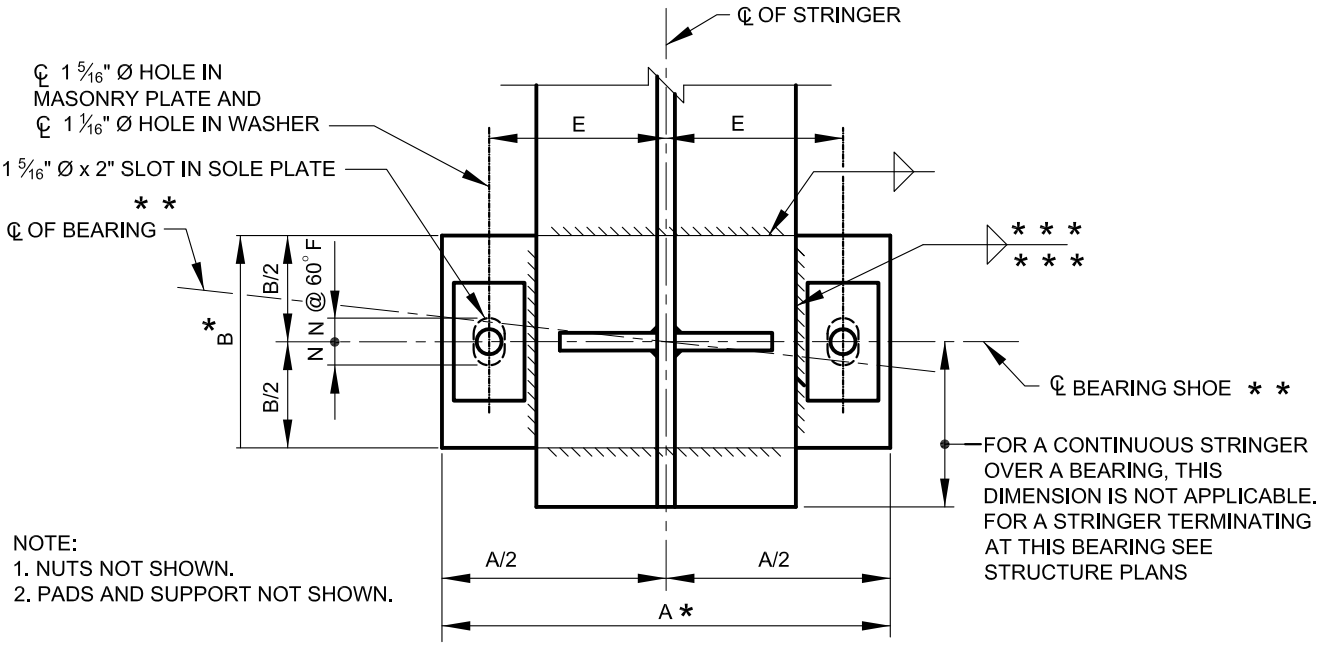

PLAN
SCALE: NONE

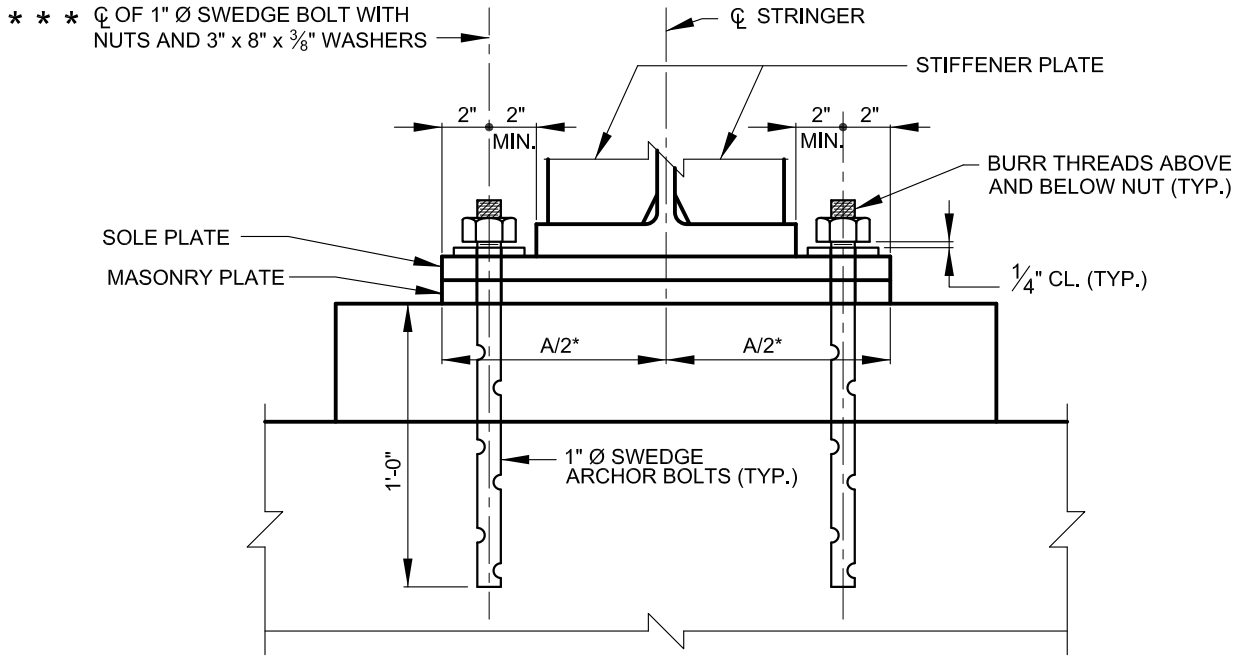

* EDGES MAY BE LEFT AS CUT OR CAST.

* * WHERE BRIDGE IS NOT SKEWED, ℄ BEARING AND ℄ SHOE ARE COINCIDENT.

* * * MINIMUM SHOWN. ENGINEER SHALL DESIGN.

ELEVATION
SCALE: NONE

VERIFIED 10-9-2007 LRFD

APPROVED:

DIVISION CHIEF, TRANSPORTATION ENGINEERING AND CONSTRUCTION

DIRECTOR, DEPARTMENT OF TRANSPORTATION

CITY OF BALTIMORE
DEPARTMENT OF TRANSPORTATION
TRANSPORTATION ENGINEERING AND CONSTRUCTION

EXPANSION BEARING SHORT LENGTH SPANS (GRADE 50 STEEL)

ISSUED	REVISED	REVISED
8 / 2010		

STANDARD NO.
BC 461.01-1

SCALE : NONE

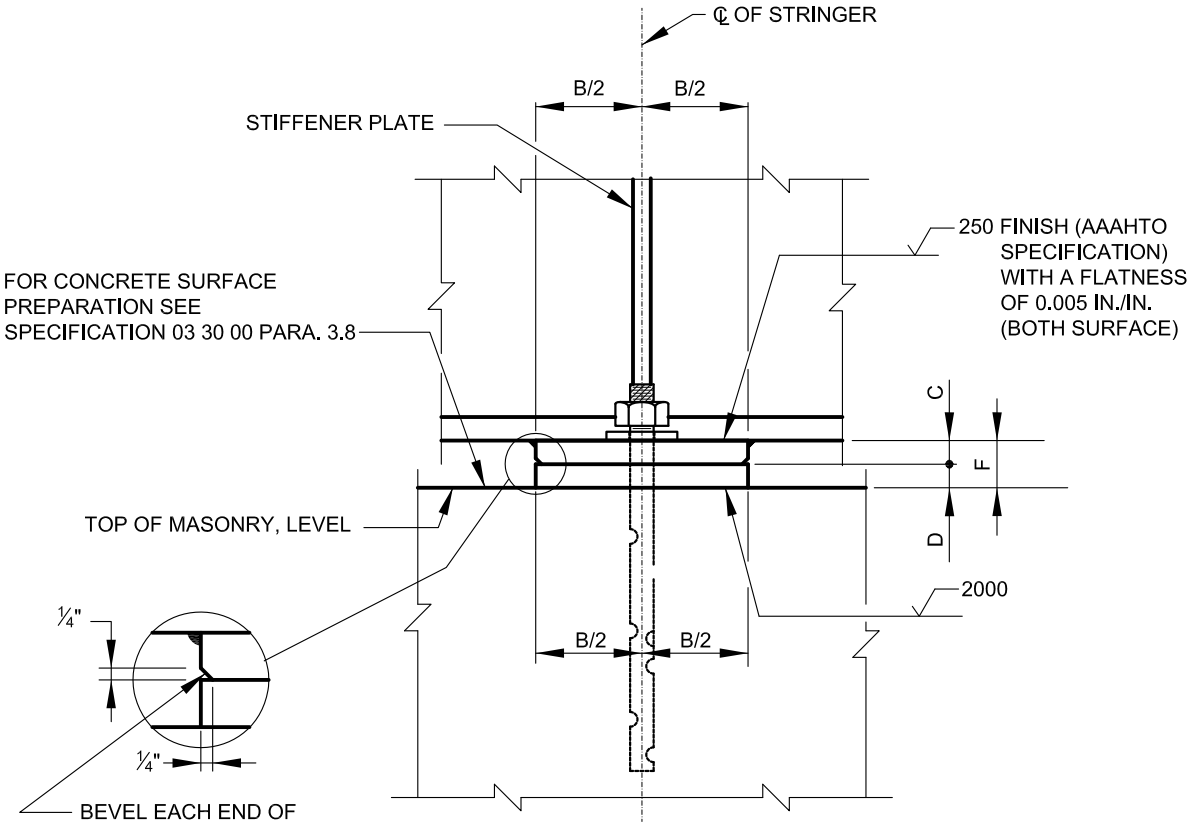

PLAN

SCALE: NONE

DATA SCHEDULE

TYPE	SOLE PLATE			MASONRY ℄			HOLE LOC.	HGT.	LOADS (KIPS)	
	A	B	C	A	B	D	E	F	VERT.	DEAD
SE36 - I	17	9	1	17	9	1	6 ½"	2	70	16
SE36 - II	19	9	1	19	9	1	7 ½"	2	85	23
SE36 - III	21	9	1	21	9	1	8 ½"	2	100	34

NOTE: ALL DIMENSIONS ARE IN INCHES.

NOTE:

1. SOLE AND MASONRY PLATES TO BE ASTM A 709 GRADE 50 STEEL PAINTED TO MATCH FINISHED BRIDGE COLOR.
2. FILL SLOTS AND HOLES AROUND ANCHOR BOLTS WITH NONHARDENING CAULKING COMPOUND OR ELASTIC JOINT SEALER.
3. 1000 RMS (FINISH ALL OVER) EXCEPT WHERE OTHERWISE NOTED.
4. DESIGN BEARING LOAD 0.7 KSI.
5. TOP OF SOLE PLATE MUST BE BEVELED TO FIT GRADE OF BOTTOM FLANGE. IF SOLE PLATE MUST BE BEVELED, DIMENSION 'C' SHALL BE MEASURED AT ℄ OF BEARING.
6. UNLESS OTHERWISE NOTED, BEARINGS SHALL BE PLACED NORMAL TO ℄ OF STRINGER.
7. PLATES ARE TO BE SHIPPED AS UNITS.
8. IF MORE THAN ONE SIZE BEARING IS CALLED FOR, CONTRACTOR MAY FURNISH ALL BEARINGS OF LARGER SIZE PROVIDED THE BEARING PADS ARE ALTERED TO ACCOMMODATE SAME. NO INCREASE IN ANY PRICES BID WILL BE ALLOWED IF THIS OPTION IS SELECTED.
9. THIS BEARING FOR USE ON SIMPLE SPAN STEEL STRINGER BRIDGES LESS THAN 50'-0" LONG AND/OR COMPARABLE CONTINUOUS SPAN LENGTHS.
10. ALL ANCHOR BOLTS AND WASHERS SHALL BE UNPAINTED ASTM A 709 GRADE 36 GALVANIZED STEEL. ALL NUTS SHALL BE UNPAINTED ASTM A 307 GALVANIZED STEEL.

APPROVED:

DIVISION CHIEF, TRANSPORTATION ENGINEERING AND CONSTRUCTION

DIRECTOR, DEPARTMENT OF TRANSPORTATION

CITY OF BALTIMORE
DEPARTMENT OF TRANSPORTATION
TRANSPORTATION ENGINEERING AND CONSTRUCTION

ISSUED	REVISED	REVISED
8 / 2010		

EXPANSION BEARING SHORT LENGTH SPANS (GRADE 50 STEEL)

STANDARD NO.
BC 461.01-2

SCALE : NONE

SHEET 2 OF 2

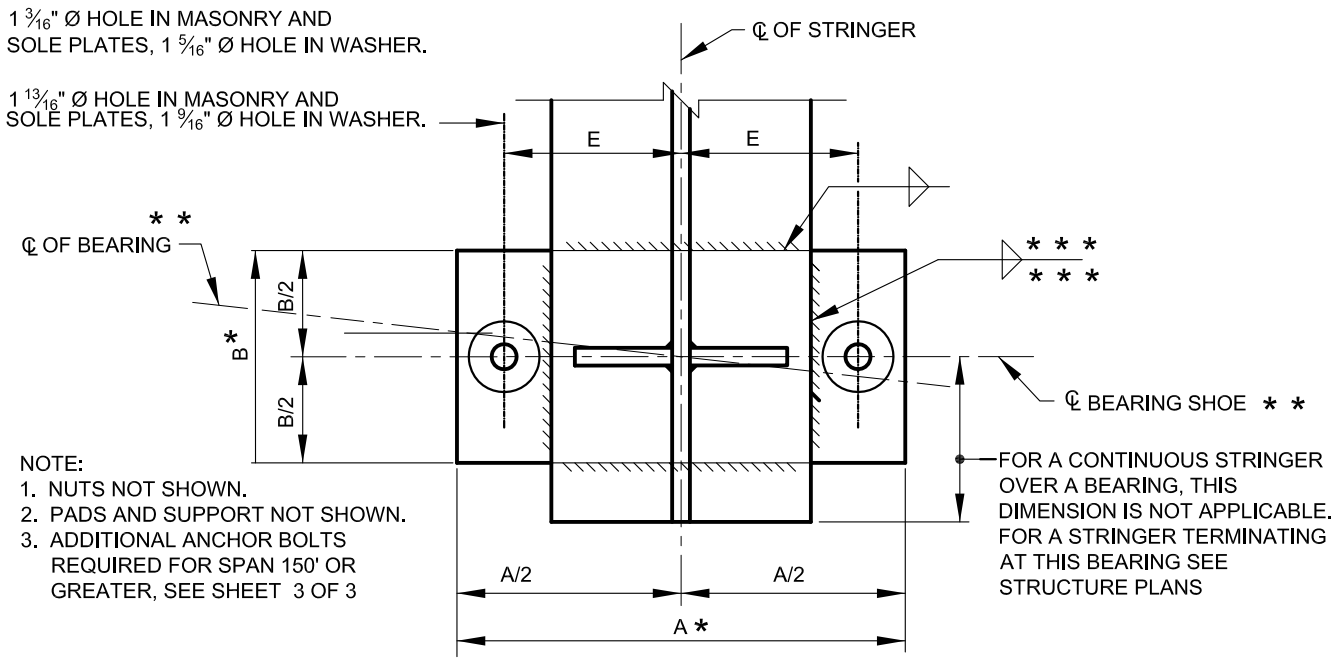

NOTE:
1. NUTS NOT SHOWN.
2. PADS AND SUPPORT NOT SHOWN.
3. ADDITIONAL ANCHOR BOLTS REQUIRED FOR SPAN 150' OR GREATER, SEE SHEET 3 OF 3

PLAN
SCALE: NONE

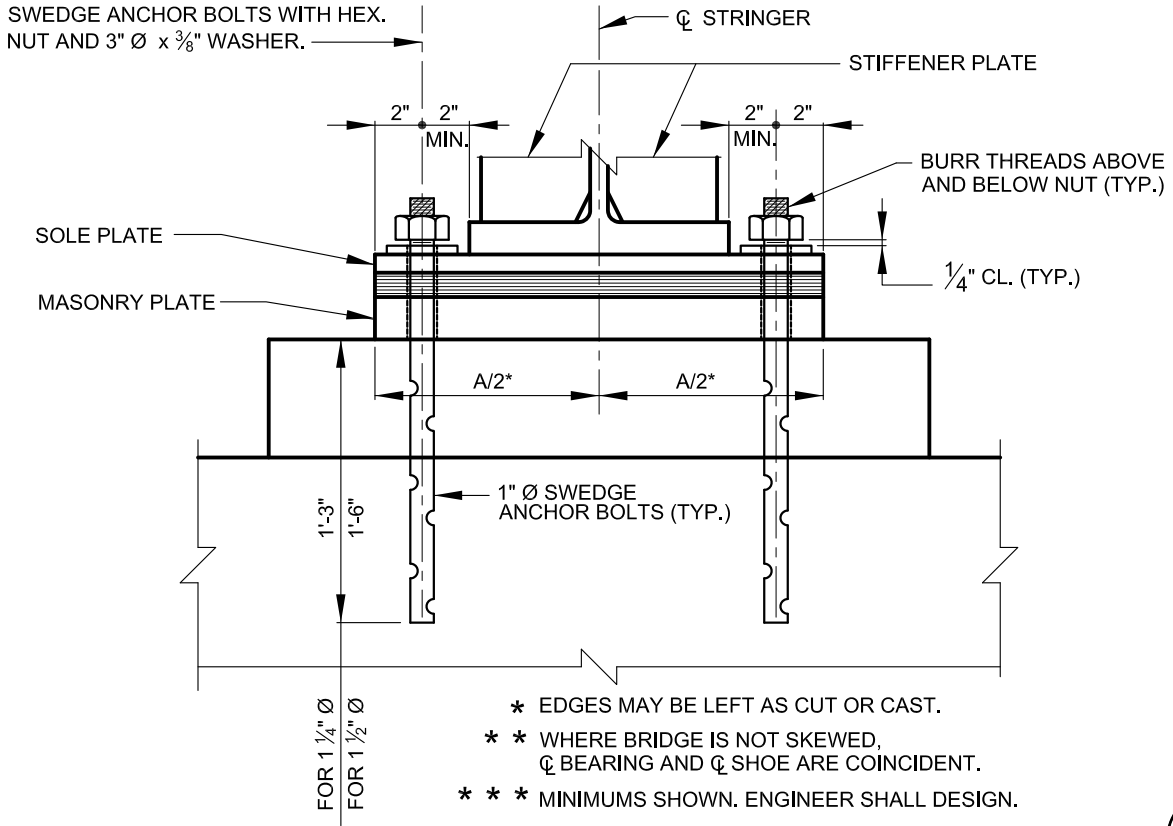

* EDGES MAY BE LEFT AS CUT OR CAST.

* * WHERE BRIDGE IS NOT SKEWED, ℄ BEARING AND ℄ SHOE ARE COINCIDENT.

* * * MINIMUMS SHOWN. ENGINEER SHALL DESIGN.

ELEVATION
SCALE: NONE

VERIFIED 10-9-2007 LRFD

APPROVED:

DIVISION CHIEF, TRANSPORTATION ENGINEERING AND CONSTRUCTION

DIRECTOR, DEPARTMENT OF TRANSPORTATION

CITY OF BALTIMORE
DEPARTMENT OF TRANSPORTATION
TRANSPORTATION ENGINEERING AND CONSTRUCTION

FIXED BEARING MEDIUM LENGTH SPANS (GRADE 50 STEEL)

ISSUED	REVISED	REVISED
8 / 2010		

STANDARD NO.
BC 462.01-1

SCALE : NONE

SHEET 1 OF 3

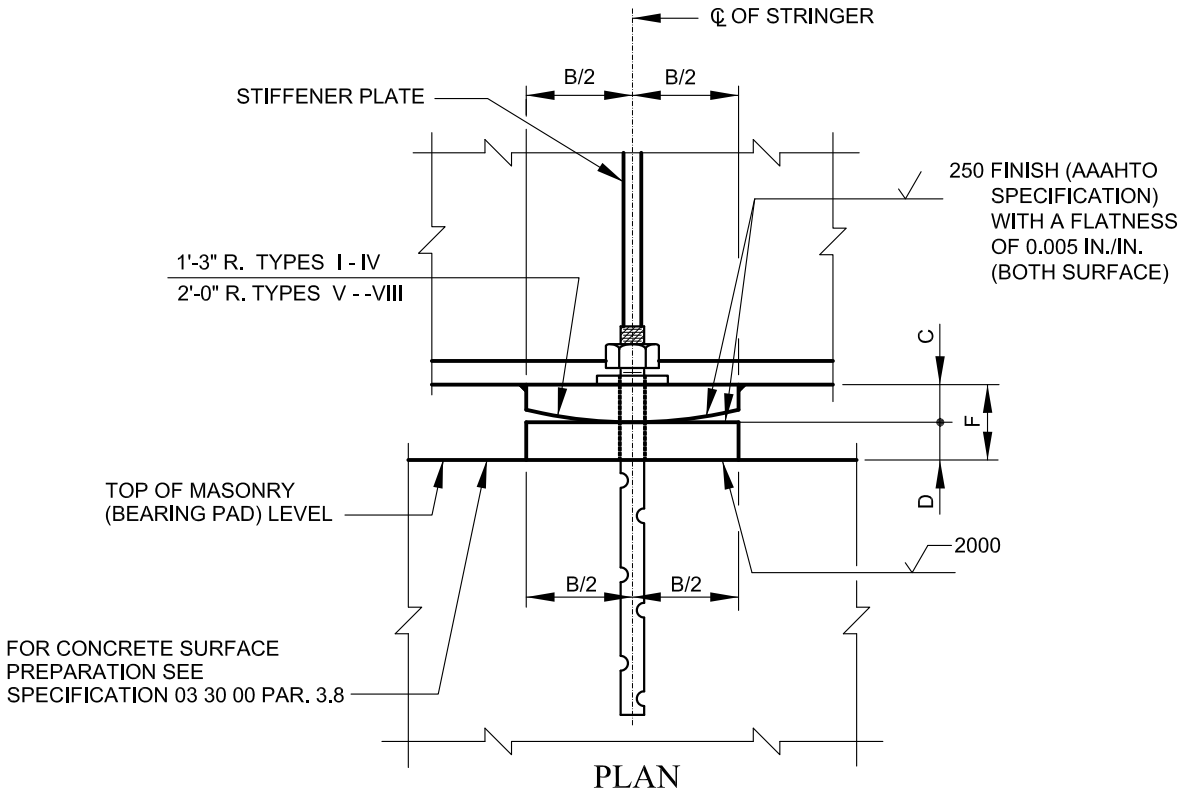

PLAN

SCALE: NONE

DATA SCHEDULE

TYPE	SOLE PLATE			MASONRY ℄ HOLE LOC.				HGT.	LOADS (KIPS)	
	A	B	C	A	B	D	E	F	VERT.	DEAD
MF 50-I	20	9	1 ¾	20	9	1 ¾	8	3 ½	175	85
MF 50-II	22	II	1 ⅞	22	II	1 ⅞	9	3 ¾	240	120
MF 50-III	24	12	2	24	12	2	10	4	285	140
MF 50-IV	26	13	2 ¼	26	13	2 ¼	II	4 ½	335	165
MF 50-V	30	15	2 ½	30	15	2 ½	12	5	445	220
MF 50-VI	32	16	2 ¾	32	16	2 ¾	13	5 ½	510	255
MF 50-VII	34	18	2 ⅞	34	18	2 ⅞	15	5 ¾	610	305
MF 50-VIII	36	20	3	36	20	3	16	6	715	355

NOTE: ALL DIMENSIONS ARE IN INCHES.

NOTE:

1. SOLE AND MASONRY PLATES TO BE ASTM A 709 GRADE 50 STEEL PAINTED TO MATCH FINISHED BRIDGE COLOR, CONVEX PLATE SHALL BE A SELF LUBRICATING BRONZE BEARING PLATE CONFORMING TO SPECIFICATION 03 15 15.
2. FILL SLOTS AND HOLES AROUND ANCHOR BOLTS WITH NONHARDENING CAULKING COMPOUND OR ELASTIC JOINT SEALER.
3. 1000 RMS (FINISH ALL OVER) EXCEPT WHERE OTHERWISE NOTED.
4. ROTATION ½° ± MAXIMUM.
5. DESIGN MASONRY BEARING LOAD 1.0 KSI.
6. TOP OF SOLE PLATE MUST BE BEVELED TO FIT GRADE OF BOTTOM FLANGE.
7. UNLESS OTHERWISE NOTED, BEARINGS SHALL BE PLACED NORMAL TO ℄ OF STRINGER.
8. PLATES ARE TO BE SHIPPED AS UNITS.
9. IF MORE THAN ONE SIZE BEARING IS CALLED FOR, CONTRACTOR MAY FURNISH ALL BEARINGS OF LARGER SIZE PROVIDED THE BEARING PADS ARE ALTERED TO ACCOMMODATE SAME. NO INCREASE IN ANY PRICES BID WILL BE ALLOWED IF THIS OPTION IS SELECTED.
10. ALL ANCHOR BOLTS AND WASHERS SHALL BE UNPAINTED ASTM A 709 GRADE 36 GALVANIZED STEEL. ALL NUTS SHALL BE UNPAINTED ASTM A 307 GALVANIZED STEEL.
11. MEDIUM SPAN RANGE IS CONSIDERED 50' TO 150' SIMPLE SPAN LENGTHS AND COMPARABLE SPAN CONTINUOUS UNITS.

VERIFIED 10-9-2007 LRFD

CITY OF BALTIMORE 1797

APPROVED:

DIVISION CHIEF, TRANSPORTATION ENGINEERING AND CONSTRUCTION

DIRECTOR, DEPARTMENT OF TRANSPORTATION

CITY OF BALTIMORE
DEPARTMENT OF TRANSPORTATION
TRANSPORTATION ENGINEERING AND CONSTRUCTION

ISSUED	REVISED	REVISED
8 / 2010		

FIXED BEARING MEDIUM LENGTH SPANS (GRADE 50 STEEL)

STANDARD NO. BC 462.01-2

SCALE : NONE

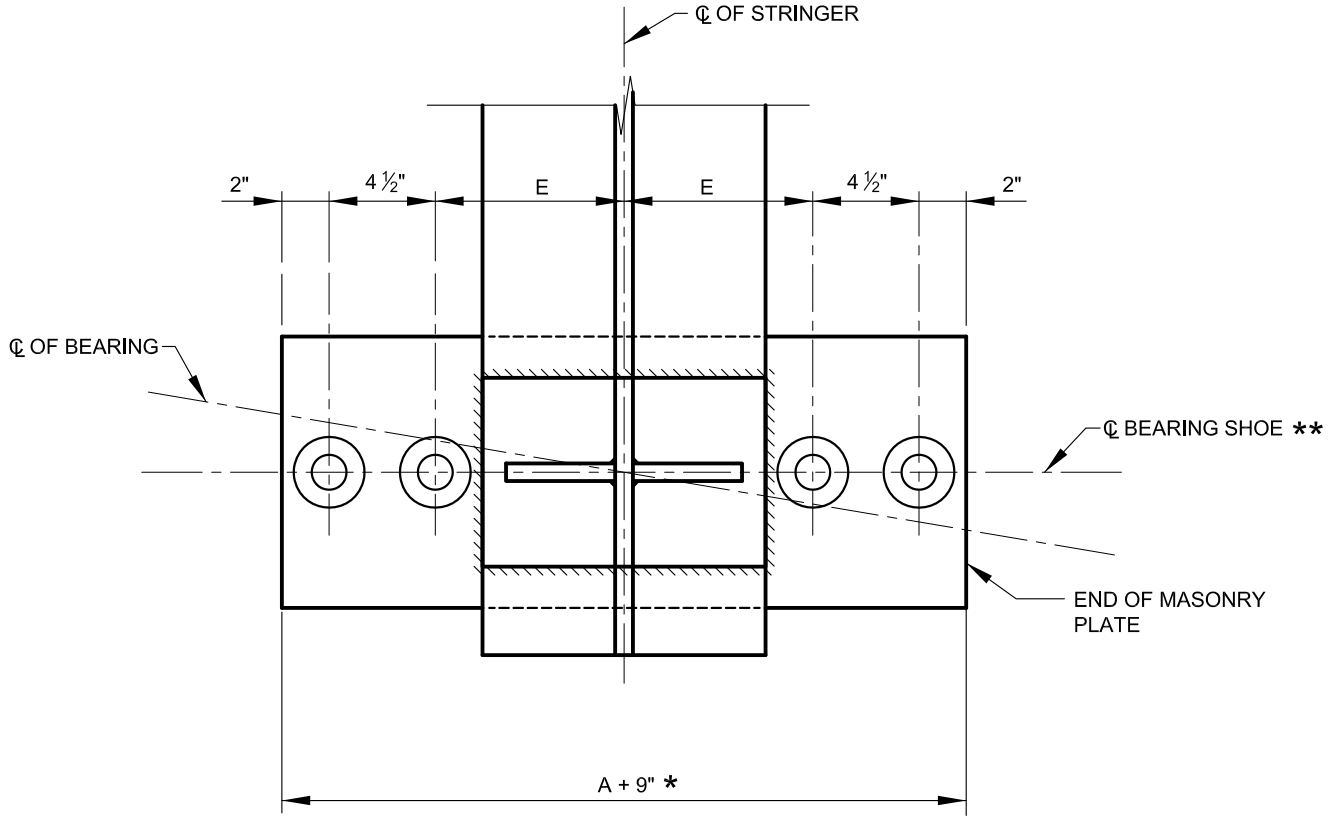

NOTE:
1. NUTS NOT SHOWN.
2. PADS AND SUPPORT NOT SHOWN.

PLAN
FOR ALL GIRDERS WITH SPAN LENGTHS 150' OR GREATER

SCALE: NONE

NOTE:
1. BEARINGS FOR GIRDERS GREATER THAN 150' SHALL BE EXTENDED TO ACCOMMODATE 2 ADDITIONAL BOLTS. SIZE AND DETAILS OF ALL 4 ANCHOR BOLTS TO BE THE SAME AS THAT REQUIRED FOR 2 BOLT BEARINGS.

2. FOR LONG SPAN BRIDGES (150' OR GREATER) BEARINGS WILL HAVE TO BE SPECIALLY DESIGNED.

* EDGE MAY BE LEFT AS CUT OR CAST.

** WHERE BRIDGE IS NOT SKEWED. $\mathcal{C}_L$ BEARING AND $\mathcal{C}_L$ SHOE ARE COINCIDENT.

VERIFIED 10-9-2007 LRFD

APPROVED:

DIVISION CHIEF, TRANSPORTATION ENGINEERING AND CONSTRUCTION

DIRECTOR, DEPARTMENT OF TRANSPORTATION

CITY OF BALTIMORE
DEPARTMENT OF TRANSPORTATION
TRANSPORTATION ENGINEERING AND CONSTRUCTION

FIXED BEARING MEDIUM LENGTH SPANS (GRADE 50 STEEL)

ISSUED	REVISED	REVISED
8 / 2010		

STANDARD NO.
BC 462.01-3

SCALE : NONE | SHEET 3 OF 3

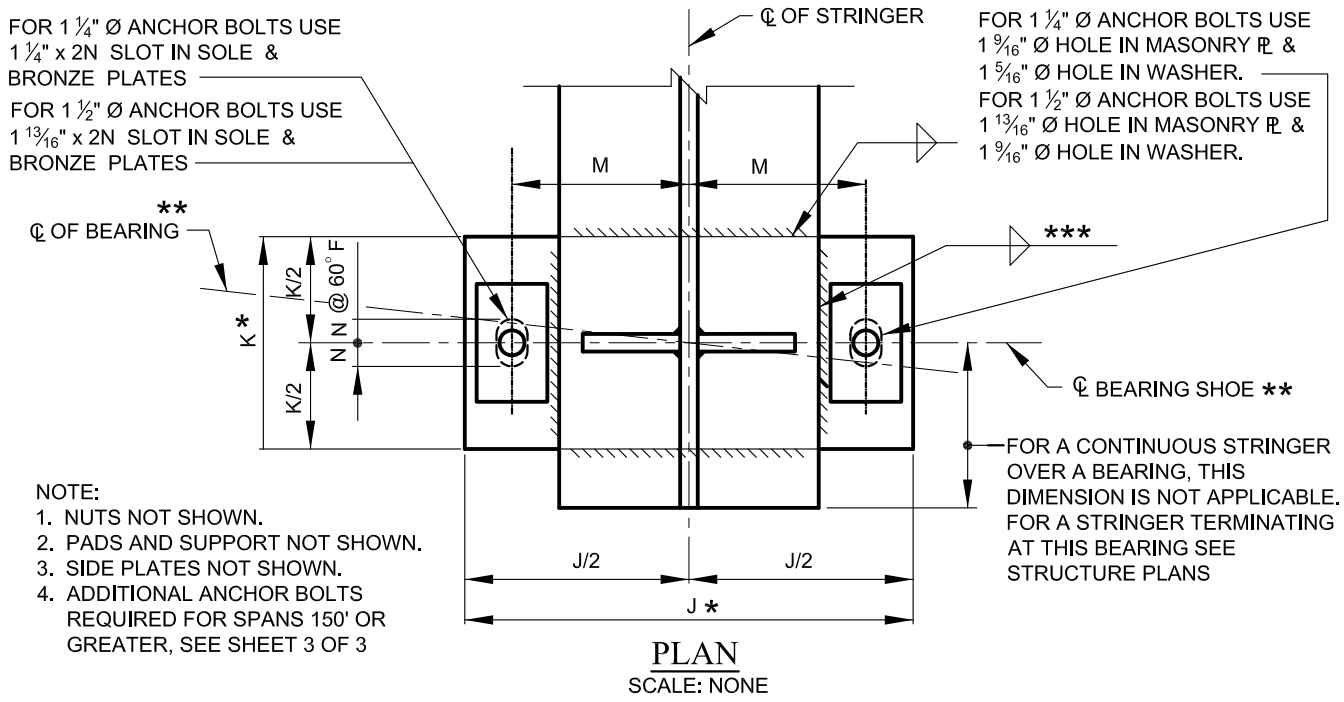

NOTE:
1. NUTS NOT SHOWN.
2. PADS AND SUPPORT NOT SHOWN.
3. SIDE PLATES NOT SHOWN.
4. ADDITIONAL ANCHOR BOLTS REQUIRED FOR SPANS 150' OR GREATER, SEE SHEET 3 OF 3

PLAN
SCALE: NONE

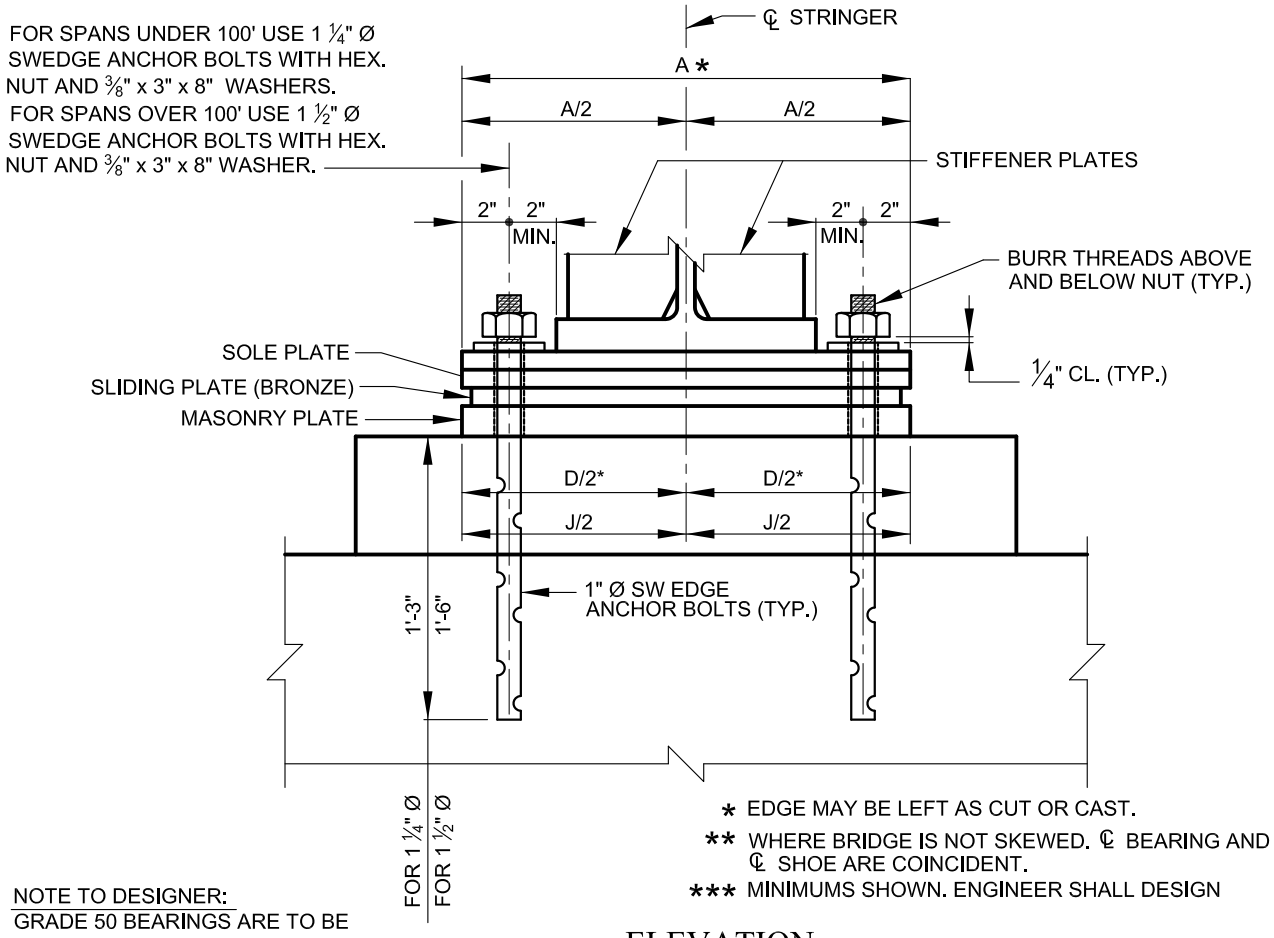

* EDGE MAY BE LEFT AS CUT OR CAST.

** WHERE BRIDGE IS NOT SKEWED. ℄ BEARING AND ℄ SHOE ARE COINCIDENT.

*** MINIMUMS SHOWN. ENGINEER SHALL DESIGN

NOTE TO DESIGNER:
GRADE 50 BEARINGS ARE TO BE USED IN NEW BRIDGE PROJECTS.

ELEVATION
SCALE: NONE

APPROVED:

DIVISION CHIEF, TRANSPORTATION ENGINEERING AND CONSTRUCTION

DIRECTOR, DEPARTMENT OF TRANSPORTATION

CITY OF BALTIMORE
DEPARTMENT OF TRANSPORTATION
TRANSPORTATION ENGINEERING AND CONSTRUCTION

ISSUED	REVISED	REVISED
8 / 2010		

BRONZE EXPANSION BEARING MEDIUM LENGTH SPANS (GRADE 50 STEEL)

STANDARD NO.
BC 463.01-1

SCALE : NONE | SHEET 1 OF 3

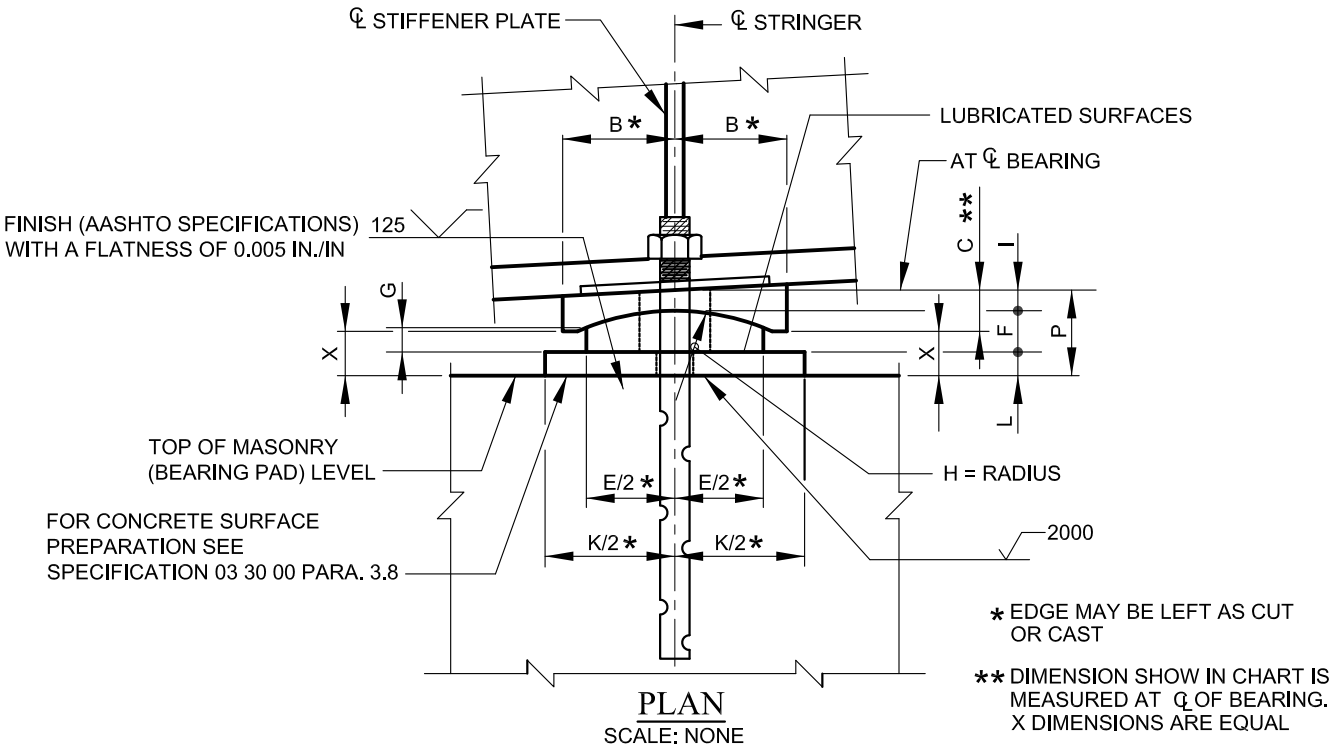

PLAN

SCALE: NONE

DATA SCHEDULE

TYPE	SOLE PLATE			SLIDING PLATE				RADIUS	MASONRY PL			HOLE LOC.		HGT.	LOADS (KIPS)			TOTAL EXPANSION ± (0° F - 120°)
	A	B	C	D	E	F	G	H	J	K	L	M	N	P	VERT.	HORIZ.	DEAD	
ME36 - I	21	9 ½	1 ¾	20	7 ½	1 ¾	1 ±	11	21	11	1	8 ½	1 ½	3 ¾	145	10	70	1 ½
ME36 - II	23	10 ½	1 ⅞	22	8 ½	1 ¾	1 ±	12	23	12	1	9 ½	1 ½	3 ¾	185	15	90	1 ½
ME36 - III	25	11 ½	2	24	9 ½	1 ¾	1 ±	15	25	13	1	10 ½	1 ½	3 ¾	225	20	110	1 ½
ME36 - IV	26	14 ½	2 ⅛	25	12 ½	2	1 ±	18	26	16	1	11	2	4	310	30	155	2 ½
ME36 - V	29	15 ½	2 ⅜	28	13 ½	2 ¼	1 ±	18	29	17	1 ½	12 ½	2	4 ¾	375	35	185	2 ½
ME36 - VI	30	16 ½	2 ½	29	14 ½	2 ⅜	1 ±	19	30	20	1 ½	13	2 ½	4 ⅞	420	40	210	3 ½
ME36 - VII	31	18 ½	2 ½	30	15 ½	2 ⅜	1 ±	22	31	23	2	13 ½	3	5 ⅜	460	45	230	4 ½
ME36 - VIII	32	19 ½	2 ⅝	31	16 ½	2 ½	1 ±	23	32	24	2 ½	14	3 ½	6	510	50	255	5 ½

NOTE: ALL DIMENSIONS ARE IN INCHES.

NOTE:

1. SOLE AND MASONRY PLATES TO BE ASTM A 709 GRADE 50 STEEL PAINTED TO MATCH FINISHED BRIDGE COLOR, CONVEX PLATE SHALL BE A SELF LUBRICATING BRONZE BEARING PLATE CONFORMING TO SPECIFICATION 03 15 15.
2. FILL SLOTS AND HOLES AROUND ANCHOR BOLTS WITH NONHARDENING CAULKING COMPOUND OR ELASTIC JOINT SEALER.
3. 1000 RMS (FINISH ALL OVER) EXCEPT WHERE OTHERWISE NOTED.
4. ROTATION ½° ± MAXIMUM.
5. DESIGN MASONRY BEARING LOAD 1.0 KSI.
6. TOP OF SOLE PLATE MUST BE BEVELED TO FIT GRADE OF BOTTOM FLANGE.
7. UNLESS OTHERWISE NOTED, BEARINGS SHALL BE PLACED NORMAL TO ℄ OF STRINGER.
8. PLATES ARE TO BE SHIPPED AS UNITS.
9. IF MORE THAN ONE SIZE BEARING IS CALLED FOR, CONTRACTOR MAY FURNISH ALL BEARINGS OF LARGER SIZE PROVIDED THE BEARING PADS ARE ALTERED TO ACCOMMODATE SAME. NO INCREASE IN ANY PRICES BID WILL BE ALLOWED IF THIS OPTION IS SELECTED.
10. ALL ANCHOR BOLTS AND WASHERS SHALL BE UNPAINTED ASTM A 709 GRADE 36 GALVANIZED STEEL. ALL NUTS SHALL BE UNPAINTED ASTM A 307 GALVANIZED STEEL.
11. MEDIUM SPAN RANGE IS CONSIDERED 50' TO 150' SIMPLE SPAN LENGTHS AND COMPARABLE SPAN CONTINUOUS UNITS.

APPROVED:

DIVISION CHIEF, TRANSPORTATION ENGINEERING AND CONSTRUCTION

DIRECTOR, DEPARTMENT OF TRANSPORTATION

CITY OF BALTIMORE
DEPARTMENT OF TRANSPORTATION
TRANSPORTATION ENGINEERING AND CONSTRUCTION

ISSUED	REVISED	REVISED
8 / 2010		

BRONZE EXPANSION BEARING
MEDIUM LENGTH SPANS
(GRADE 50 STEEL)

STANDARD NO.
BC 463.01-2

SCALE : NONE

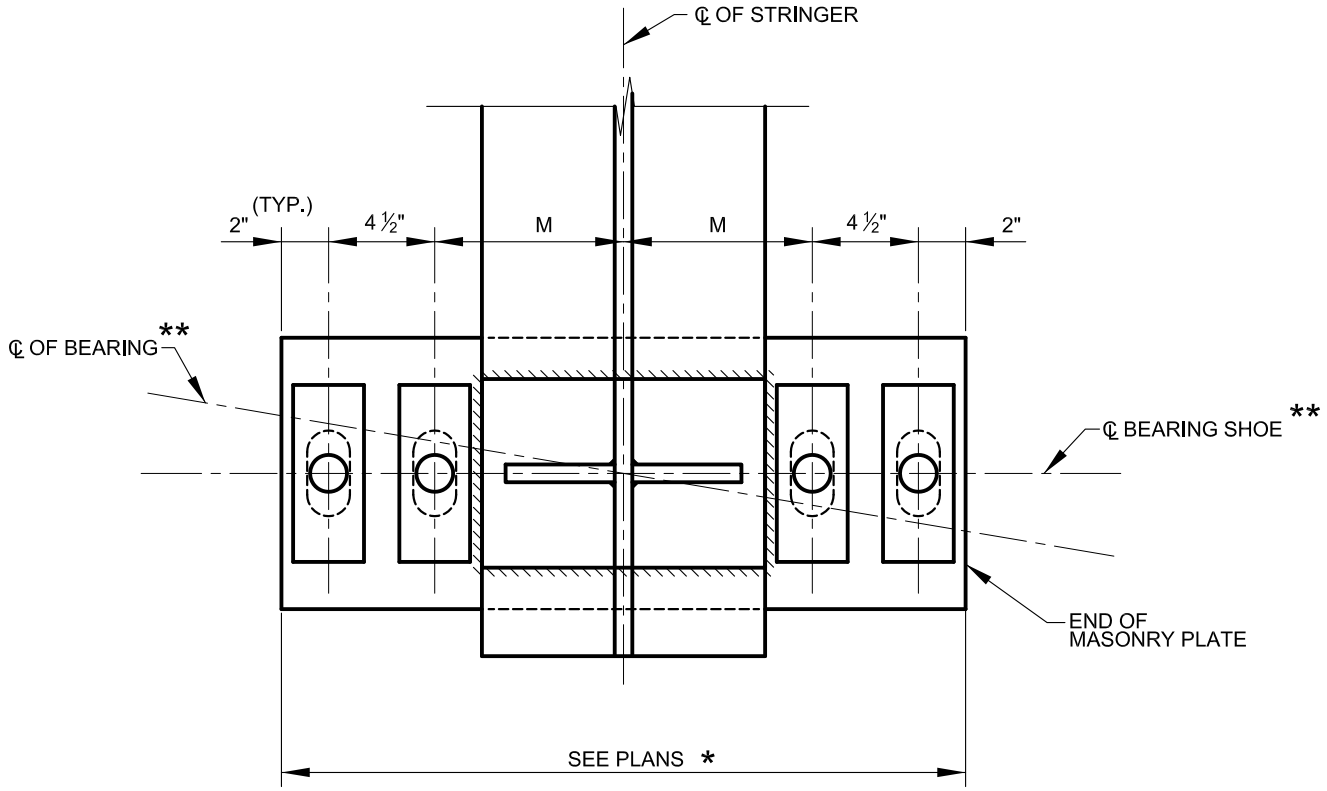

NOTE:
1. NUTS NOT SHOWN.
2. PADS AND SUPPORT NOT SHOWN.
3. SIDE PLATES NOT SHOWN.

PLAN
FOR ALL GIRDERS WITH SPAN LENGTHS 150' OR GREATER

SCALE: NONE

NOTE:
1. TO ACCOMMODATE AASHTO REQUIREMENTS, BEARINGS FOR GIRDERS 150' OR GREATER SHALL BE EXTENDED TO ACCOMMODATE 2 ADDITIONAL BOLTS. SIZE AND DETAILS OF ALL 4 ANCHOR BOLTS TO BE THE SAME AS THAT REQUIRED FOR 2 BOLT BEARINGS.
2. FOR LONG SPAN BRIDGES (150' OR GREATER), BEARINGS WILL HAVE TO BE SPECIALLY DESIGNED

* EDGES MAY BE LEFT AS CUT OR CAST.

** WHERE BRIDGE IS NOT SKEWED. ℄ BRG. AND ℄ SHOE ARE COINCIDENT

APPROVED:

DIVISION CHIEF, TRANSPORTATION ENGINEERING AND CONSTRUCTION

DIRECTOR, DEPARTMENT OF TRANSPORTATION

CITY OF BALTIMORE
DEPARTMENT OF TRANSPORTATION
TRANSPORTATION ENGINEERING AND CONSTRUCTION

BRONZE EXPANSION BEARING
MEDIUM LENGTH SPANS
(GRADE 50 STEEL)

ISSUED	REVISED	REVISED
8 / 2010		

STANDARD NO.
BC 463.01-3

SCALE : NONE | SHEET 3 OF 3

NOTE: PLACE VERTICAL JOINT AT CENTER OF EVERY RAIL PANEL. JOINTS SHALL BE FORMED BY POURING ALTERNATE SECTIONS. THE POUR OF ADJACENT SECTIONS SHALL HAVE A TWO (2) DAY DELAY BETWEEN POURS. IN ORDER TO FORM A WATER TIGHT JOINT, A PARAFFIN COATING SHALL BE APPLIED AT EVERY JOINT. NO REINFORCING STEEL SHALL PASS THROUGH JOINT. JOINT SPACING, TREATMENT, ETC. APPLIES TO MEDIAN BARRIER ALSO.

NOTE: ALL LONGITUDINAL BARS ARE #5 BARS SPACED AS SHOWN (PARAPET AND MEDIAN BARRIERS)

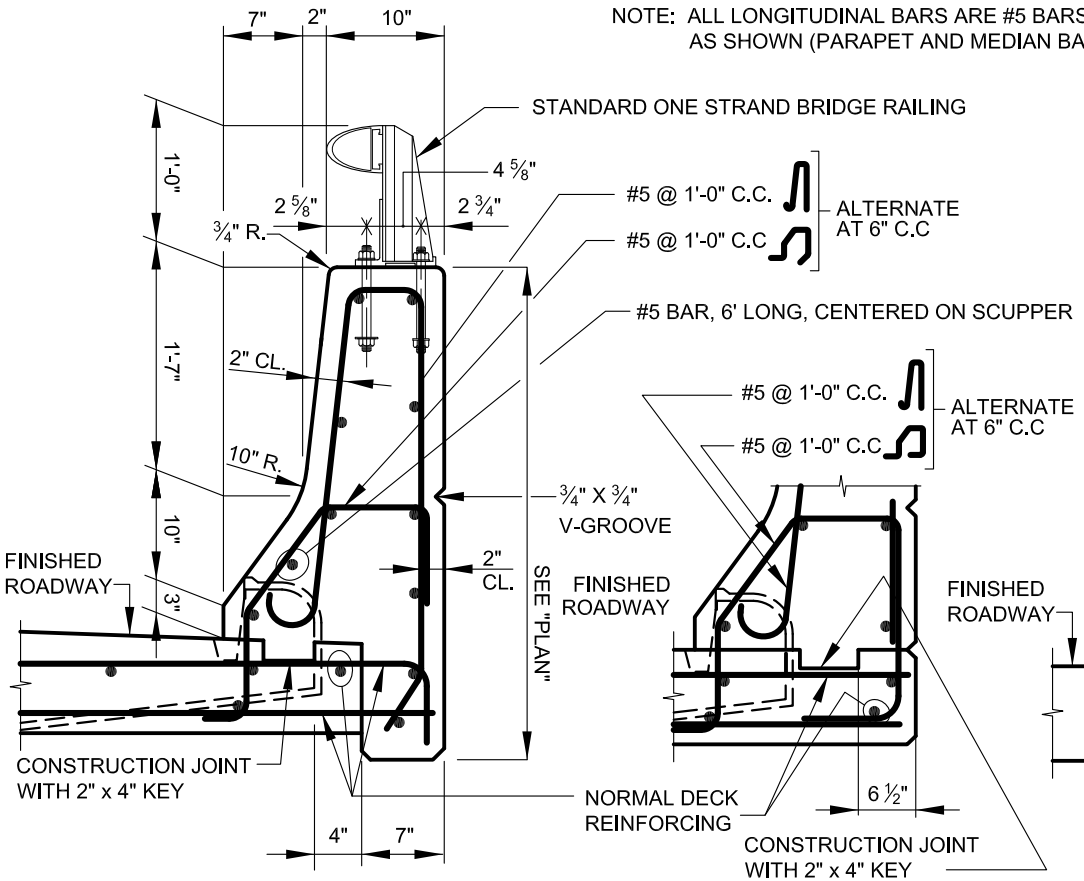

FOR DETAILS NOT SHOWN SEE SECTION "FOR BRIDGES OVER HIGHWAYS"

NOTE: IF SCUPPERS ARE USED IN THIS BARRIER, EACH SCUPPER SHALL BE SET INTO BARRIER AS SHOWN. CHAMFER FROM BARRIER FACES OF CONCRETE TO FACE OF SCUPPER AS REQUIRED

FOR BRIDGES OVER HIGHWAY

TYPICAL CROSS SECTIONS - BRIDGE PARAPET

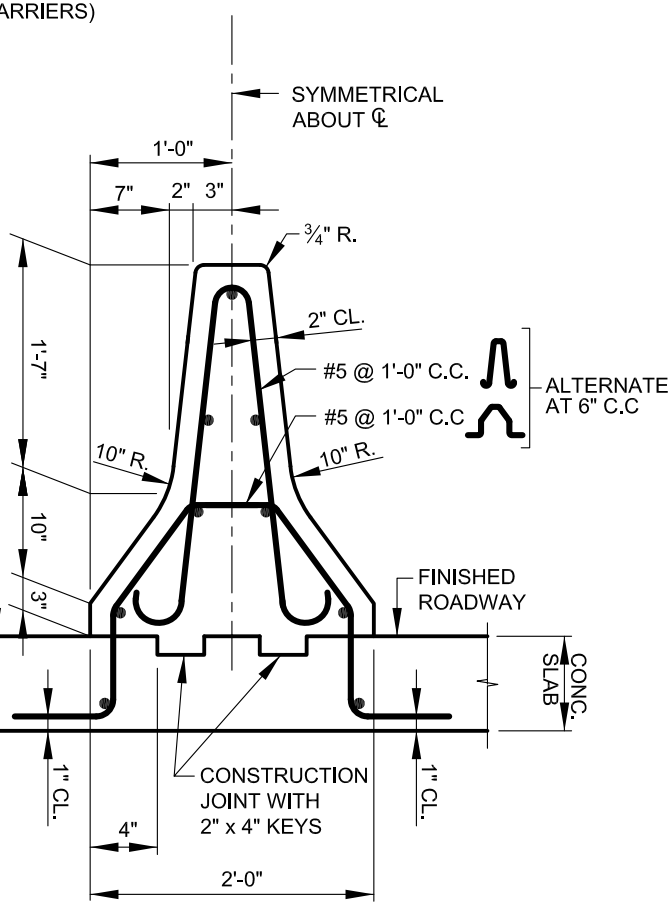

NORMAL DECK REINFORCING NOT SHOWN

FOR BRIDGES OVER STREAMS & RAILROAD

TYPICAL CROSS SECTIONS BRIDGE MEDIAN BARRIER

APPROVED:

DIVISION CHIEF, TRANSPORTATION ENGINEERING AND CONSTRUCTION

DIRECTOR, DEPARTMENT OF TRANSPORTATION

CITY OF BALTIMORE
DEPARTMENT OF TRANSPORTATION
TRANSPORTATION ENGINEERING AND CONSTRUCTION

CONCRETE BARRIER BRIDGE PARAPET AND MEDIAN

ISSUED	REVISED	REVISED
8 / 2010		

STANDARD NO. BC 470.01

SCALE : NONE

SHEET 1 OF 1

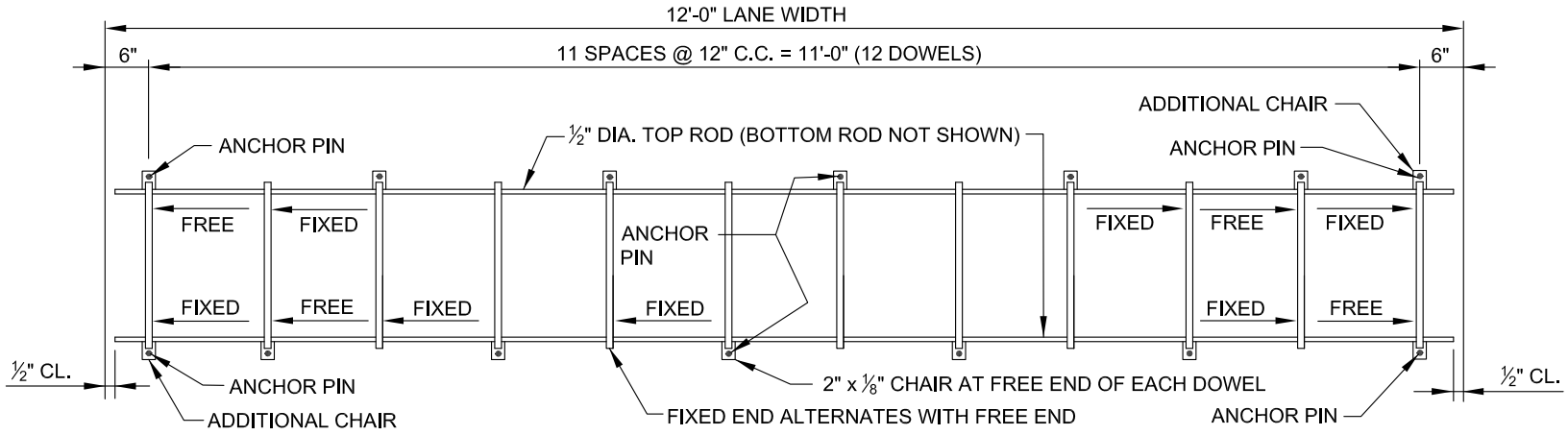

PLAN OF CONTRACTION JOINT

NOTE:
ALL CHAIRS TO HAVE 1/2" DIA. HOLE (TYPICAL)
USE 6 ANCHOR PINS AS SHOWN. IF NECESSARY
PLACE PIN IN ADJACENT HOLE. ANCHOR PINS
TO BE A MIN. 5/16" DIA. BARS 12" LONG AND
POINTED ON ONE END. THE SHORT END WILL
BE A MIN. OF 2" IN LENGTH.

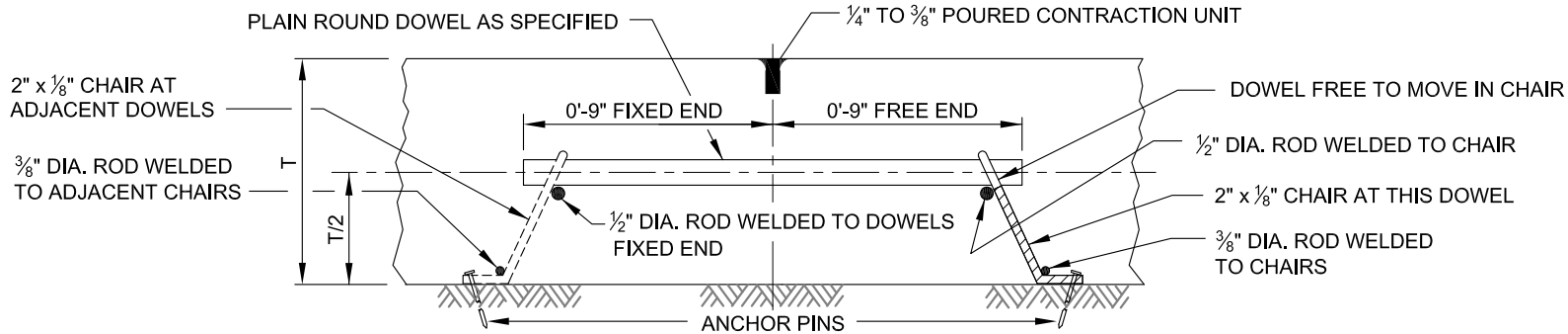

SECTION THRU CONTRACTION JOINT

NOTE:
THE DIAMETER OF ALL DOWELS SHALL BE AS SHOWN ON
BC 572.21. FREE END OF DOWELS SHALL BE COATED
AFTER INSTALLATION WITH GRAPHITE GREASE.

APPROVED:
DIVISION CHIEF, TRANSPORTATION ENGINEERING AND CONSTRUCTION
DIRECTOR, DEPARTMENT OF TRANSPORTATION

CITY OF BALTIMORE
DEPARTMENT OF TRANSPORTATION
TRANSPORTATION ENGINEERING AND CONSTRUCTION

LOAD TRANSFER ASSEMBLY
CONTRACTION JOINTS

STANDARD NO.
BC 572.25

ISSUED	REVISED	REVISED
8 / 2010		

SCALE : NONE

SHEET 1 OF 1

NOTE: WHERE DRIVEWAY IS TO BE CONSTRUCTED THROUGH AN EXISTING CURB, REMOVE EXISTING CURB OR CURB & GUTTER FOR ITS FULL DEPTH AND TO THE WIDTH INDICATED AND CONSTRUCT DEPRESSED CURB SECTION AS SHOWN.

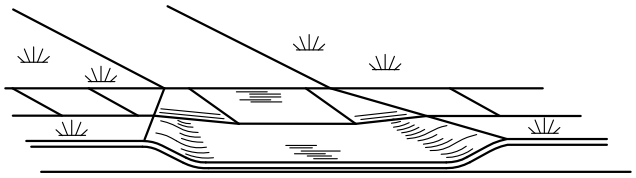

DRIVEWAY ENTRANCE

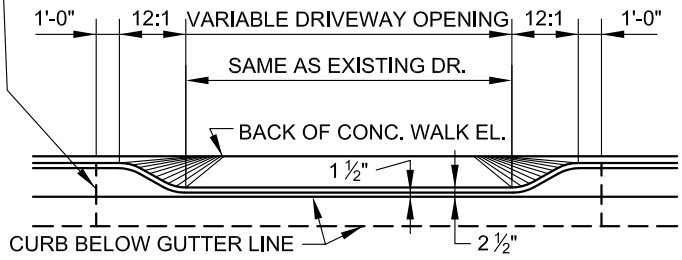

FRONT VIEW

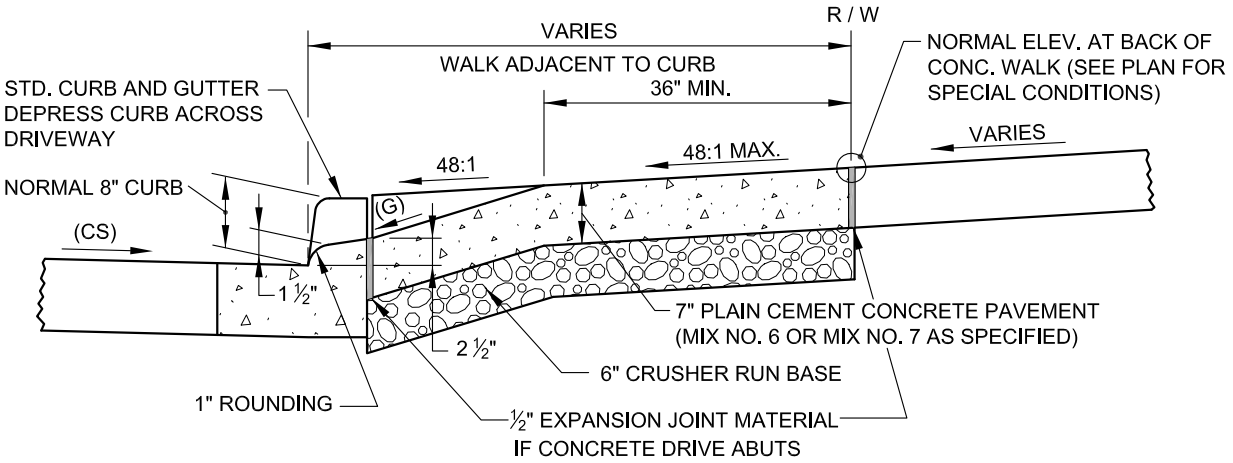

DRIVEWAY SECTION TYPE "A"

NOTE: THE MAXIMUM ALGEBRAIC DIFFERENCE IN GRADES BETWEEN THE CROSS SLOPE OF THE STREET (CS) AND THE GRADE OF THE DRIVEWAY (G) SHALL NOT EXCEED 11%

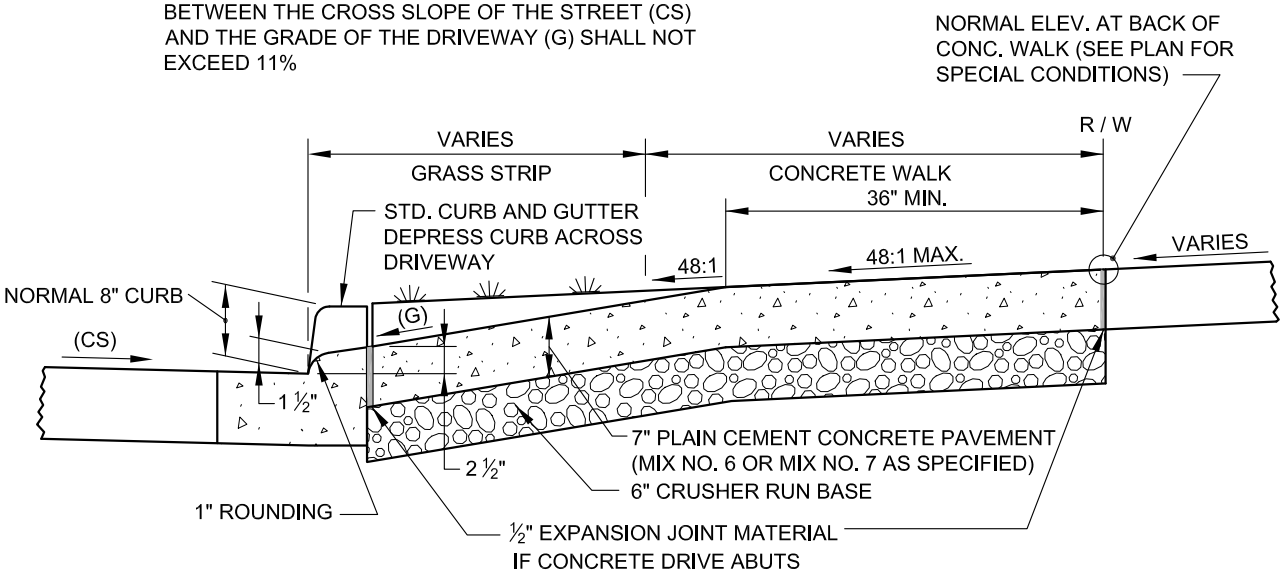

DRIVEWAY SECTION TYPE "B"

APPROVED:

DIVISION CHIEF, TRANSPORTATION ENGINEERING AND CONSTRUCTION

DIRECTOR, DEPARTMENT OF TRANSPORTATION

CITY OF BALTIMORE
DEPARTMENT OF TRANSPORTATION
TRANSPORTATION ENGINEERING AND CONSTRUCTION

ISSUED	REVISED	REVISED
8 / 2010		

TYPICAL DRIVEWAY

STANDARD NO.
BC 500.01

SCALE : NONE

SHEET 1 OF 1

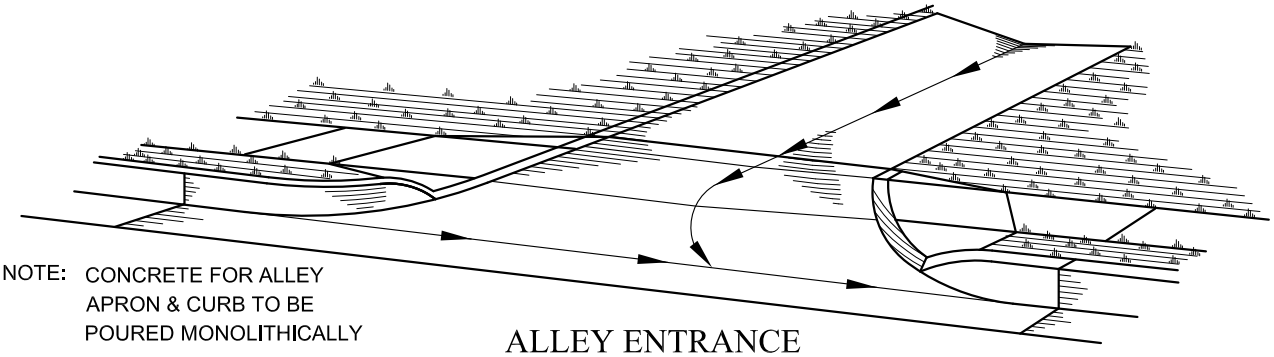

NOTE: CONCRETE FOR ALLEY APRON & CURB TO BE POURED MONOLITHICALLY

ALLEY ENTRANCE

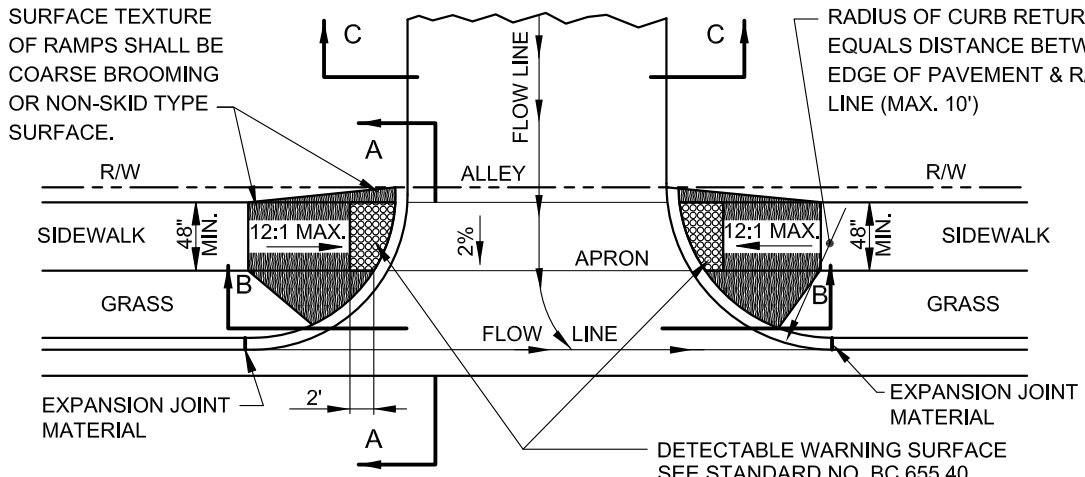

* H = HEIGHT OF CURB

PLAN

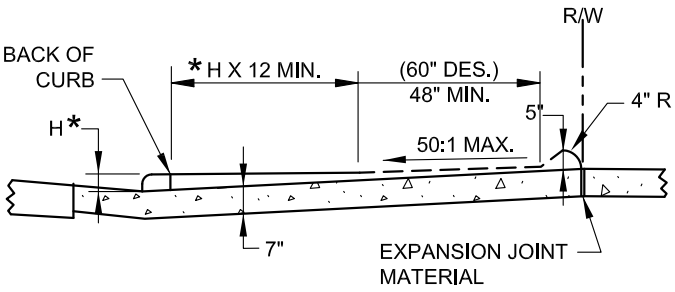

SECTION A-A

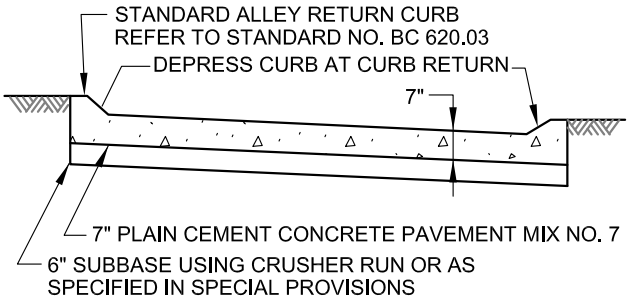

SECTION B-B

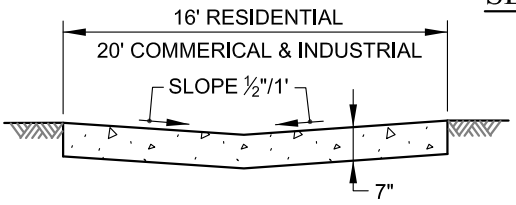

SECTION C-C

NOTES

1. TO BE USED ON SIDEWALKS AT ALLEYS WHERE THE GEOMETRY SPECIFIED IN THE DETAILS ABOVE CAN BE SATISFIED. MAY BE MODIFIED TO SUIT A PARTICULAR LOCATION.
2. WHERE 48" SIDEWALK CAN NOT BE PROVIDED, A DESIGN WAIVER MUST BE REQUESTED.
3. NO TRAVERSE SLOPE ON THE RAMP OR SIDEWALK SHALL EXCEED 12:1 IN THE DIRECTION OF PEDESTRIAN TRAVEL.
4. EXPANSION JOINT MATERIAL SHALL BE INSTALLED IN ACCORDANCE WITH BC 655.01.
5. SIDEWALK RAMP SHALL BE INCLUDED IN THE PRICE BID FOR CONCRETE SIDEWALK. DETECTABLE WARNING SURFACE SHALL BE PAID FOR ON A SQUARE FOOT BASIS.
6. SIDEWALK RAMPS TO BE SHOWN ON PLANS SYMBOLICALLY AND REFERENCED WITH THE CENTER OF THE RAMP ALIGNED TO A STATION ON THE CONSTRUCTION CENTERLINE. SEPARATE DETAILS SHALL BE SHOWN WHERE PROPOSED RAMP VARIES FROM STANDARD CASES.
7. A 60"x 60" PASSING ZONE IS REQURED FOR EVERY 200' OF SIDEWALK.

APPROVED:

DIVISION CHIEF, TRANSPORTATION ENGINEERING AND CONSTRUCTION

DIRECTOR, DEPARTMENT OF TRANSPORTATION

CITY OF BALTIMORE
DEPARTMENT OF TRANSPORTATION
TRANSPORTATION ENGINEERING AND CONSTRUCTION

ISSUED	REVISED	REVISED
8 / 2010		

ALLEY ENTRANCE

STANDARD NO.
BC 500.11

SCALE : NONE

SHEET 1 OF 1

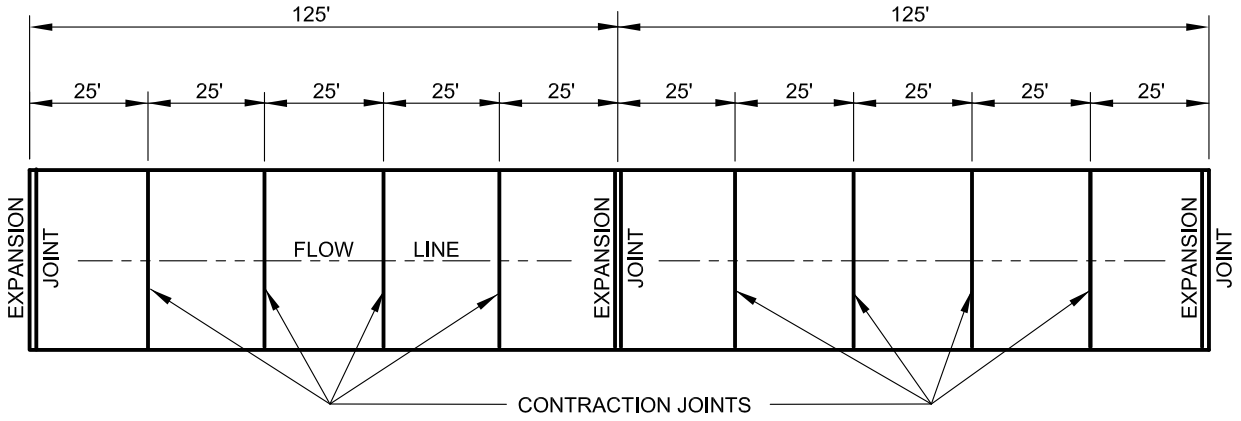

PLAN

MAXIMUM SPACING SHOWN

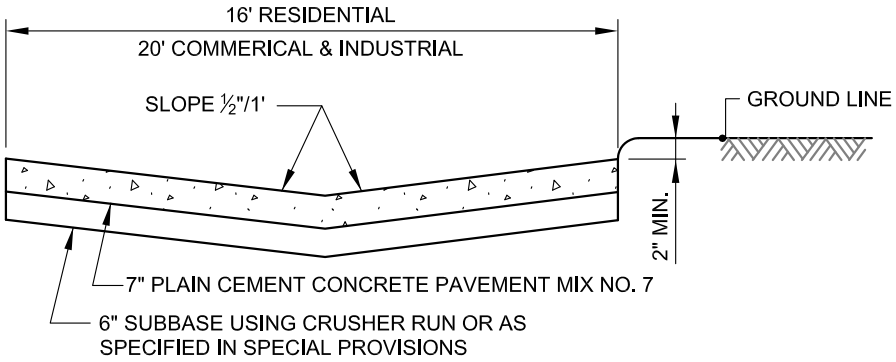

TYPICAL SECTION

GENERAL NOTES

1. WORK TO BE DONE IN ACCORDANCE WITH SECTION 32 13 13.33 OF THE STANDARD SPECIFICATIONS DATED 2006.

2. PLACE AN EXPANSION JOINT AT INTERVALS SHOWN AND AT ALL ANGLES IN ALLEYS.

3. NO LONGITUDINAL CONSTRUCTION JOINTS WILL BE PERMITTED.

4. PLACE ½" PERFORMED EXPANSION MATERIAL AT ALL ABUTTING CONCRETE.

5. AN EDGING TOOL WITH A ONE - QUARTER (1/4) INCH RADIUS SHALL BE USED TO FINISH THE CONCRETE NEXT TO EXPANSION AND CONTRACTION JOINTS, UNLESS CONTRACTION JOINT ARE SAWED.

6. EXPANSION AND CONTRACTION JOINTS SHALL BE IN ACCORDANCE WITH STD. PLATE BC 572.21 AND BC 572.92-1, EXCEPT AS FOLLOWS: EXPANSION JOINTS - USE 3/4" DIA. DOWEL BAR CONTRACTION JOINTS - DOWEL BARS NOT REQUIRED.

APPROVED:

DIVISION CHIEF, TRANSPORTATION ENGINEERING AND CONSTRUCTION

DIRECTOR, DEPARTMENT OF TRANSPORTATION

CITY OF BALTIMORE
DEPARTMENT OF TRANSPORTATION
TRANSPORTATION ENGINEERING AND CONSTRUCTION

ISSUED	REVISED	REVISED
8 / 2010		

CONCRETE ALLEY

STANDARD NO.
BC 500.12

SCALE : NONE

SHEET 1 OF 1

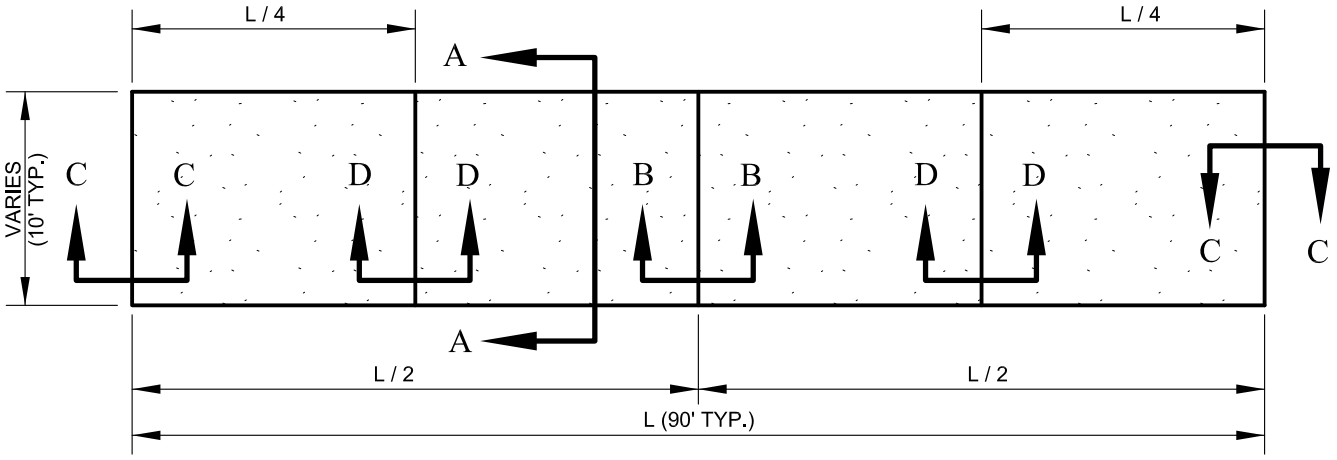

PLAN

FULL DEPTH SAW CUT THE PERIMETER

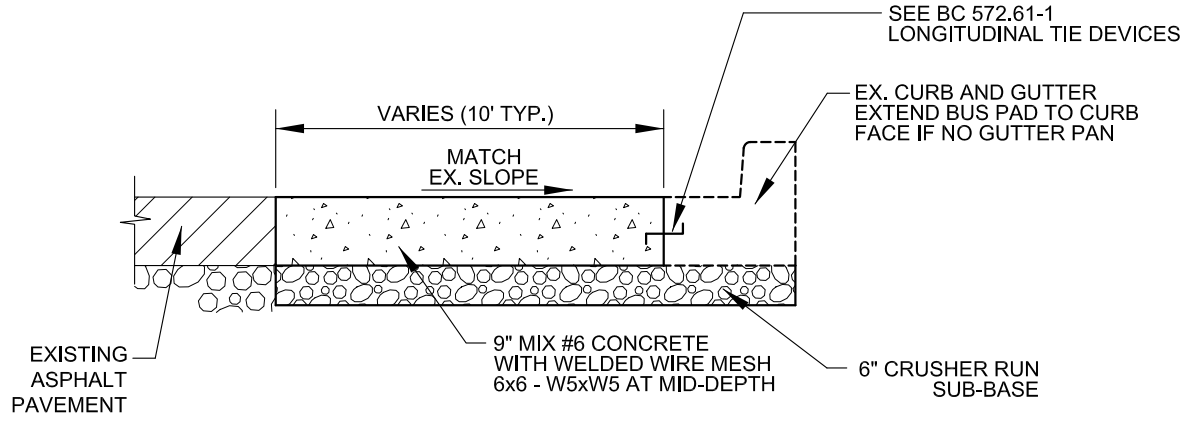

SECTION A-A

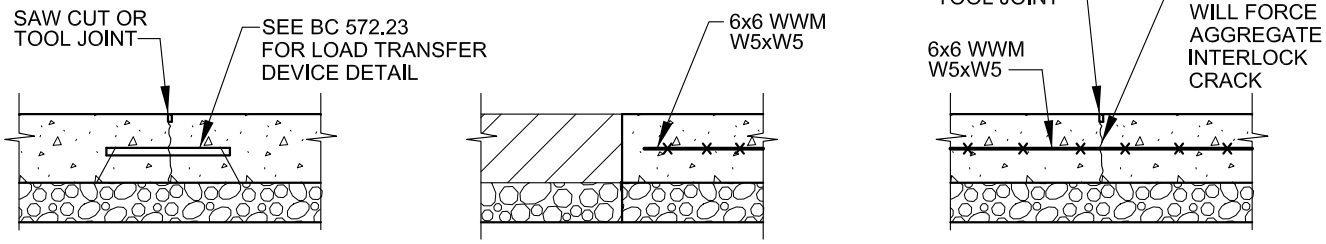

SECTION B-B

DOWELED CONTRACTION JOINT

SECTION C-C

SECTION D-D

DUMMY CONTRACTION JOINT

DETAIL FOR BUS PADS ADJACENT TO FLEXIBLE PAVEMENT

APPROVED :

DIVISION CHIEF, TRANSPORTATION ENGINEERING AND CONSTRUCTION

DIRECTOR, DEPARTMENT OF TRANSPORTATION

CITY OF BALTIMORE
DEPARTMENT OF TRANSPORTATION
TRANSPORTATION ENGINEERING AND CONSTRUCTION

BUS STOPPING PAD

ISSUED	REVISED	REVISED
8 / 2010		

STANDARD NO.
BC 500.13-1

SCALE : NONE

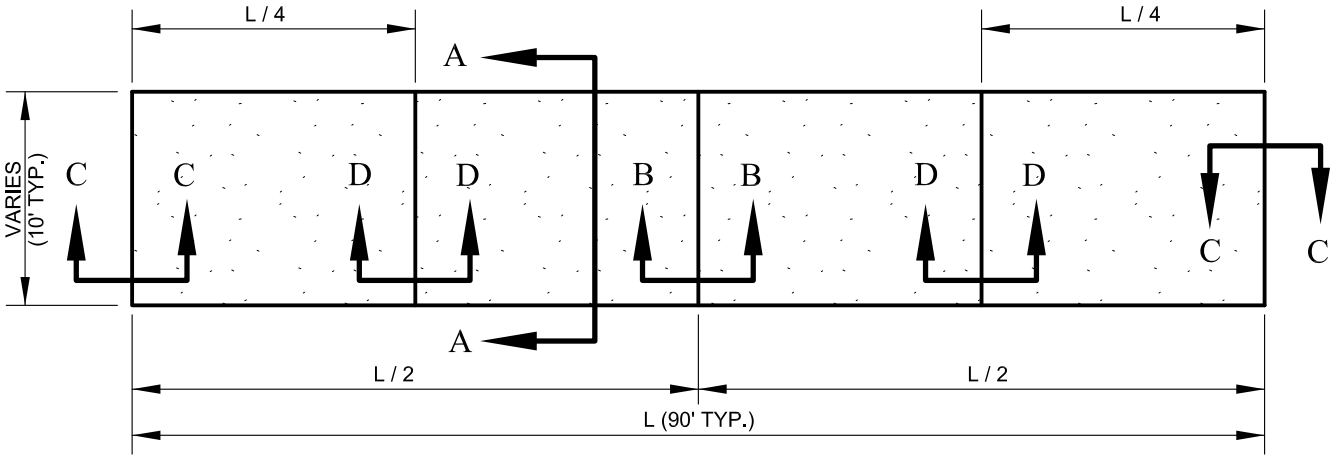

PLAN

FULL DEPTH SAW CUT THE PERIMETER

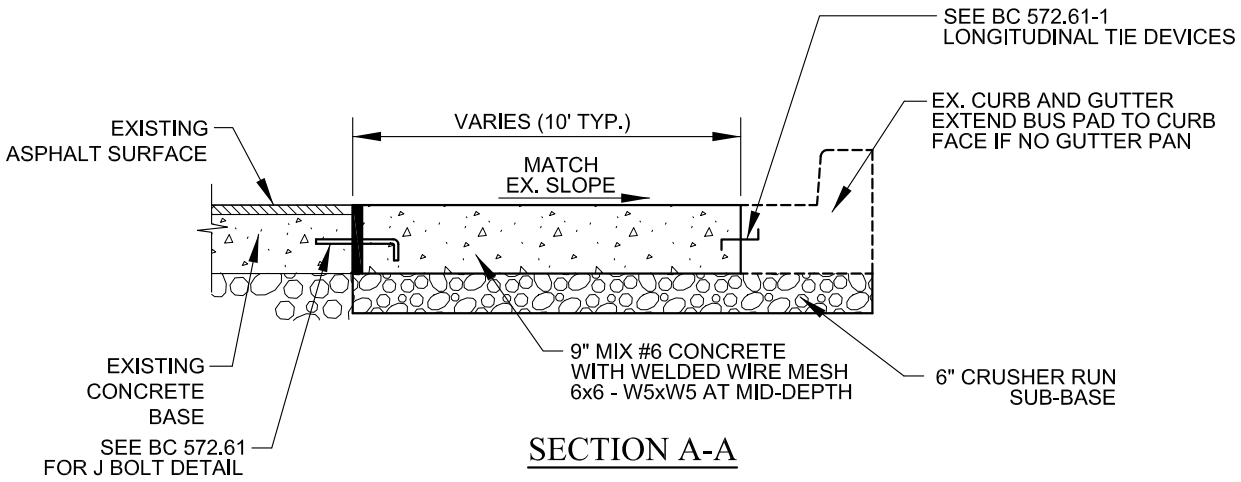

SECTION A-A

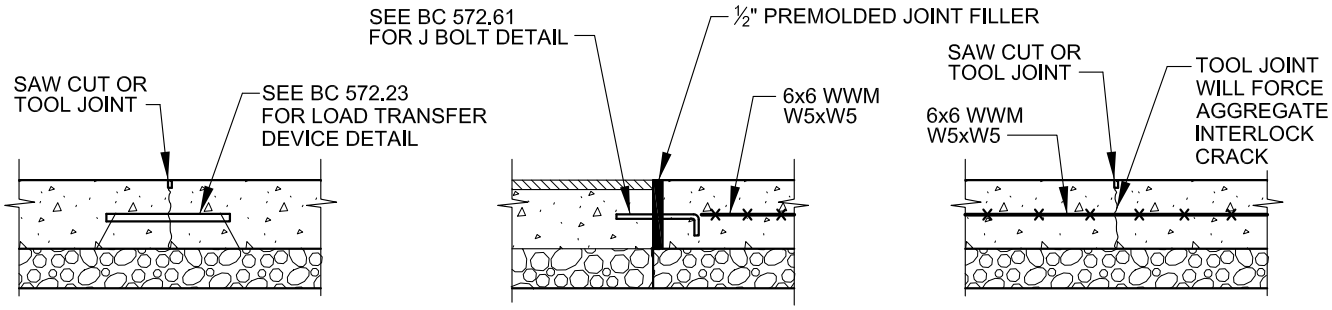

SECTION B-B

DOWELED CONTRACTION JOINT

SECTION C-C

SECTION D-D

DUMMY CONTRACTION JOINT

DETAIL FOR BUS PADS ADJACENT TO RIGID PAVEMENT

APPROVED :

DIVISION CHIEF, TRANSPORTATION ENGINEERING AND CONSTRUCTION

DIRECTOR, DEPARTMENT OF TRANSPORTATION

CITY OF BALTIMORE
DEPARTMENT OF TRANSPORTATION
TRANSPORTATION ENGINEERING AND CONSTRUCTION

ISSUED	REVISED	REVISED
8 / 2010		

BUS STOPPING PAD

STANDARD NO.
BC 500.13-2

SCALE : NONE

SHEET 2 OF 2

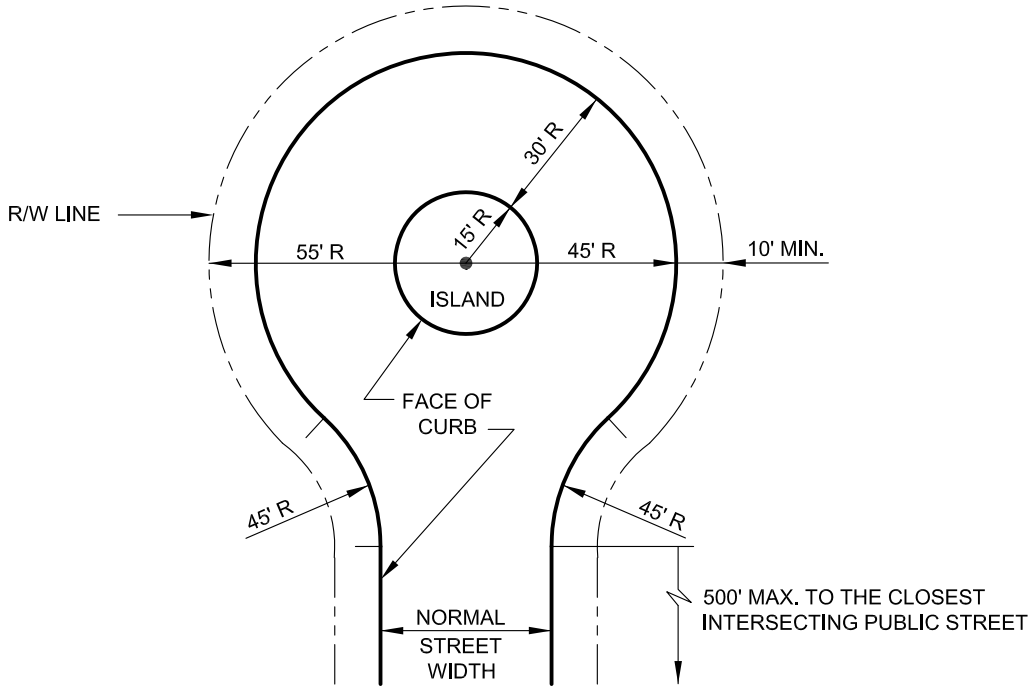

NOTE: CENTER ISLAND MAY BE OMITTED

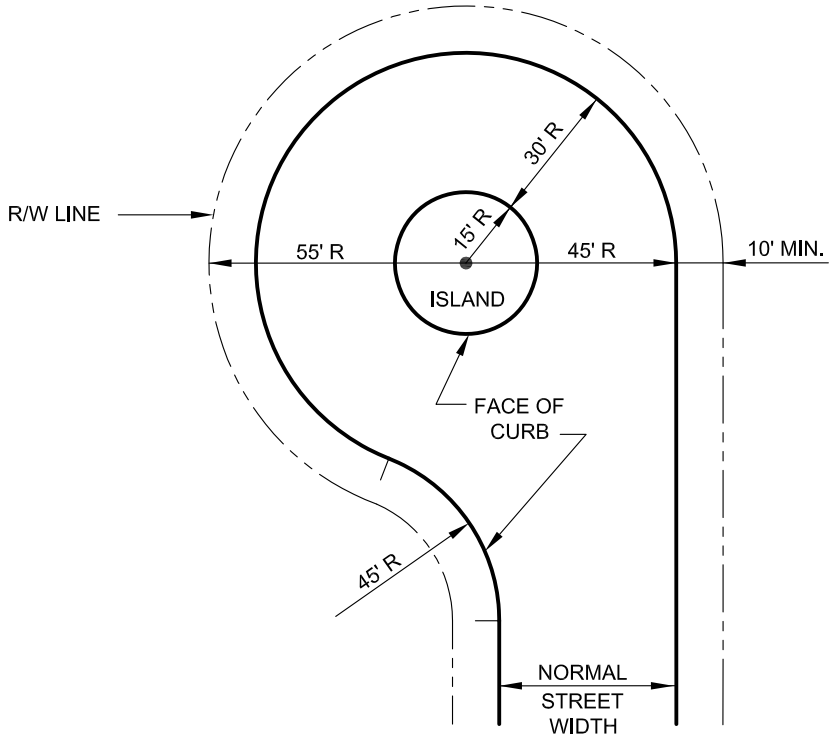

NOTE: STRAIGHT IN PARKING IS NOT PERMITTED WITH THE ABOVE LAYOUTS

APPROVED:

DIVISION CHIEF, TRANSPORTATION ENGINEERING AND CONSTRUCTION

DIRECTOR, DEPARTMENT OF TRANSPORTATION

CITY OF BALTIMORE
DEPARTMENT OF TRANSPORTATION
TRANSPORTATION ENGINEERING AND CONSTRUCTION

CUL - DE - SAC

ISSUED	REVISED	REVISED
8 / 2010		

STANDARD NO.
BC 500.21

SCALE : NONE

SHEET 1 OF 1

NOTE: A TEE TURN - AROUND SHALL BE USED IN LIEU OF A CUL-DE-SAC ONLY IF THE STREET IS TO BE EXTENDED IN THE FUTURE.

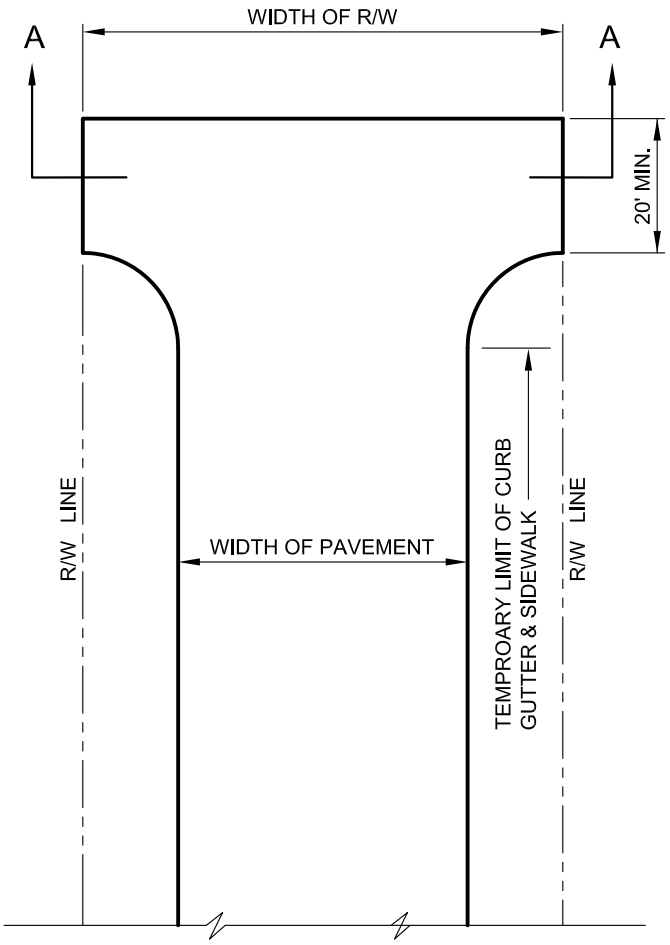

PLAN

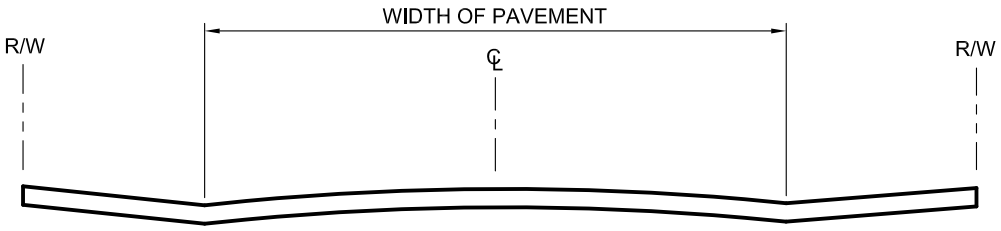

SECTION A-A

APPROVED:

DIVISION CHIEF, TRANSPORTATION ENGINEERING AND CONSTRUCTION

DIRECTOR, DEPARTMENT OF TRANSPORTATION

CITY OF BALTIMORE
DEPARTMENT OF TRANSPORTATION
TRANSPORTATION ENGINEERING AND CONSTRUCTION

TEE TURN - AROUND

ISSUED	REVISED	REVISED
8 / 2010		

STANDARD NO.
BC 500.22

SCALE : NONE

SHEET 1 OF 1

NOTE: HINGED MATS MAY BE USED AT CONTRACTOR'S OPTION.

WELDED WIRE MESH NO. 2 GA. BOTH WAYS
TRANS. 6"x12" MESH SHEET 14'-0" LONG.
CONSECUTIVE SHEETS TO BE LAPPED 14".

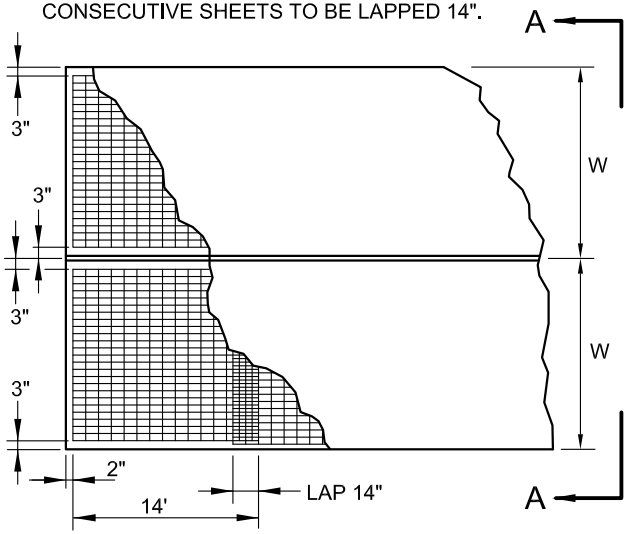

PLAN

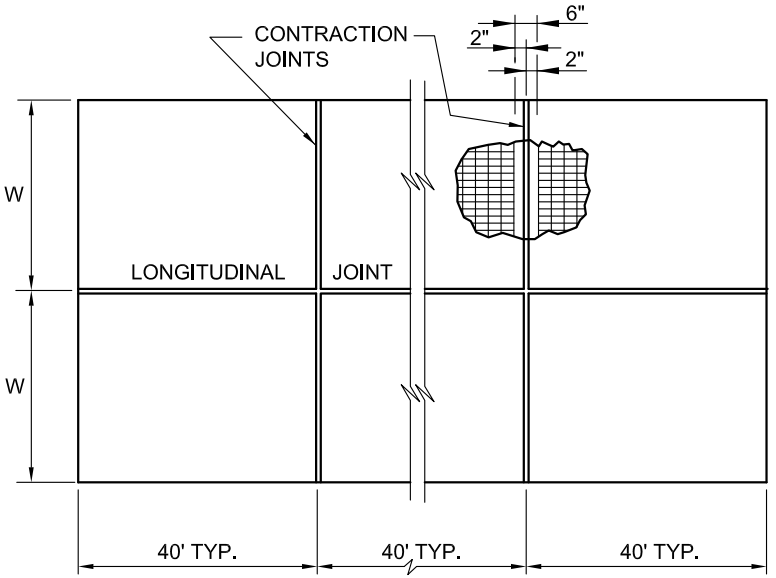

PLAN

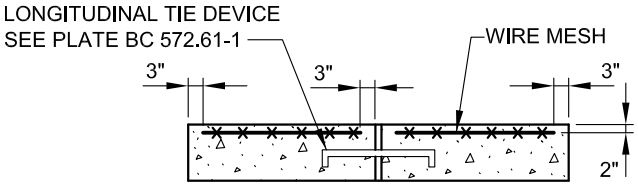

SECTION A-A

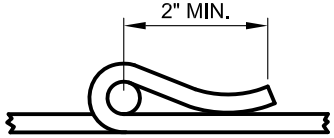

TYPE "A"

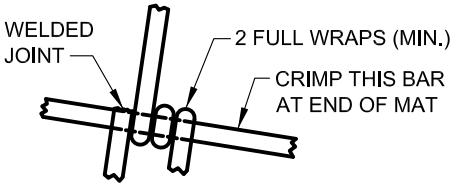

TYPE "B"

LANE W	MESH WIDTH	MESH LENGTH	WEIGHT PER MAT LBS.
8'	7'-6"	14'	62
10'	9'-6"	14'	76
11'	10'-6"	14'	84
12'	11'-6"	14'	91
13'	12'-6"	14'	96

TYPES OF HINGES

NOTES:

1. HINGES TO BE LOCATED ON THE LONG BAR NEAREST THE CENTER OF THE MESH. THE BAR AT WHICH HINGES ARE USED SHALL BE OFFSET ½".
2. OTHER TYPES MAY BE USED UPON APPROVAL OF THE ENGINEER.
3. EXPANSION JOINTS ARE NOT REQUIRED.

APPROVED:
DIVISION CHIEF, TRANSPORTATION ENGINEERING AND CONSTRUCTION
DIRECTOR, DEPARTMENT OF TRANSPORTATION

CITY OF BALTIMORE
DEPARTMENT OF TRANSPORTATION
TRANSPORTATION ENGINEERING AND CONSTRUCTION

PLACEMENT OF BAR MATS REINFORCED CONCRETE PAVEMENT

STANDARD NO. BC 572.01

ISSUED 8 / 2010
REVISED
REVISED

SCALE : NONE
SHEET 1 OF 1

LONGITUDINAL SECT. AREA SQ. IN. PER FT. 0.119
TRANSERSE SECT AREA SQ. IN. PER FT. 0.061
WEIGHT PER 100 SQ. FT. 64 LBS.

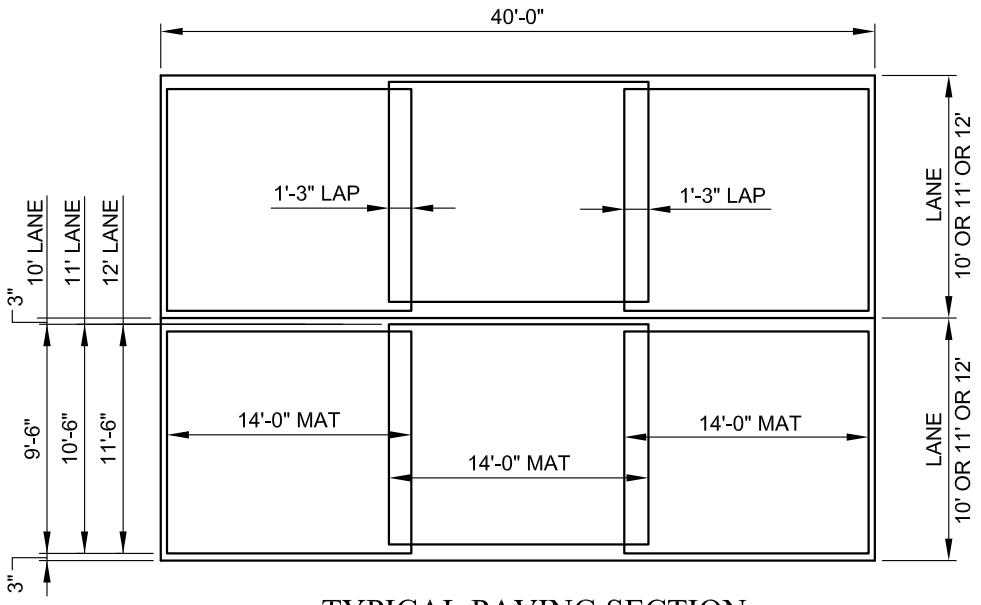

TYPICAL PAVING SECTION

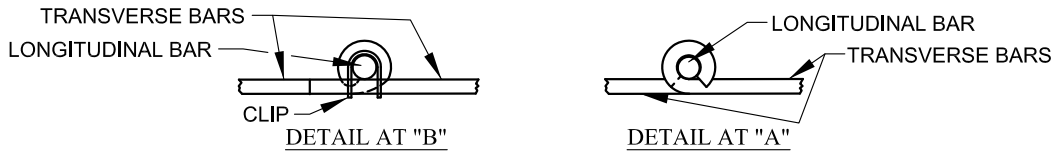

DETAILS FOR HINGED MAT

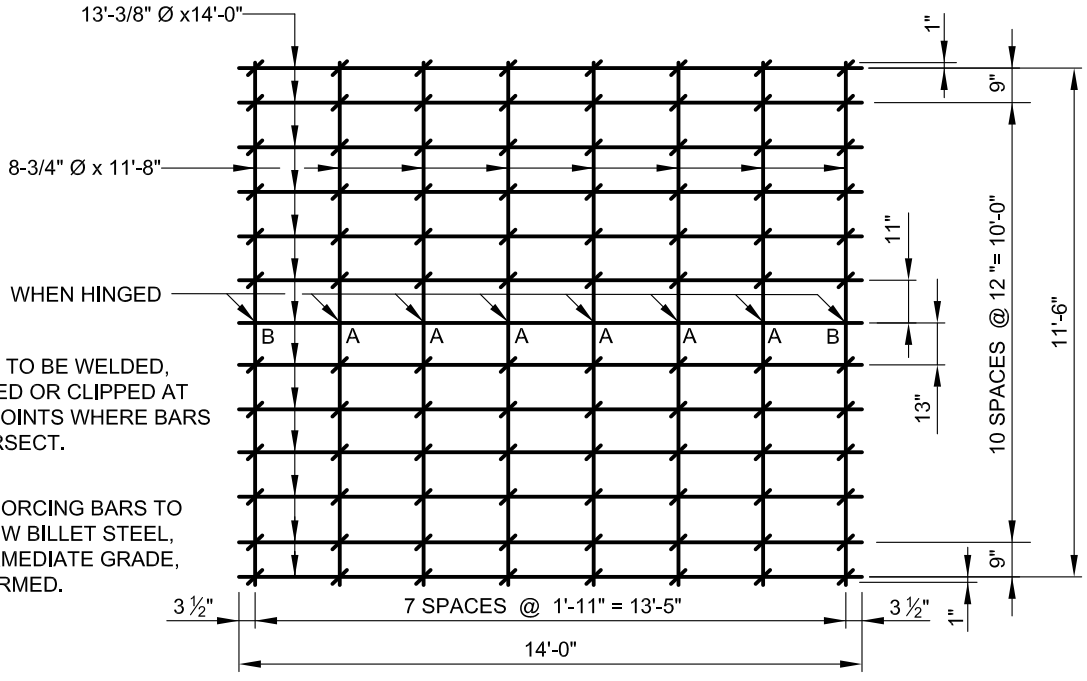

NOTE: MATS TO BE WELDED, HINGED OR CLIPPED AT ALL POINTS WHERE BARS INTERSECT.

REINFORCING BARS TO BE NEW BILLET STEEL, INTERMEDIATE GRADE, DEFORMED.

NOTE: MATS TO BE PLACED WITH THE TOP OF THE LONGITUDINAL BAR 2 ½" BELOW THE TOP OF PAVEMENT.

BAR MAT FOR 12'-0" LANE

NOTE: HINGED MATS MAY BE USED AT CONTRACTOR'S OPTION.

THE BAR AT WHICH HINGES ARE USED SHALL BE OFFSET 1"

APPROVED:

DIVISION CHIEF, TRANSPORTATION ENGINEERING AND CONSTRUCTION

DIRECTOR, DEPARTMENT OF TRANSPORTATION

CITY OF BALTIMORE
DEPARTMENT OF TRANSPORTATION
TRANSPORTATION ENGINEERING AND CONSTRUCTION

ISSUED	REVISED	REVISED
8 / 2010		

CLIPPED OR WELDED BAR MATS REINF. CONC. PAVEMENT

STANDARD NO. BC 572.02

SCALE : NONE

SHEET 1 OF 1

(WELDING MAY BE USED IN LIEU OF CLIPS)

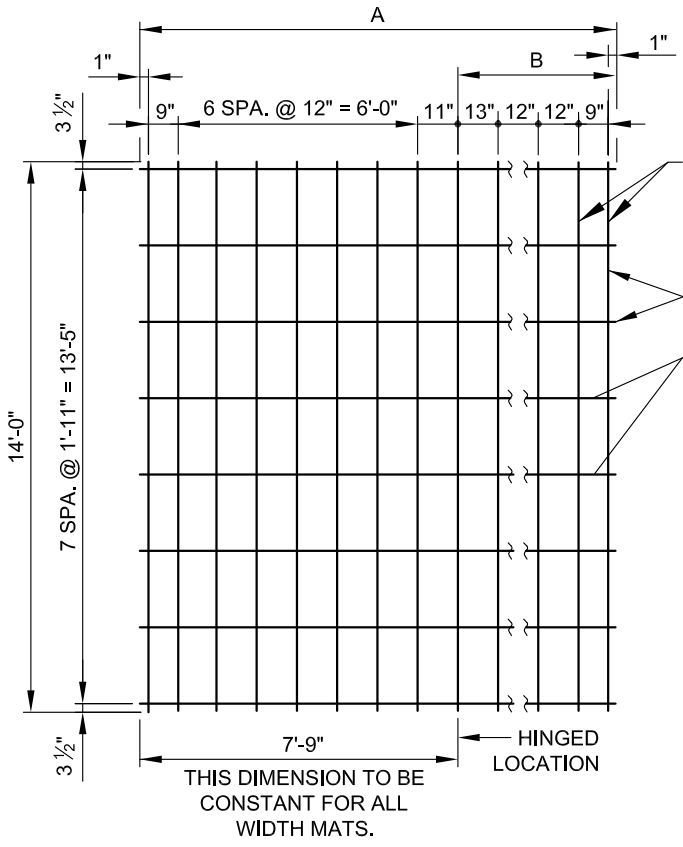

NOTE:
HINGED BAR MAT REINFORCEMENT FOR 10 THRU 14 FT. LANE.

FABRICATE MAT TO ASTM A-184. ALL INTERSECTIONS TO BE HINGED, CLIPPED OR WELDED. LONGITUDINAL BARS ASTM A-15 INTER. GRADE, TRANSVERSE BARS ASTM A-15 INTER. GRADE, DEFORMATIONS ASTM A-305.

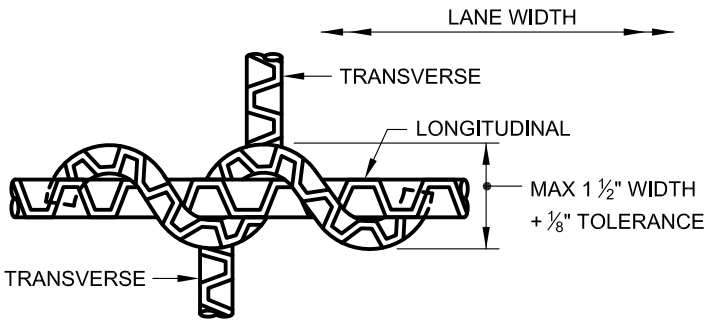

PIGTAIL HINGE DETAIL (REVOLVED 90°)

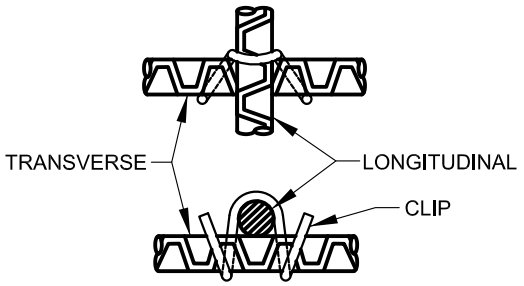

CLIPPED INTERSECTION DETAIL

LANE WIDTH	A	B	MATERIAL		CLIPS	TOTAL WT.	WT/100□'
			FOR CONSTANT SECTION	FOR VARIABLE SECTION		POUNDS	
10'	9'-8"	1'-11"	9 - #3 @ 14'-0" = 47.38 LB. 8 - #3 @ 8'-1" = 24.31 LB.	2 - #3 @ 14'-0" = 10.53 LB. 8 - #3 @ 2'-3" = 6.77 LB.	80	90.89	67.14
11'	10'-8"	2'-11"	9 - #3 @ 14'-0" = 47.38 LB. 8 - #3 @ 8'-1" = 24.31 LB.	3 - #3 @ 14'-0" = 15.79 LB. 8 - #3 @ 3'-3" = 9.78 LB.	88	99.37	66.52
12'	11'-8"	3'-11"	9 - #3 @ 14'-0" = 47.38 LB. 8 - #3 @ 8'-1" = 24.31 LB.	4 - #3 @ 14'-0" = 21.06 LB. 8 - #3 @ 4'-3" = 12.78 LB.	96	107.81	65.99
13'	12'-8"	4'-11"	9 - #3 @ 14'-0" = 47.38 LB. 8 - #3 @ 8'-1" = 24.31 LB.	5 - #3 @ 14'-0" = 26.32 LB. 8 - #3 @ 5'-3" = 15.79 LB.	104	116.29	65.56
14'	13'-8"	5'-11"	9 - #3 @ 14'-0" = 47.38 LB. 8 - #3 @ 8'-1" = 24.31 LB.	6 - #3 @ 14'-0" = 31.58 LB. 8 - #3 @ 6'-3" = 18.80 LB.	112	124.70	65.16

APPROVED:

DIVISION CHIEF, TRANSPORTATION ENGINEERING AND CONSTRUCTION

DIRECTOR, DEPARTMENT OF TRANSPORTATION

CITY OF BALTIMORE
DEPARTMENT OF TRANSPORTATION
TRANSPORTATION ENGINEERING AND CONSTRUCTION

ISSUED	REVISED	REVISED
8 / 2010		

HINGED CLIPPED BAR MAT REINFORCED CONCRETE PAVEMENT

STANDARD NO.
BC 572.03

SCALE : NONE

SHEET 1 OF 1

(WELDING MAY BE USED IN LIEU OF CLIPS)

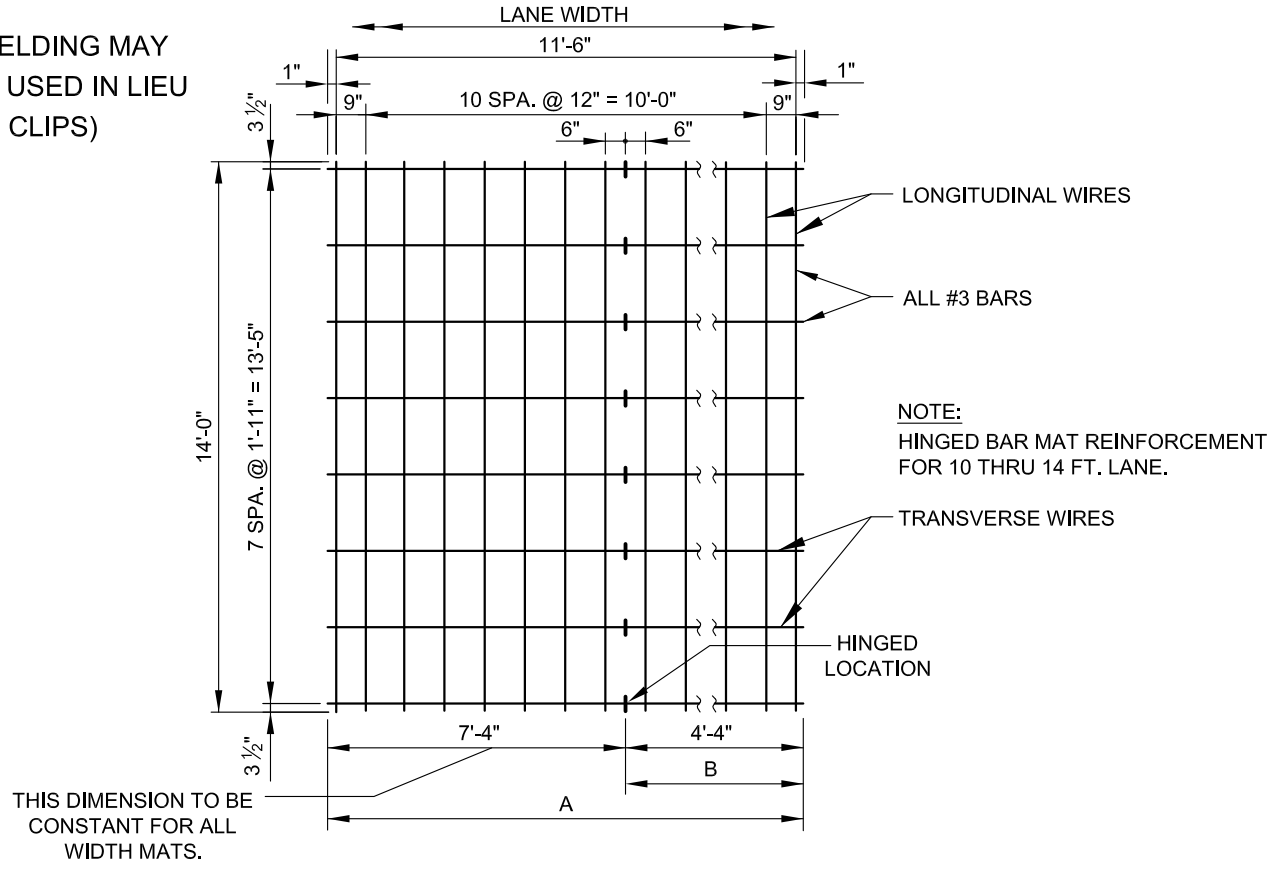

HOOKED HINGE BAR MAT REINFORCEMENT FOR 12'-0" LANE

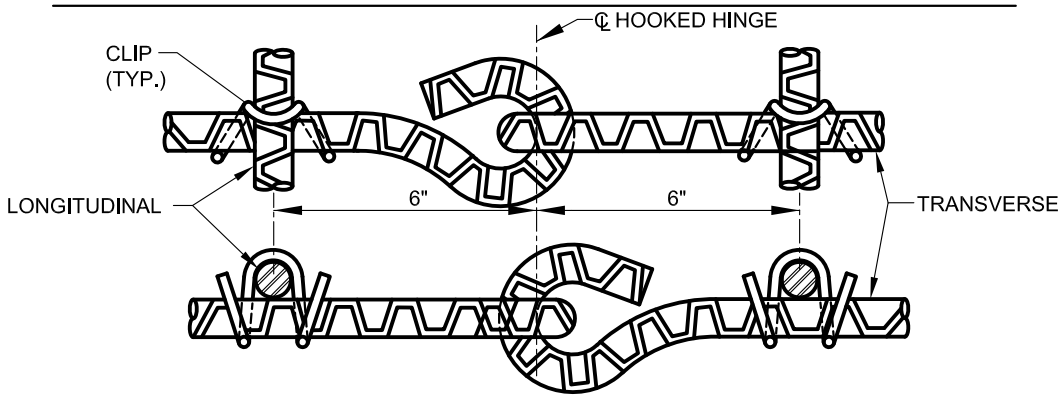

HOOKED HINGE DETAIL

LANE WIDTH	A	B	MATERIAL		CLIPS	TOTAL WT	WT/100□'
			FOR CONSTANT SECTION	FOR VARIABLE SECTION		POUNDS	
10'	9'-8"	2'-4"	8- #3 @ 14'-0" = 42.11 LB. 8 - #3 @ 7'-6" = 22.56 LB.	3 - #3 @ 14'-0" = 15.79 LB. 8 - #3 @ 2'-6" = 7.52 LB.	88	90.03	66.50
11'	10'-8"	3'-4"	8- #3 @ 14'-0" = 42.11 LB. 8 - #3 @ 7'-6" = 22.56 LB.	4 - #3 @ 14'-0" = 21.06 LB. 8 - #3 @ 3'-6" = 10.53 LB.	96	98.49	65.93
12'	11'-8"	4'-4"	8- #3 @ 14'-0" = 42.11 LB. 8 - #3 @ 7'-6" = 22.56 LB.	5 - #3 @ 14'-0" = 26.32 LB. 8 - #3 @ 4'-6" = 13.54 LB.	104	106.97	65.47
13'	12'-8"	5'-4"	8- #3 @ 14'-0" = 42.11 LB. 8 - #3 @ 7'-6" = 22.56 LB.	6 - #3 @ 14'-0" = 31.58 LB. 8 - #3 @ 5'-6" = 16.54 LB.	112	115.01	64.83
14'	13'-8"	6'-4"	8- #3 @ 14'-0" = 42.11 LB. 8 - #3 @ 7'-6" = 22.56 LB.	7 - #3 @ 14'-0" = 36.85 LB. 8 - #3 @ 6'-6" = 19.55 LB.	120	123.88	64.73

APPROVED:

DIVISION CHIEF, TRANSPORTATION ENGINEERING AND CONSTRUCTION

DIRECTOR, DEPARTMENT OF TRANSPORTATION

CITY OF BALTIMORE
DEPARTMENT OF TRANSPORTATION
TRANSPORTATION ENGINEERING AND CONSTRUCTION

ISSUED	REVISED	REVISED
8 / 2010		

HINGED CLIPPED BAR MAT REINFORCED CONCRETE PAVEMENT

STANDARD NO.
BC 572.04

SCALE : NONE

SHEET 1 OF 1

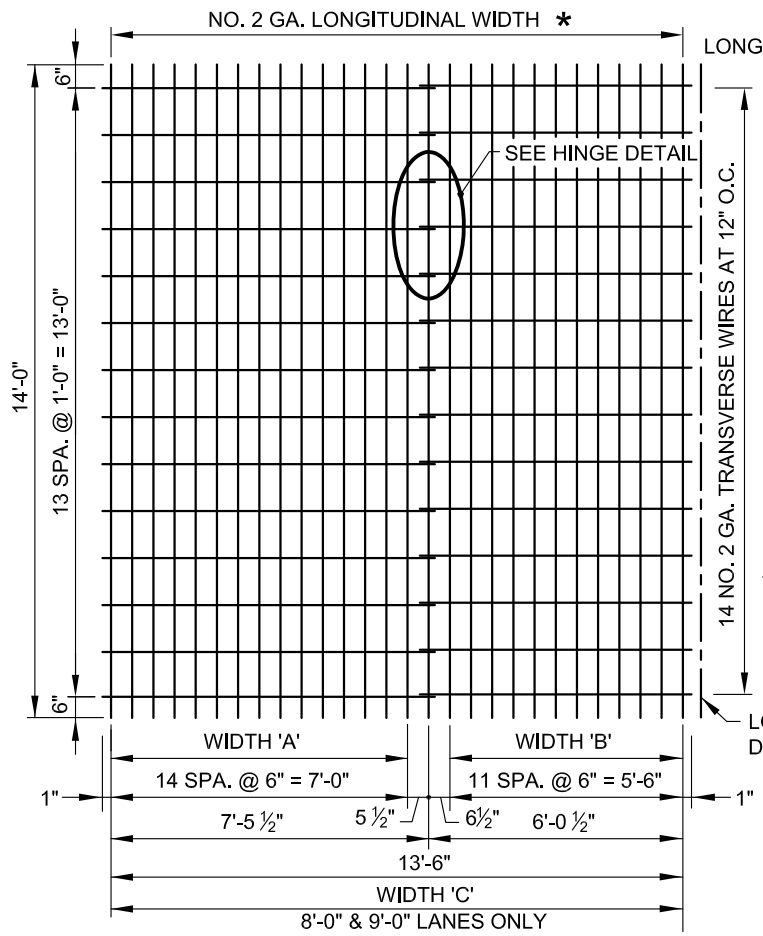

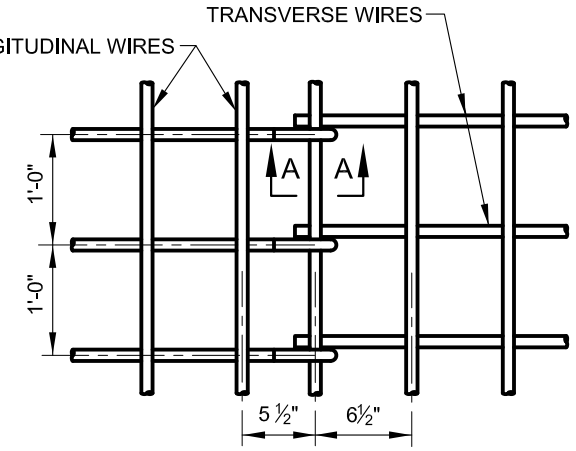

HINGE DETAIL

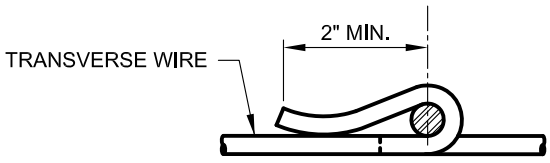

SECTION A-A

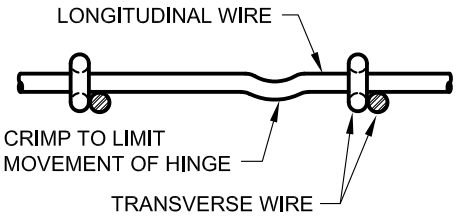

TYPICAL CRIMP DETAIL

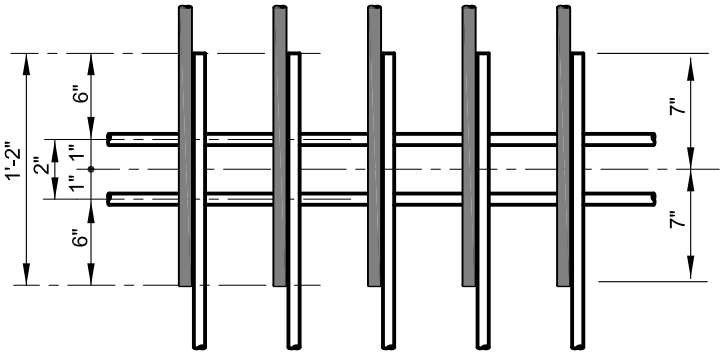

LAP DETAIL

* NO. 2 GA. LONGITUDINAL WIDTH

28 REQUIRED FOR 14'-0" LANE
26 REQUIRED FOR 13'-0" LANE
24 REQUIRED FOR 12'-0" LANE
22 REQUIRED FOR 11'-0" LANE
20 REQUIRED FOR 10'-0" LANE
18 REQUIRED FOR 9'-0" LANE
16 REQUIRED FOR 8'-0" LANE

WHERE LANE WIDTHS ARE 14'-0" OR LESS, THESE DIMENSIONS APPLY

LANE WIDTH	WIDTH 'A'	WIDTH 'B'	WIDTH 'C'	OVERALL WIDTH OF MESH	HINGED
14'-0"	14 SPA. @ 6" = 7'-0"	11 SPA. @ 6" = 5'-6"	———	13'-6"	YES
13'-0"	14 SPA. @ 6" = 7'-0"	9 SPA. @ 6" = 4'-6"	———	12'-6"	YES
12'-0"	14 SPA. @ 6" = 7'-0"	7 SPA. @ 6" = 3'-6"	———	11'-6"	YES
11'-0"	14 SPA. @ 6" = 7'-0"	5 SPA. @ 6" = 2'-6"	———	10'-6"	YES
10'-0"	14 SPA. @ 6" = 7'-0"	3 SPA. @ 6" = 1'-6"	———	9'-6"	YES
9'-0"	———	———	17 SPA. @ 6" = 8'-6"	8'-6"	NO
8'-0"	———	———	15 SPA. @ 6" = 7'-6"	7'-6"	NO

APPROVED:

DIVISION CHIEF, TRANSPORTATION ENGINEERING AND CONSTRUCTION

DIRECTOR, DEPARTMENT OF TRANSPORTATION

CITY OF BALTIMORE
DEPARTMENT OF TRANSPORTATION
TRANSPORTATION ENGINEERING AND CONSTRUCTION

ISSUED	REVISED	REVISED
8 / 2010		

WELDED WIRE MESH REINFORCED CONCRETE PAVEMENT

STANDARD NO.
BC 572.05

SCALE : NONE

SHEET 1 OF 1

1. DOWELS SHALL BE ASSEMBLED IN A RIGID FRAMEWORK OF A LENGTH EQUAL TO A LANE WIDTH. THE EXPANSION JOINT FRAMEWORK SHALL PROVIDE ADEQUATE SUPPORT TO MAINTAIN THE PREMOULDED JOINT FILLER IN PROPER HORIZONTAL AND VERTICAL ALIGNMENT.
2. THE FRAMEWORK SHALL BE STRONG ENOUGH TO SUPPORT A 200 POUND CONCENTRATED LOAD WITHOUT DEFORMATION OR FAILURE.
3. ANCHOR PINS SHALL BE USED TO SECURE THE FRAMEWORK AGAINST ANY MOVEMENT ALONG THE SUBGRADE.
4. THE DOWELS AND SUPPORTING FRAMEWORK SHALL BE STABLE AGAINST OVERTURNING, INDEPENDENT OF ANY ANCHOR PIN, AND UPON APPLICATION OF THE 200 POUND CONCENTRATED LOAD THEY SHALL NOT BE DEPRESSED BELOW THEIR NORMAL POSITION IN THE PAVEMENT SLAB.
5. THE FREE MOVING OR UNANCHORED END OF ALL DOWEL BARS IN BOTH CONTRACTION AND EXPANSION JOINTS SHALL BE COATED, AFTER INSTALLATION OF THE DEVICE UPON THE SUB- GRADE AND IMMEDIATELY PRIOR TO THE POURING OF THE CONCRETE, WITH GRAPHITE GREASE APPLIED WITH A GLOVED HAND. THIS SAME END OF ALL EXPANSION JOINT DOWEL BARS SHALL BE CAPPED WITH A SNUG FITTING,CLOSED END, METAL EXPANSION SLEEVE TEMPORARILY SECURED TO THE BAR SO AS TO PROVIDE A 1" LONG OPEN SOCKET BEYOND THE BAR END AND TO LAP BACK 2" ON THE BAR AT THE TIME OF INSTALLATION.
6. LOAD TRANSFER ASSEMBLY EXPANSION JOINTS SHALL BE REQUIRED AT ALL P.C.'S ON THE MAIN LINE OR AT 400' INTERVALS OR WHERE AND AS DIRECTED BY THE ENGINEER.
7. TRANSVERSE CONTRACTION JOINTS WITH LOAD TRANSFER ASSEMBLY DEVICES SHALL BE REQUIRED AT 40' INTERVALS BETWEEN ALL EXPANSION JOINTS OR AS DIRECTED BY THE ENGINEER.

EXPANSION JOINT ONLY:
DOWEL BAR TO BE A MINIMUM LENGTH OF 20". IF BAR IS NOT CENTERED, THE LONG SIDE SHALL BE THE FREE END.

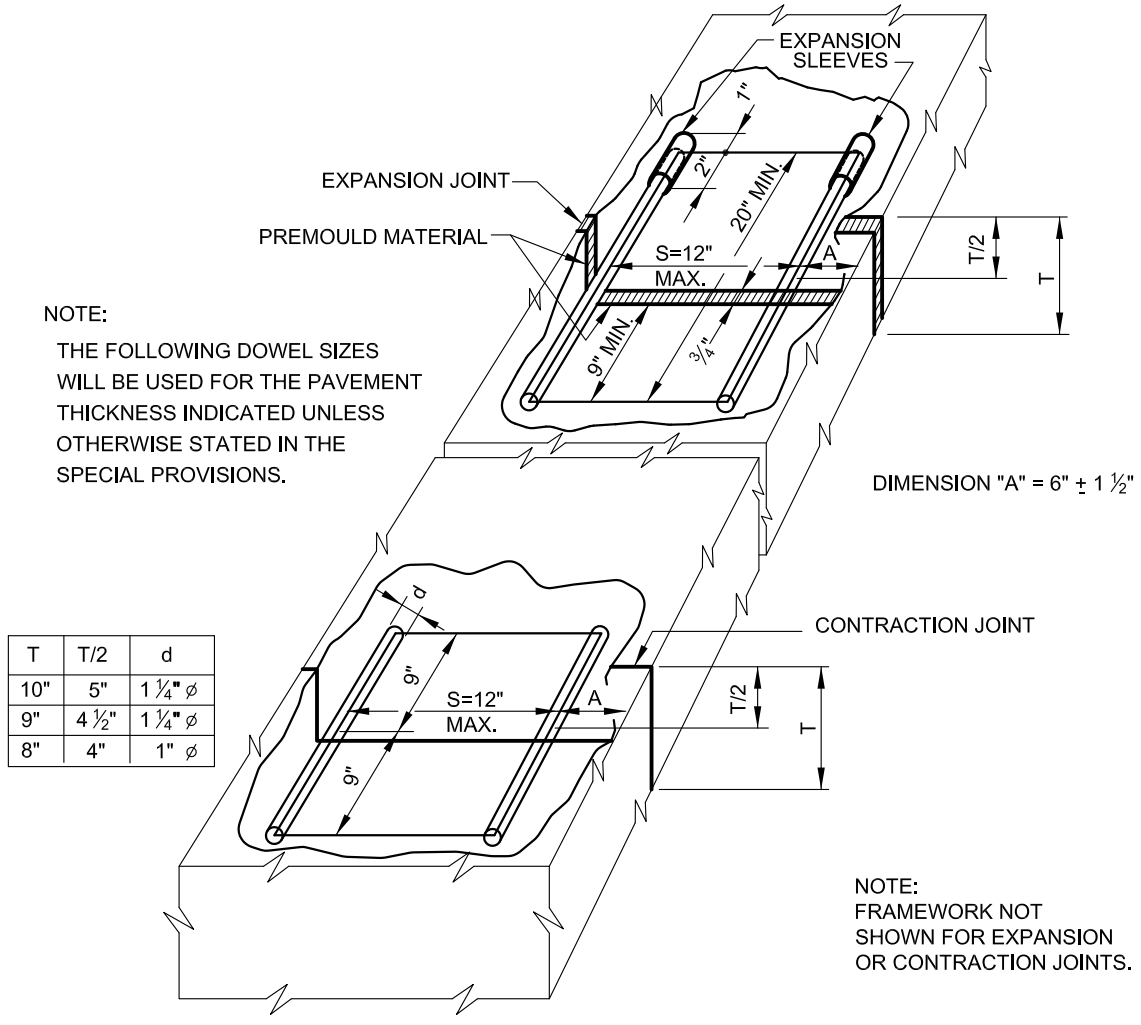

T	T/2	d
10"	5"	1 ¼" ø
9"	4 ½"	1 ¼" ø
8"	4"	1" ø

APPROVED:

DIVISION CHIEF, TRANSPORTATION ENGINEERING AND CONSTRUCTION

DIRECTOR, DEPARTMENT OF TRANSPORTATION

CITY OF BALTIMORE
DEPARTMENT OF TRANSPORTATION
TRANSPORTATION ENGINEERING AND CONSTRUCTION

REQUIREMENTS FOR LOAD TRANSFER DEVICES REINFORCED CONCRETE PAVEMENT

ISSUED	REVISED	REVISED
8 / 2010		

STANDARD NO.
BC 572.21

SCALE : NONE | SHEET 1 OF 1

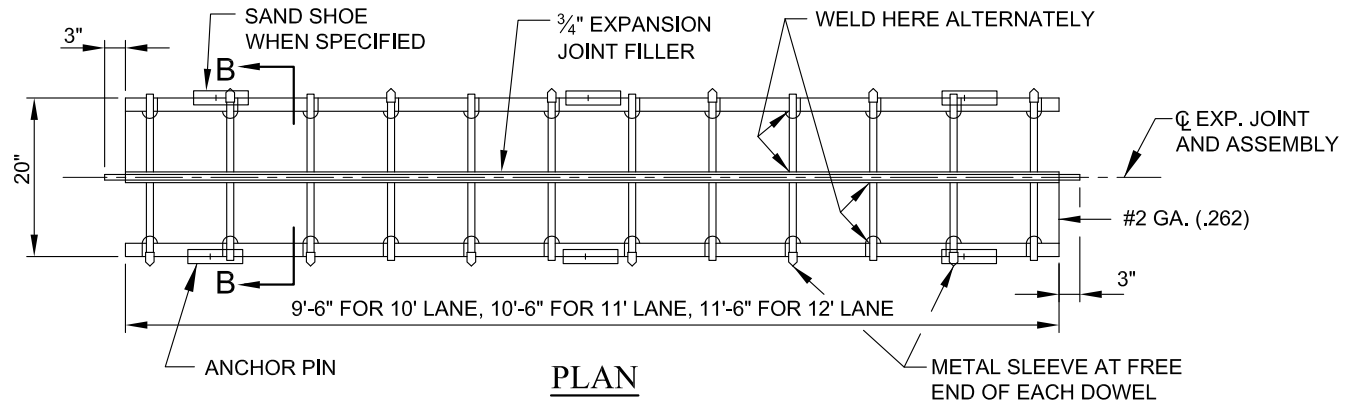

PLAN

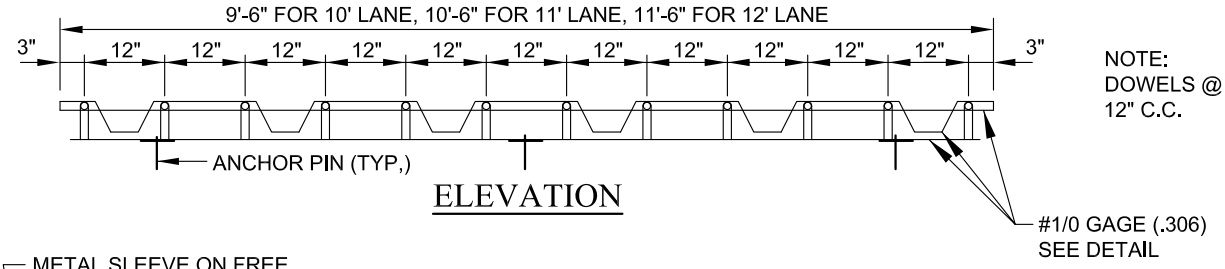

ELEVATION

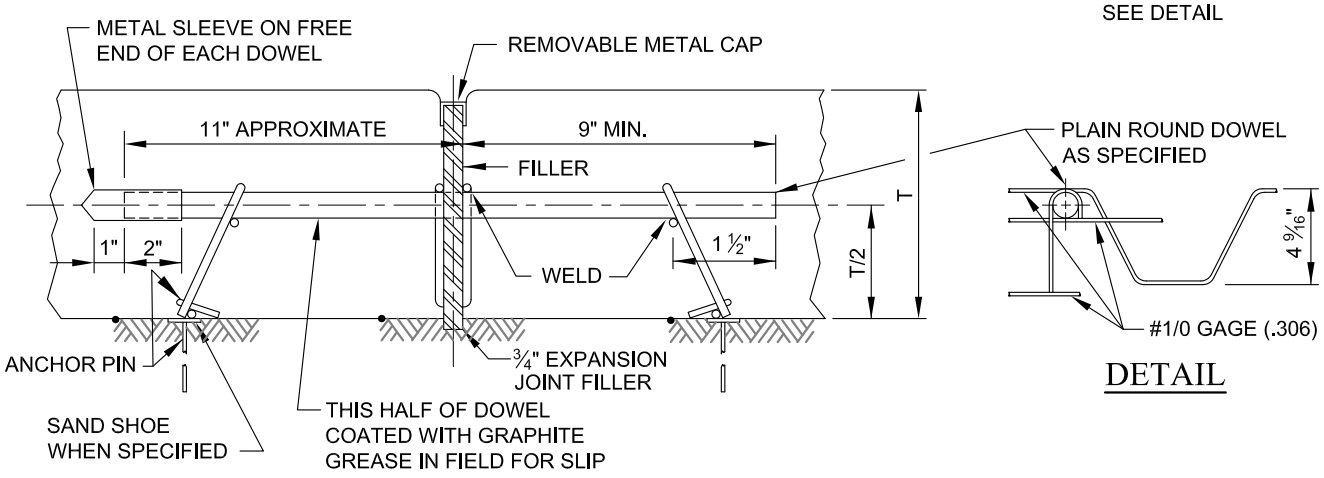

DETAIL

SECTION B-B

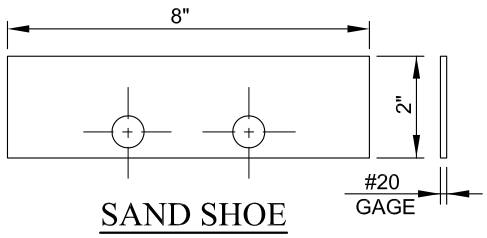

SAND SHOE

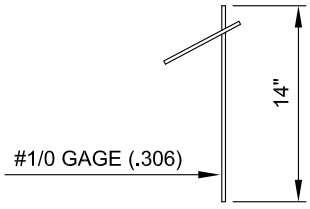

ANCHOR PIN

GENERAL NOTES

1. THE DIAMETER OF ALL DOWELS SHALL BE AS SHOWN ON STD. BC 572.21. SAND SHOES ADDED WHEN SPECIFIED ARE TO BE USED UNDER THE FRAME TO HOLD DOWEL UNIT IN TRUE ALIGNMENT. SAND SHOES ADDED IN FIELD. THE UNITS ARE TO BE STAKED IN PLACE BY DRIVING #1/0 GAGE PINS IN NUMBERS & TO A DEPTH AS SUBGRADE CONDITIONS MAKE NECESSARY ALONG BOTH SIDES OF FRAME. A MINIMUM OF SIX (6) STAKES SHALL BE USED FOR EACH ASSEMBLY. THE UNITS ARE TO BE SHOP FABRICATED AS TO FRAME, ETC... THE SAND SHOES (WHEN SPECIFIED). JOINT FILLER, JOINT CAP, AND EXPANSION TUBES ARE TO BE ADDED IN THE FIELD.

2. LOAD TRANSFER ASSEMBLY EXPANSION JOINTS SHALL BE REQUIRED AT ALL P.C.'S ON THE MAIN LINE OR AT 400' INTERVALS OR WHERE AND AS DIRECTED BY THE ENGINEER.

APPROVED :

DIVISION CHIEF, TRANSPORTATION ENGINEERING AND CONSTRUCTION

DIRECTOR, DEPARTMENT OF TRANSPORTATION

CITY OF BALTIMORE
DEPARTMENT OF TRANSPORTATION
TRANSPORTATION ENGINEERING AND CONSTRUCTION

ISSUED	REVISED	REVISED
8 / 2010		

LOAD TRANSFER ASSEMBLY
EXPANSION JOINTS

STANDARD NO.
BC 572.22

SCALE : NONE

SHEET 1 OF 1

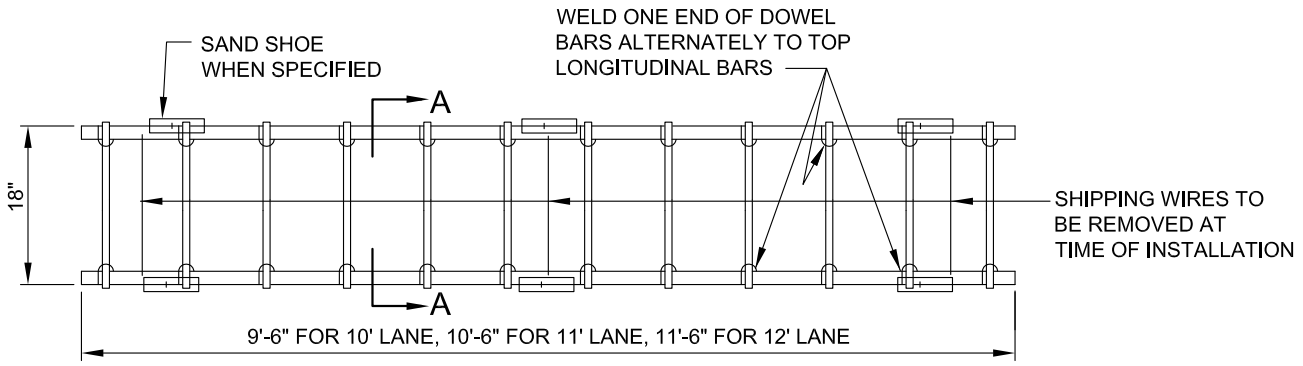

PLAN

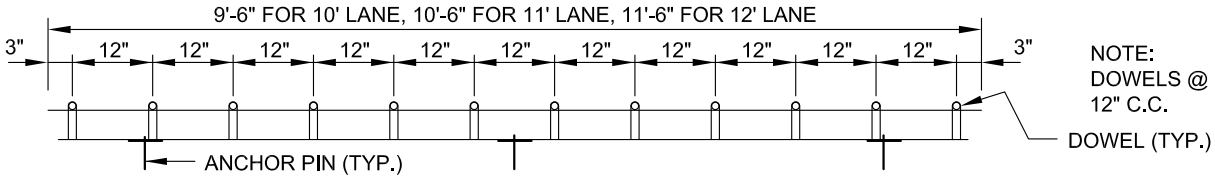

ELEVATION

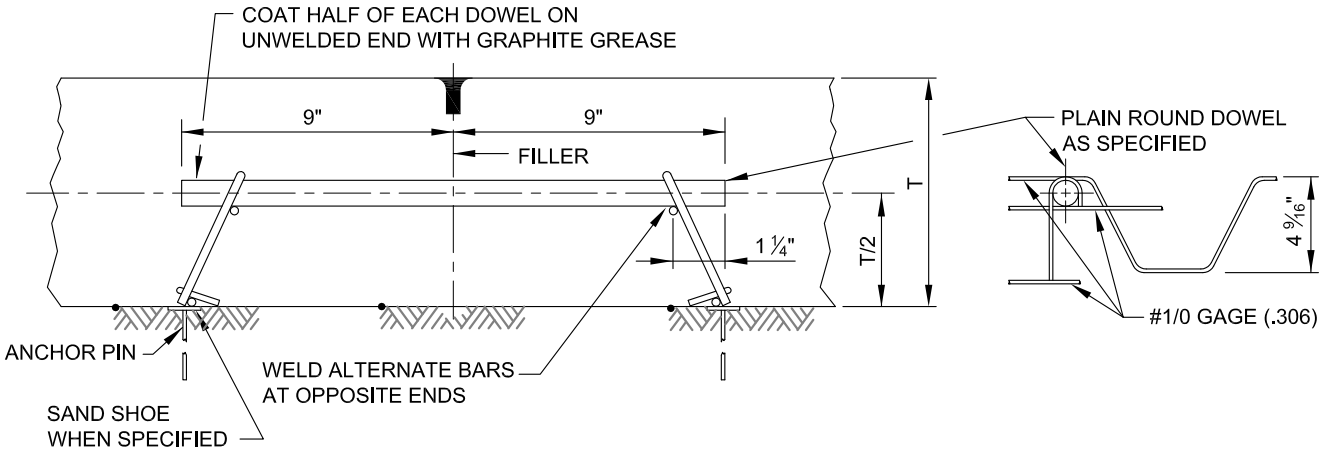

SECTION A-A

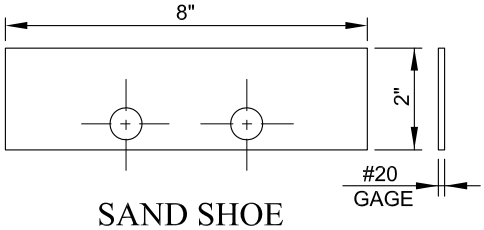

SAND SHOE

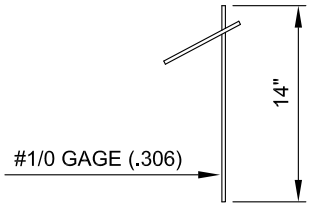

ANCHOR PIN

GENERAL NOTE

THE DIAMETER OF ALL DOWELS SHALL BE AS SHOWN ON STD. BC 572.21. SAND SHOES, ADDED WHEN SPECIFIED, ARE TO BE USED UNDER THE FRAME TO HOLD DOWEL UNIT IN TRUE ALIGNMENT. SAND SHOES ADDED IN FIELD. THE UNITS ARE TO BE STAKED IN PLACE BY DRIVING #1/0 GAGE PINS IN NUMBERS AND TO A DEPTH AS SUBGRADE CONDITIONS MAKE NECESSARY ALONG BOTH SIDES OF FRAME. A MINIMUM OF SIX (6) STAKES SHALL BE USED FOR EACH ASSEMBLY. THE UNITS ARE TO BE SHOP FABRICATED.

APPROVED:

DIVISION CHIEF, TRANSPORTATION ENGINEERING AND CONSTRUCTION

DIRECTOR, DEPARTMENT OF TRANSPORTATION

CITY OF BALTIMORE
DEPARTMENT OF TRANSPORTATION
TRANSPORTATION ENGINEERING AND CONSTRUCTION

ISSUED	REVISED	REVISED
8 / 2010		

LOAD TRANSFER ASSEMBLY CONTRACTION JOINTS

STANDARD NO.
BC 572.23

SCALE : NONE

SHEET 1 OF 1

APPROVED:

DIVISION CHIEF, TRANSPORTATION ENGINEERING AND CONSTRUCTION

DIRECTOR, DEPARTMENT OF TRANSPORTATION

CITY OF BALTIMORE
DEPARTMENT OF TRANSPORTATION
TRANSPORTATION ENGINEERING AND CONSTRUCTION

LOAD TRANSFER ASSEMBLY EXPANSION JOINTS

STANDARD NO. BC 572.24

SCALE : NONE

SHEET 1 OF 1

ISSUED	REVISED	REVISED
8 / 2010		

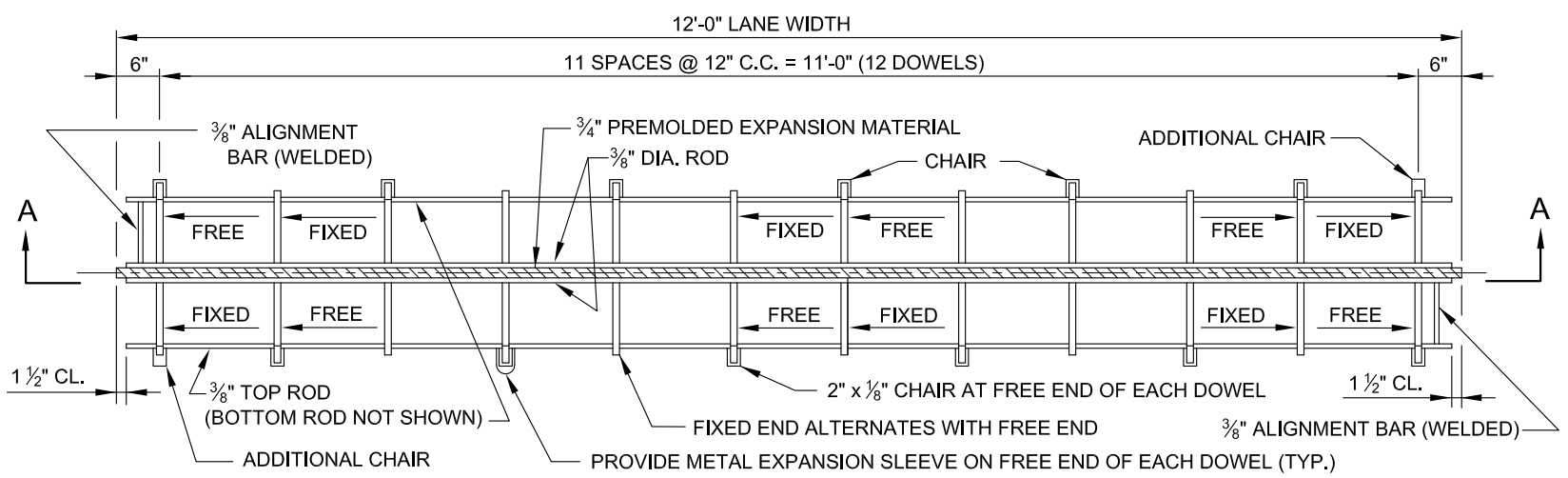

PLAN OF EXPANSION JOINT

NOTE:
LOAD TRANSFER ASSEMBLY EXPANSION JOINTS SHALL BE REQUIRED AT ALL P.C.'S ON THE MAIN LINE OR AT 400' INTERVALS OR WHERE AND AS DIRECTED BY THE ENGINEER.

NOTES: THE DIAMETERS OF ALL DOWELS SHALL BE AS SHOWN ON BC 572.21.
ANCHOR PINS SAME AS CONTRACTION JOINT ON BC 572.25.

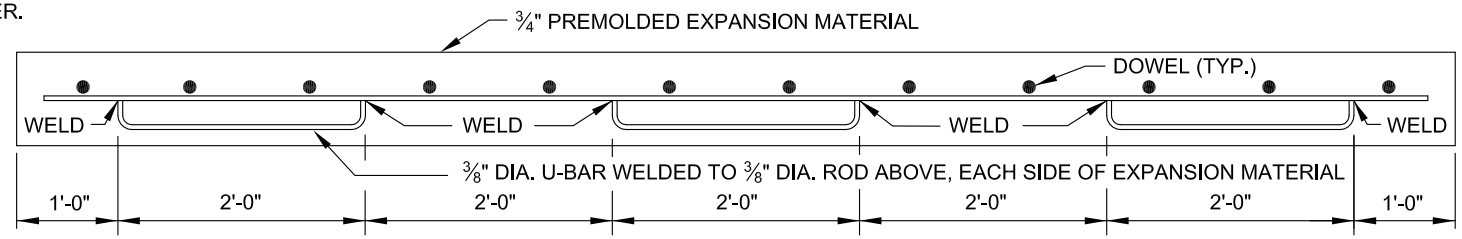

ELEVATION A-A SHOWING METHOD OF SUPPORTING EXPANSION MATERIAL

NOTES:
FREE END OF DOWEL BARS SHALL BE COATED AFTER INSTALLATION WITH GRAPHITE GREASE. SEE BC 572.21 FOR PAVEMENT THICKNESS AND THE REQUIRED DOWEL SIZES.

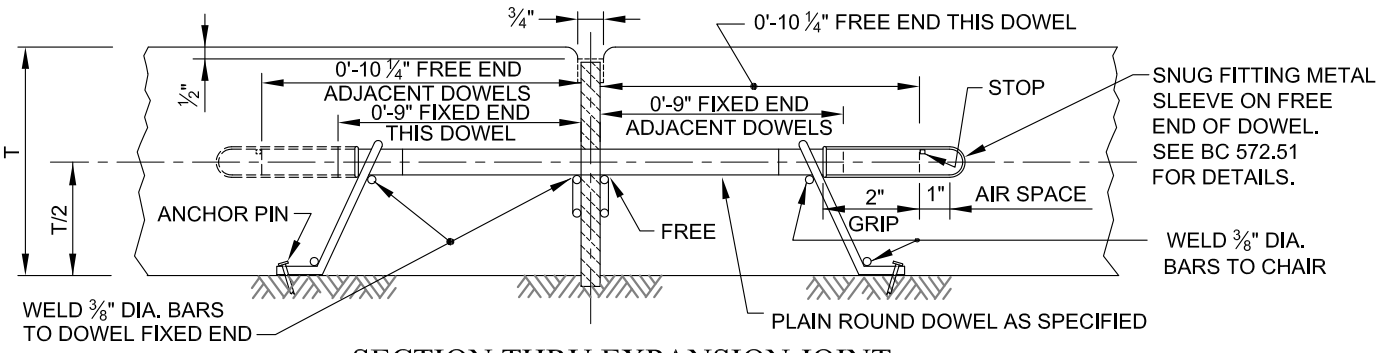

SECTION THRU EXPANSION JOINT

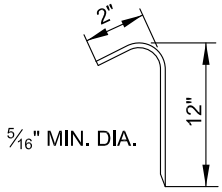

SPIKE DETAIL

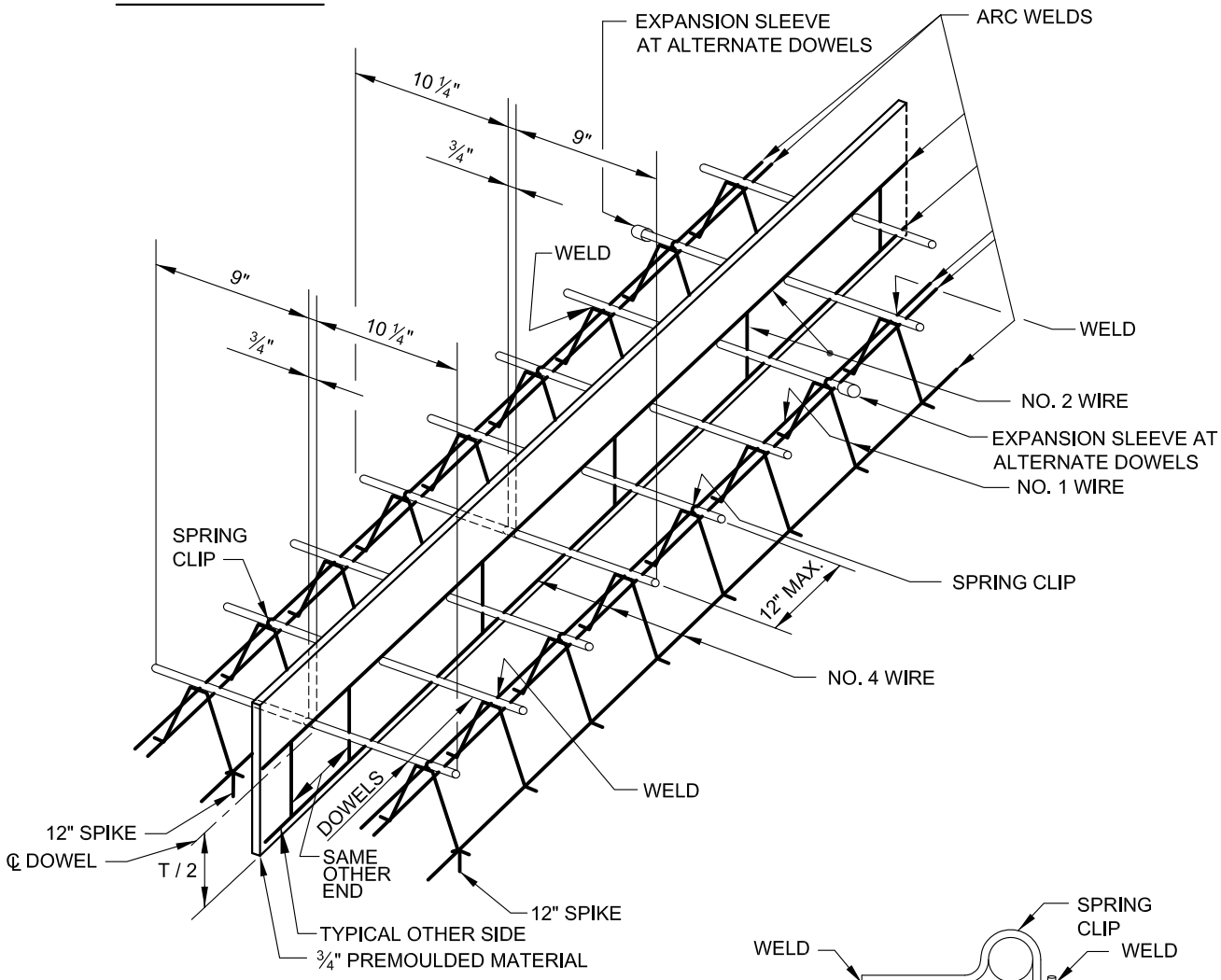

SPRING - CLIP DETAIL

NOTES:
SEE BC 572.21 FOR PAVEMENT THICKNESS AND THE REQUIRED DOWEL SIZES.

SPIKES TO BE PLACED 3 TO EACH SIDE, 6 PER DEVICE.

NOTE: LOAD TRANSFER ASSEMBLY EXPANSION JOINTS SHALL BE REQUIRED AT ALL P.C.'S ON THE MAIN LINE OR AT 400' INTERVALS OR WHERE AND AS DIRECTED BY THE ENGINEER.

APPROVED:

DIVISION CHIEF, TRANSPORTATION ENGINEERING AND CONSTRUCTION

DIRECTOR, DEPARTMENT OF TRANSPORTATION

CITY OF BALTIMORE
DEPARTMENT OF TRANSPORTATION
TRANSPORTATION ENGINEERING AND CONSTRUCTION

ISSUED	REVISED	REVISED
8 / 2010		

DOWEL WELD LOAD TRANSFER ASSEMBLY EXPANSION JOINTS

STANDARD NO.
BC 572.26

SCALE : NONE | SHEET 1 OF 1

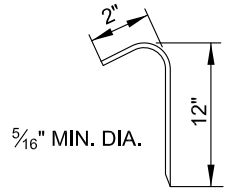

SPIKE DETAIL

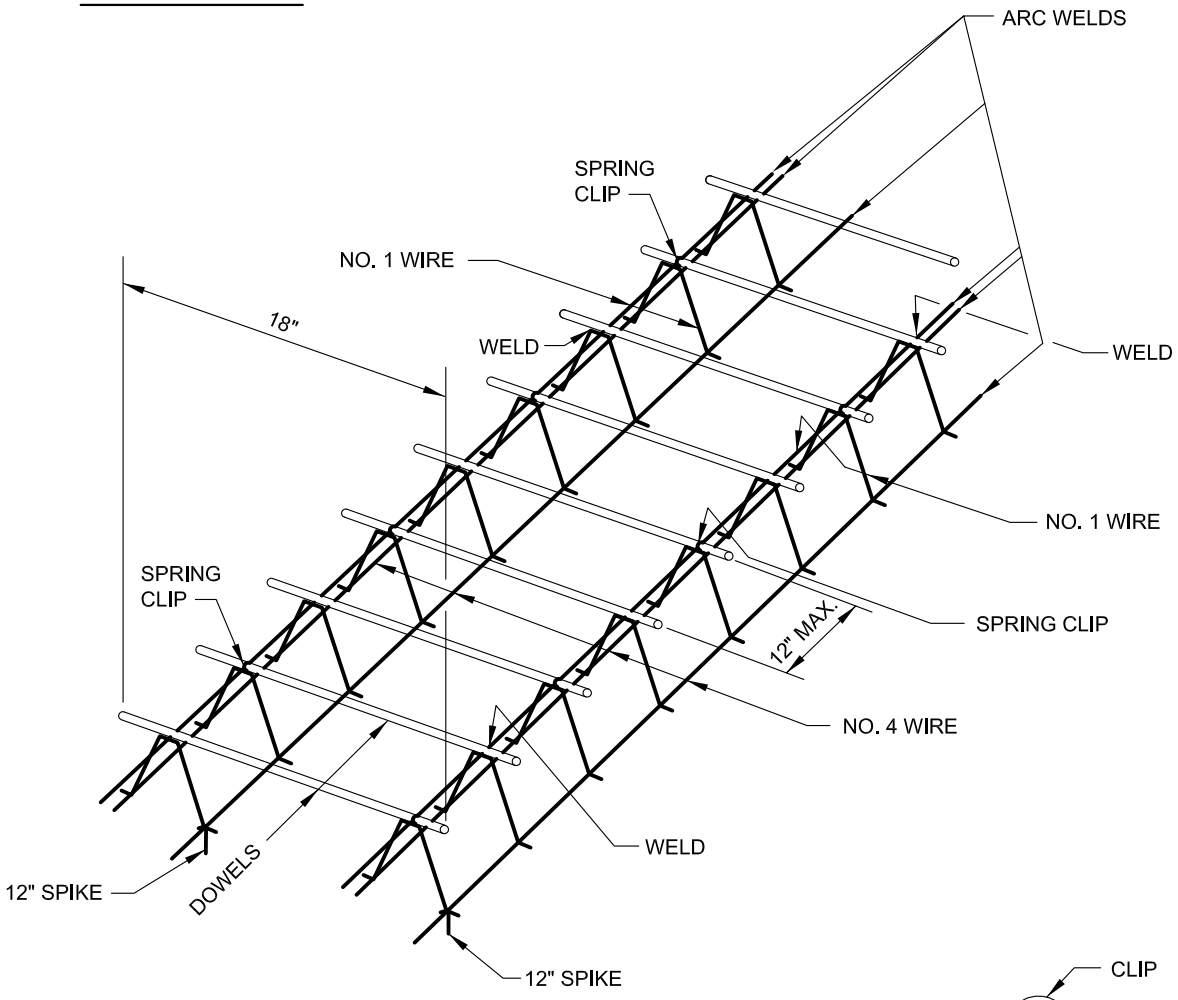

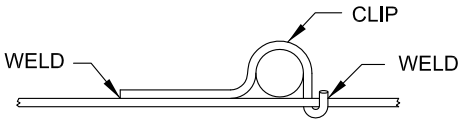

SPRING - CLIP DETAIL

NOTES:
SEE BC 572.21 FOR PAVEMENT THICKNESS AND THE REQUIRED DOWEL SIZES.

SPIKES TO BE PLACED 3 TO EACH SIDE, 6 PER DEVICE.

APPROVED:

DIVISION CHIEF, TRANSPORTATION ENGINEERING AND CONSTRUCTION

DIRECTOR, DEPARTMENT OF TRANSPORTATION

CITY OF BALTIMORE
DEPARTMENT OF TRANSPORTATION
TRANSPORTATION ENGINEERING AND CONSTRUCTION

ISSUED	REVISED	REVISED
8 / 2010		

DOWEL WELD
LOAD TRANSFER ASSEMBLY
CONTRACTION JOINTS

STANDARD NO.
BC 572.27

SCALE : NONE

SHEET 1 OF 1

APPROVED:

DIVISION CHIEF, TRANSPORTATION ENGINEERING AND CONSTRUCTION

DIRECTOR, DEPARTMENT OF TRANSPORTATION

CITY OF BALTIMORE
DEPARTMENT OF TRANSPORTATION
TRANSPORTATION ENGINEERING AND CONSTRUCTION

DOWEL ASSEMBLY EXPANSION JOINTS

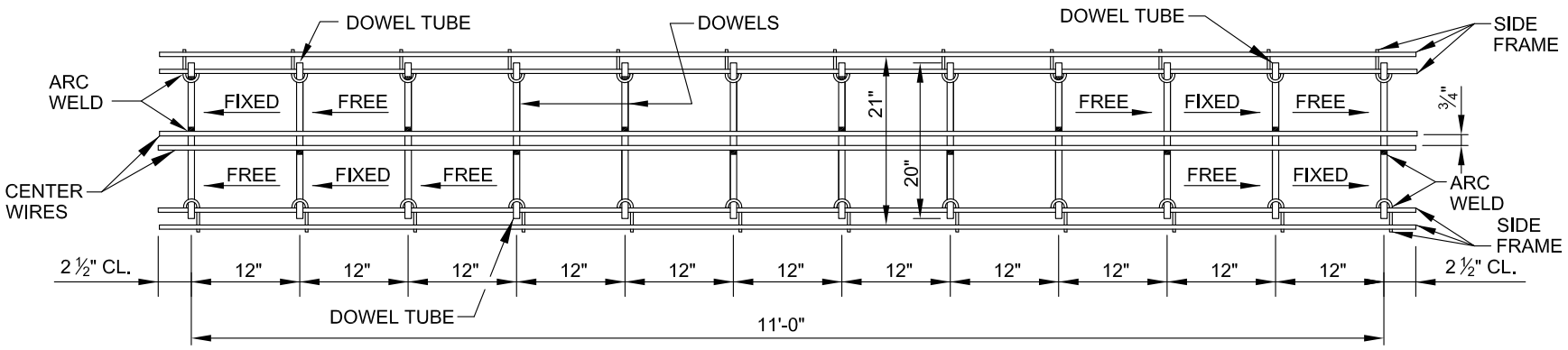

PLAN OF DOWEL UNIT FOR EXPANSION JOINT

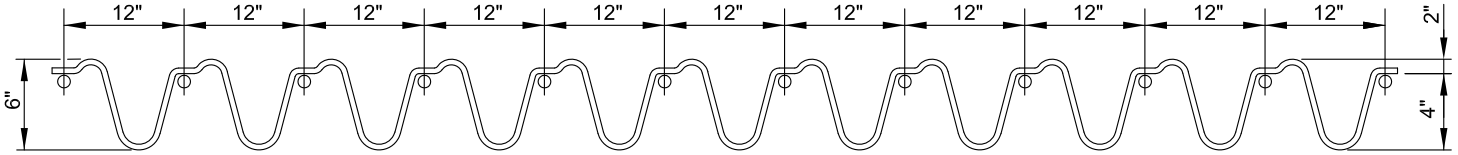

CENTER WIRE FOR EXPANSION JOINT

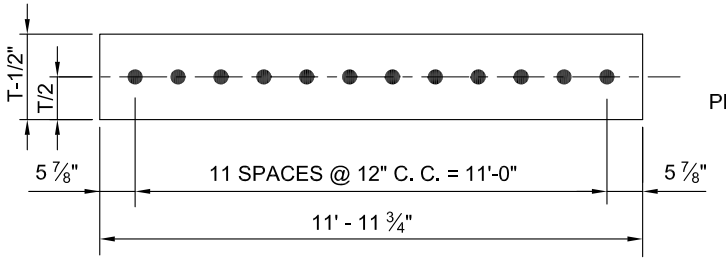

EXPANSION JOINT FILLER (3/4" THICK)

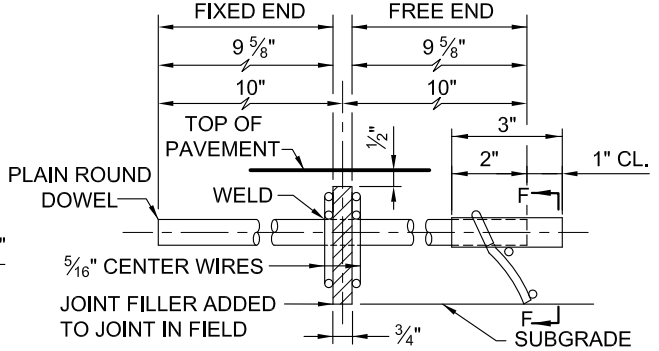

SECTION THRU EXPANSION JOINT

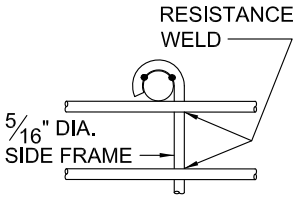

SECTION F-F

NOTES:

STAKING PINS TO BE A MIN. OF $\frac{5}{16}$" DIA. BARS. THE LONG END BEING 12" IN LENGTH AND POINTED, THE SHORT END WILL BE A MIN. OF 2" IN LENGTH. SEE BC 572.42 FOR DETAIL.

THE DIAMETER OF ALL DOWELS SHALL BE AS SHOWN ON BC 572.21.

NOTE:

LOAD TRANSFER ASSEMBLY EXPANSION JOINTS SHALL BE REQUIRED AT ALL P.C.'S ON THE MAIN LINE OR AT 400' INTERVALS OR WHERE AND AS DIRECTED BY THE ENGINEER.

ISSUED	REVISED	REVISED
8 / 2010		

STANDARD NO.
BC 572.41

SCALE : NONE

SHEET 1 OF 1

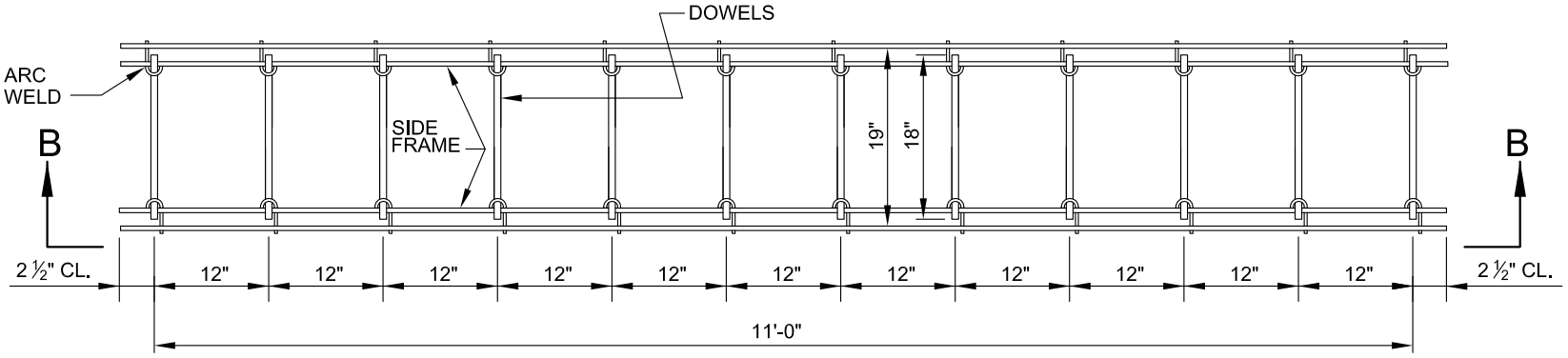

PLAN OF DOWEL UNIT FOR CONTRACTION JOINT

NOTES:

STAKING PINS TO BE A MIN. OF $\frac{5}{16}$" DIA. BARS. THE LONG END BEING 12" IN LENGTH AND POINTED, THE SHORT END WILL BE A MIN. OF 2" IN LENGTH.

T=PAVEMENT THICKNESS

THE DIAMETER OF ALL DOWELS SHALL BE AS SHOWN ON BC 572.21.

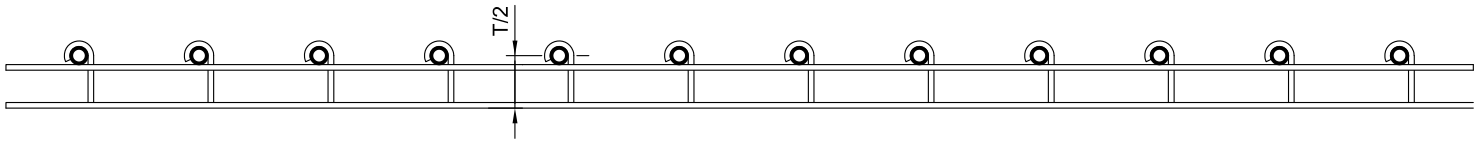

SECTION B-B

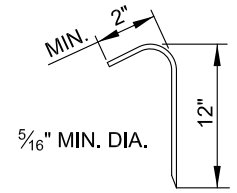

STAKING PIN DETAIL

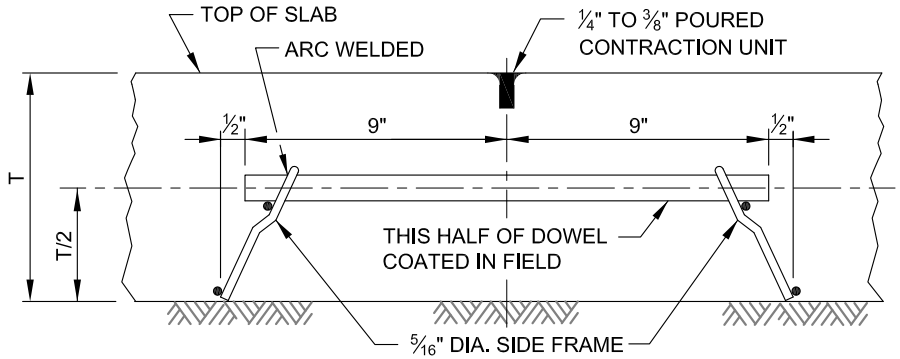

SECTION THRU CONTRACTION JOINT

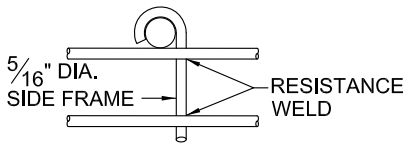

SIDE FRAME DETAIL

CITY OF BALTIMORE
DEPARTMENT OF TRANSPORTATION ENGINEERING AND CONSTRUCTION

APPROVED:

DIVISION CHIEF, TRANSPORTATION ENGINEERING AND CONSTRUCTION

DIRECTOR, DEPARTMENT OF TRANSPORTATION

DOWEL ASSEMBLY CONTRACTION JOINTS

STANDARD NO. BC 572.42

ISSUED	REVISED	REVISED
8 / 2010		

SCALE : NONE

SHEET 1 OF 1

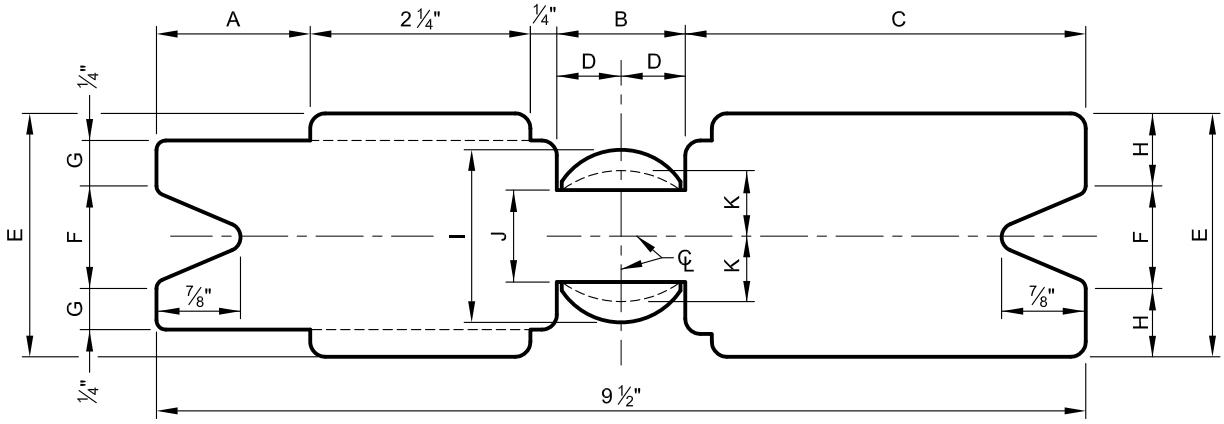

BLANK FOR DOWEL TUBE

MATERIAL 23 GA. (0.025 THICK) STEEL

DIAM.	A	B	C	D	E	F	G	H	I	J	K
1 ¼"	1 19/32"	1 5/16"	4 3/32"	21/32"	2 ½"	7/8"	9/16"	13/16"	1 ¾"	7/8"	21/32"
1"	1 11/16"	1 ⅛"	4 3/16"	9/16"	2 3/16"	¾"	15/32"	23/32"	1 9/16"	⅝"	9/16"

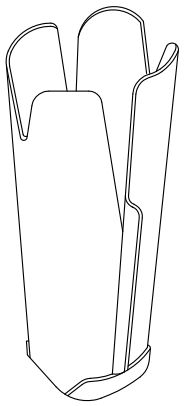

TUBE FOLDED FOR USE

APPROVED:

DIVISION CHIEF, TRANSPORTATION ENGINEERING AND CONSTRUCTION

DIRECTOR, DEPARTMENT OF TRANSPORTATION

CITY OF BALTIMORE
DEPARTMENT OF TRANSPORTATION
TRANSPORTATION ENGINEERING AND CONSTRUCTION

ISSUED	REVISED	REVISED
8 / 2010		

DOWEL TUBE EXPANSION JOINT ASSEMBLY

STANDARD NO.
BC 572.43

SCALE : NONE

SHEET 1 OF 1

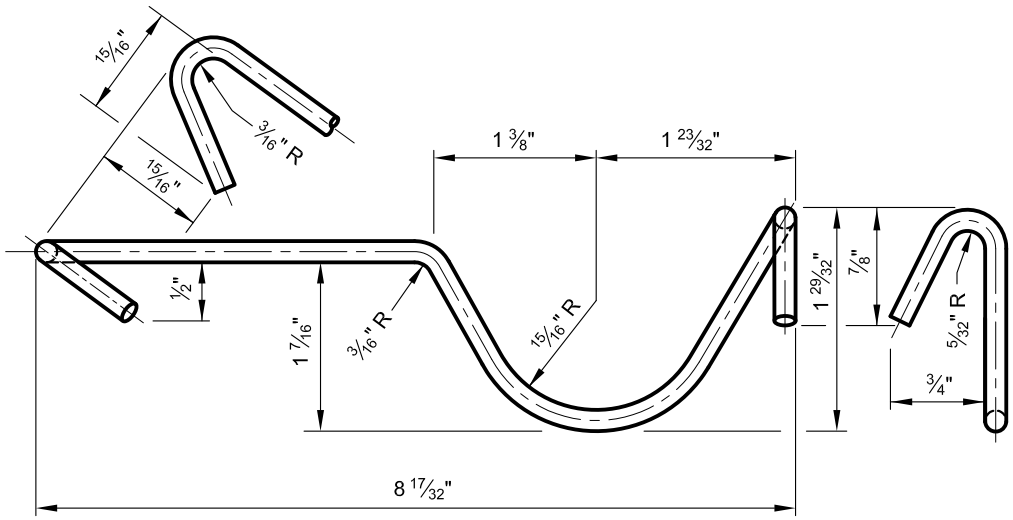

MATERIAL: #6 GA. SPRING WIRE

APPROX. STOCK LENGTH = 10 ¼"

APPROX. WT. PER PIECE = 0.084 LBS.

APPROVED:

DIVISION CHIEF, TRANSPORTATION ENGINEERING AND CONSTRUCTION

DIRECTOR, DEPARTMENT OF TRANSPORTATION

CITY OF BALTIMORE
DEPARTMENT OF TRANSPORTATION
TRANSPORTATION ENGINEERING AND CONSTRUCTION

ISSUED	REVISED	REVISED
8 / 2010		

DOWEL BAR KEEPER

STANDARD NO.
BC 572.44

SCALE : NONE

SHEET 1 OF 1

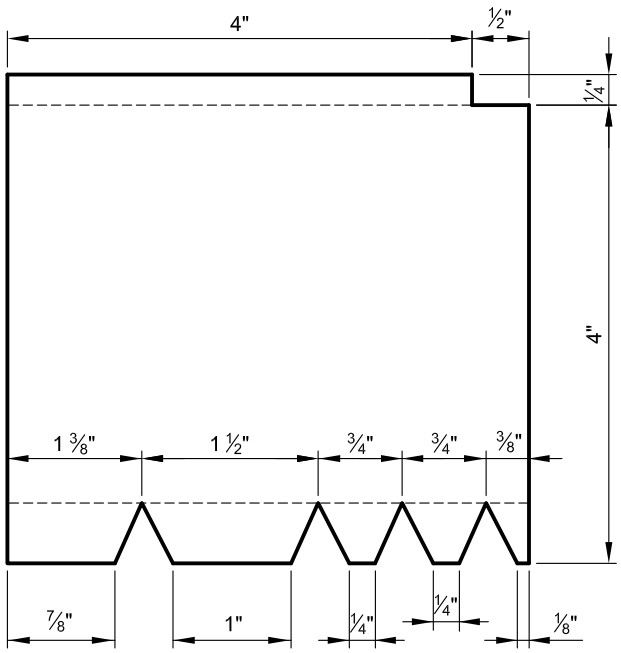

BLANK FOR DOWEL SLEEVE

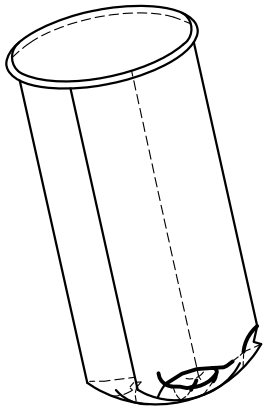

SLEEVE FORMED FOR USE

CITY OF BALTIMORE 1797

APPROVED:

DIVISION CHIEF, TRANSPORTATION ENGINEERING AND CONSTRUCTION

DIRECTOR, DEPARTMENT OF TRANSPORTATION

CITY OF BALTIMORE
DEPARTMENT OF TRANSPORTATION
TRANSPORTATION ENGINEERING AND CONSTRUCTION

DOWEL SLEEVE EXPANSION JOINT ASSEMBLY

ISSUED	REVISED	REVISED
8 / 2010		

STANDARD NO.
BC 572.51

SCALE : NONE

SHEET 1 OF 1

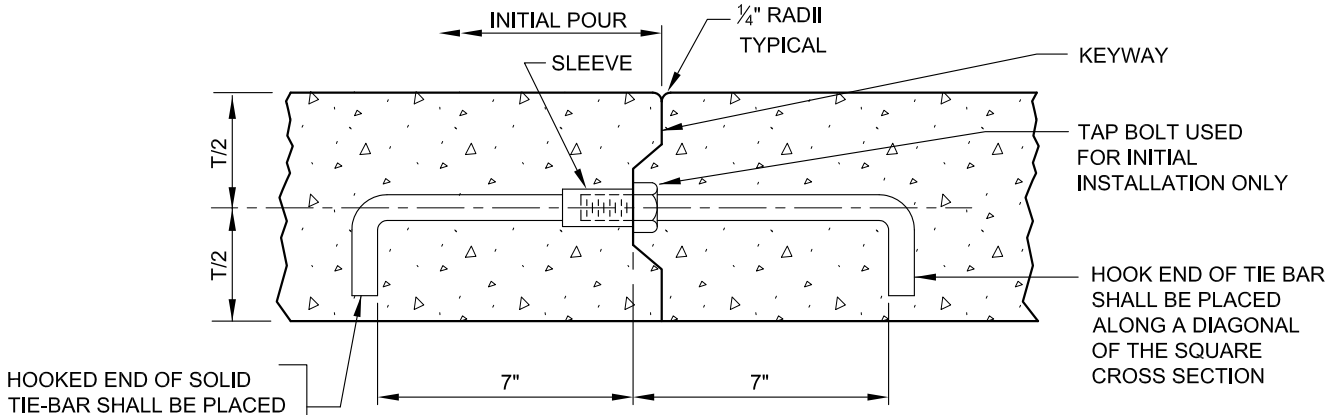

LONGITUDINAL TIE DEVICE - TYPE 'A'

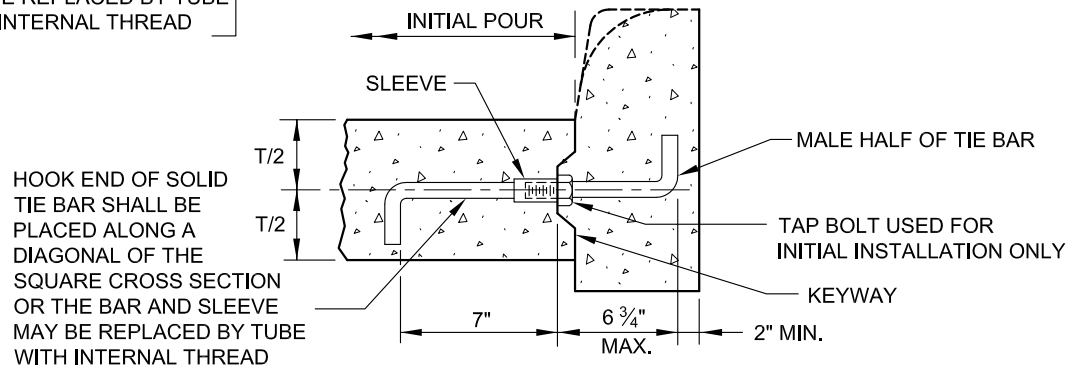

LONGITUDINAL TIE DEVICE - TYPE 'A' MODIFIED

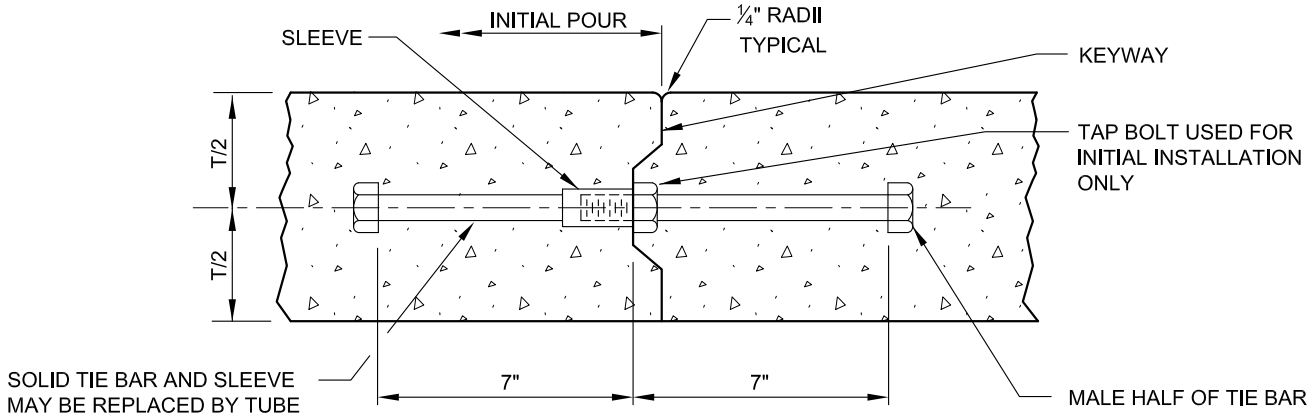

LONGITUDINAL TIE DEVICE - TYPE 'B'

MATERIAL

MALLEABLE IRON OR STEEL. SEE SPECS. OR SPECIAL PROVISIONS FOR TOTAL STRENGTH REQUIREMENTS

GENERAL NOTES

ANY SIMILAR DEVICE MAY BE SUBMITTED FOR CONSIDERATION OF THE ENGINEER. IF THE GENERAL TYPE OF A SUBSTITUTION IS APPROVED, THE DEVICE MUST STILL MEET THE STRENGTH REQUIREMENTS APPEARING IN THE SPECIFICATIONS OR SPECIAL PROVISIONS.

THE PORTION OF THE DEVICE INITIALLY INSTALLED MUST BE HELD FIRMLY IN PLACE BY TAP-BOLTS INSERTED THROUGH DRILLED HOLES. IF HOLES IN THE FORMS HAVE BEEN FORMED BY ANY OTHER METHOD THAN DRILLING, THEN STEEL WASHERS MUST BE USED, IN ADDITION TO THE TAP-BOLTS, AS DIRECTED BY THE ENGINEER.

TIE-BAR DEVICE TO BE CENTERED IN KEYWAY, SEE BC 572.92-2 FOR KEYWAY SECTION.

APPROVED:

DIVISION CHIEF, TRANSPORTATION ENGINEERING AND CONSTRUCTION

DIRECTOR, DEPARTMENT OF TRANSPORTATION

CITY OF BALTIMORE
DEPARTMENT OF TRANSPORTATION
TRANSPORTATION ENGINEERING AND CONSTRUCTION

ISSUED	REVISED	REVISED
8 / 2010		

LONGITUDINAL TIE DEVICES

STANDARD NO.
BC 572.61-1

SCALE : NONE

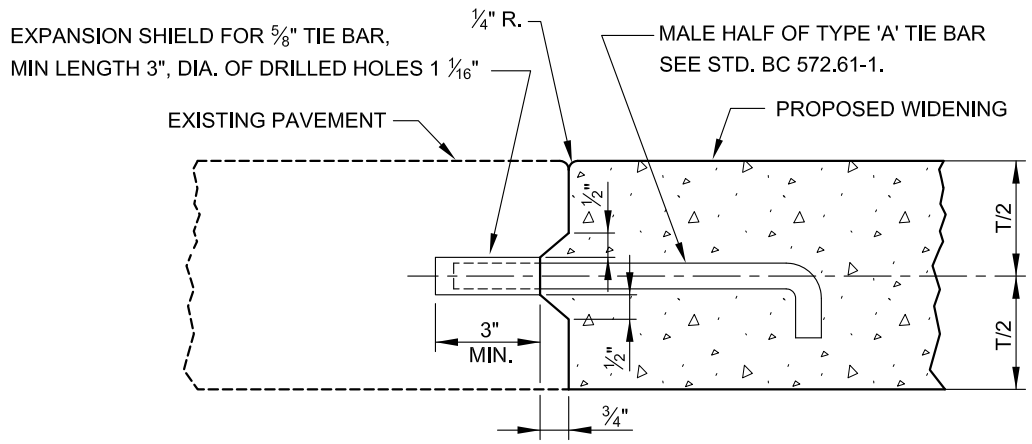

NOTE: THE TIE DEVICE TO BE PLACED 4' C.C. ALONG THE EDGE OF EXISTING PAVEMENT OR AS INDICATED ON THE PLANS OR WHERE AND IF DIRECTED BY THE ENGINEER.

APPROVED :

DIVISION CHIEF, TRANSPORTATION ENGINEERING AND CONSTRUCTION

DIRECTOR, DEPARTMENT OF TRANSPORTATION

CITY OF BALTIMORE
DEPARTMENT OF TRANSPORTATION
TRANSPORTATION ENGINEERING AND CONSTRUCTION

SPECIAL LONGITUDINAL TIE DEVICE

ISSUED	REVISED	REVISED
8 / 2010		

STANDARD NO.
BC 572.61-2

SCALE : NONE

SHEET 2 OF 2

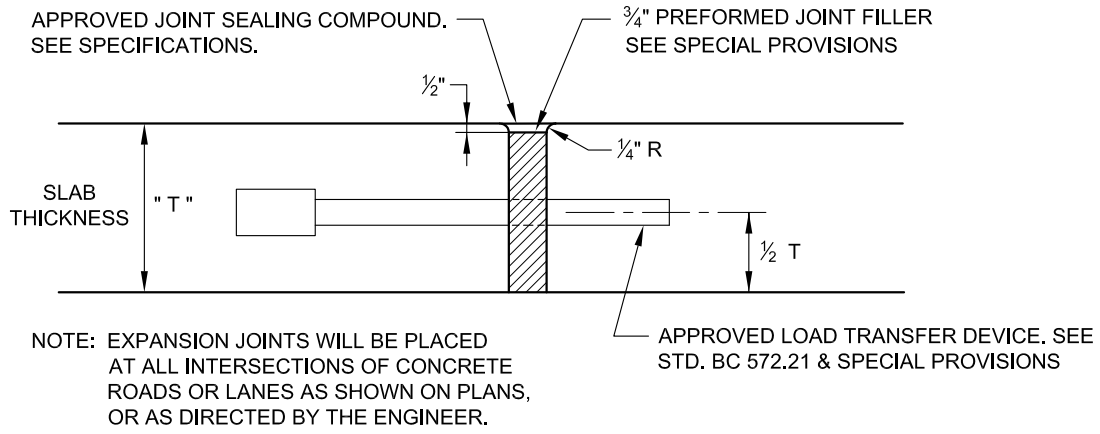

NOTE: EXPANSION JOINTS WILL BE PLACED AT ALL INTERSECTIONS OF CONCRETE ROADS OR LANES AS SHOWN ON PLANS, OR AS DIRECTED BY THE ENGINEER.

EXPANSION JOINT

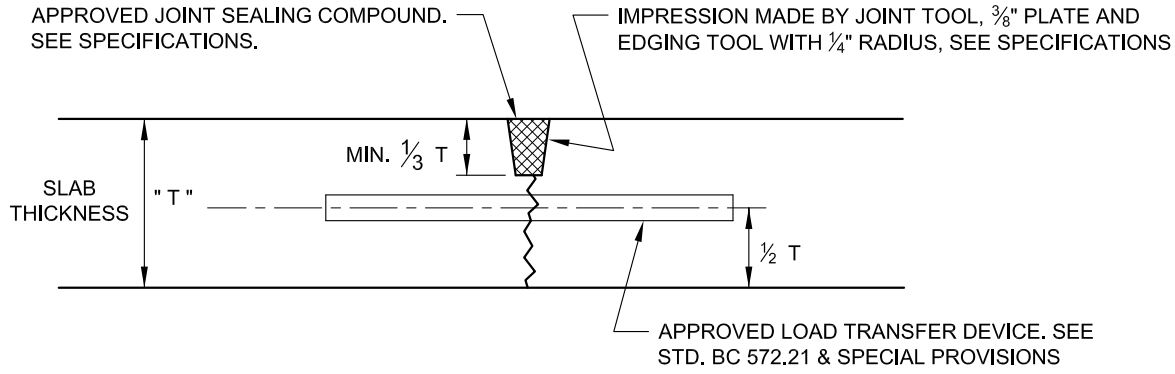

TOOLED CONTRACTION JOINT

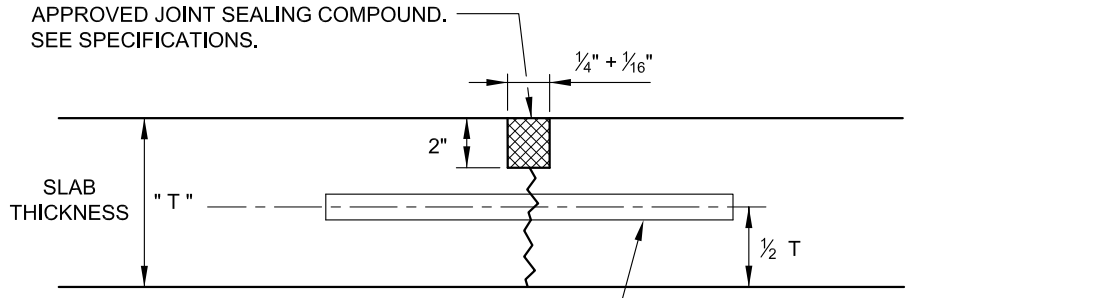

NOTE: SAWED JOINTS ARE NOT PERMITTED WHEN GRAVEL AGGREGATE IS USED.

SAWED CONTRACTION JOINT

APPROVED:

DIVISION CHIEF, TRANSPORTATION ENGINEERING AND CONSTRUCTION

DIRECTOR, DEPARTMENT OF TRANSPORTATION

CITY OF BALTIMORE
DEPARTMENT OF TRANSPORTATION
TRANSPORTATION ENGINEERING AND CONSTRUCTION

TYPES OF JOINTS
CEMENT CONCRETE
PAVEMENT

ISSUED	REVISED	REVISED
8 / 2010		

STANDARD NO.
BC 572.92-1

SCALE : NONE

SHEET 1 OF 2

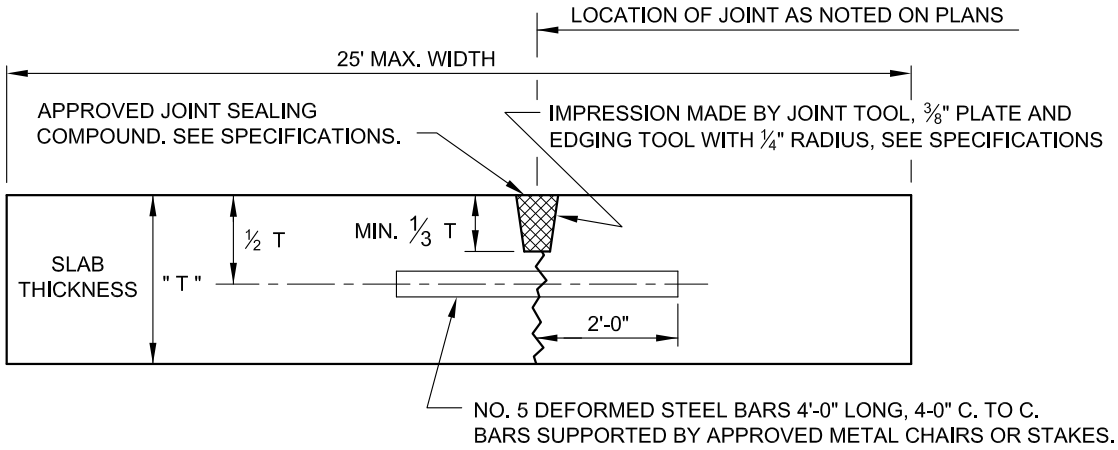

TOOLED LONGITUDINAL CONSTRUCTION JOINT

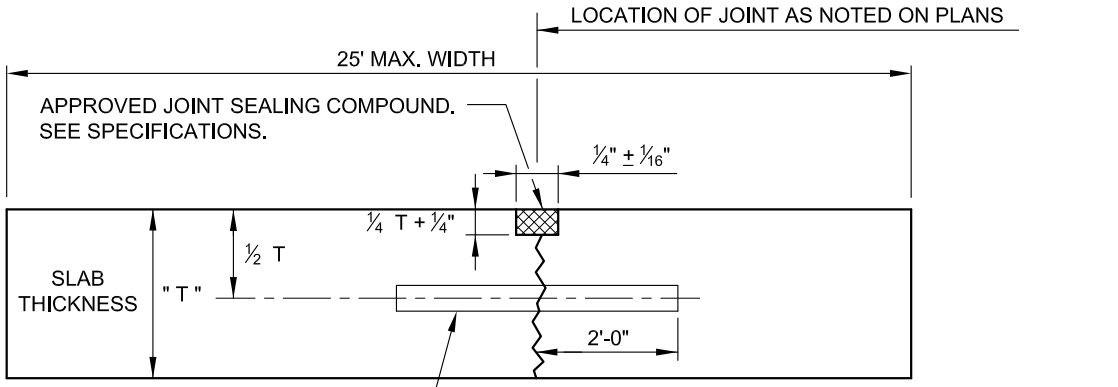

NOTE: SAWED JOINTS ARE NOT PERMITTED WHEN GRAVEL AGGREGATE IS USED.

SAWED LONGITUDINAL CONSTRUCTION JOINT

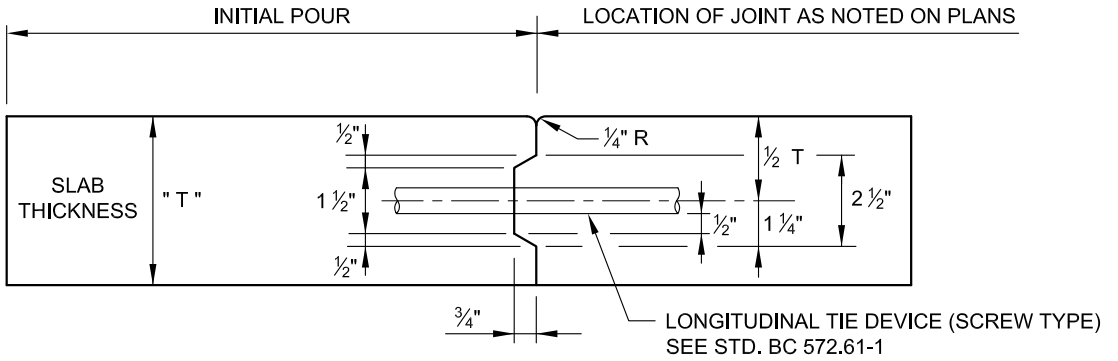

LONGITUDINAL CONSTRUCTION JOINT

APPROVED:

DIVISION CHIEF, TRANSPORTATION ENGINEERING AND CONSTRUCTION

DIRECTOR, DEPARTMENT OF TRANSPORTATION

CITY OF BALTIMORE
DEPARTMENT OF TRANSPORTATION
TRANSPORTATION ENGINEERING AND CONSTRUCTION

TYPES OF JOINTS
CEMENT CONCRETE PAVEMENT

ISSUED	REVISED	REVISED
8 / 2010		

STANDARD NO.
BC 572.92-2

SCALE : NONE

SHEET 2 OF 2

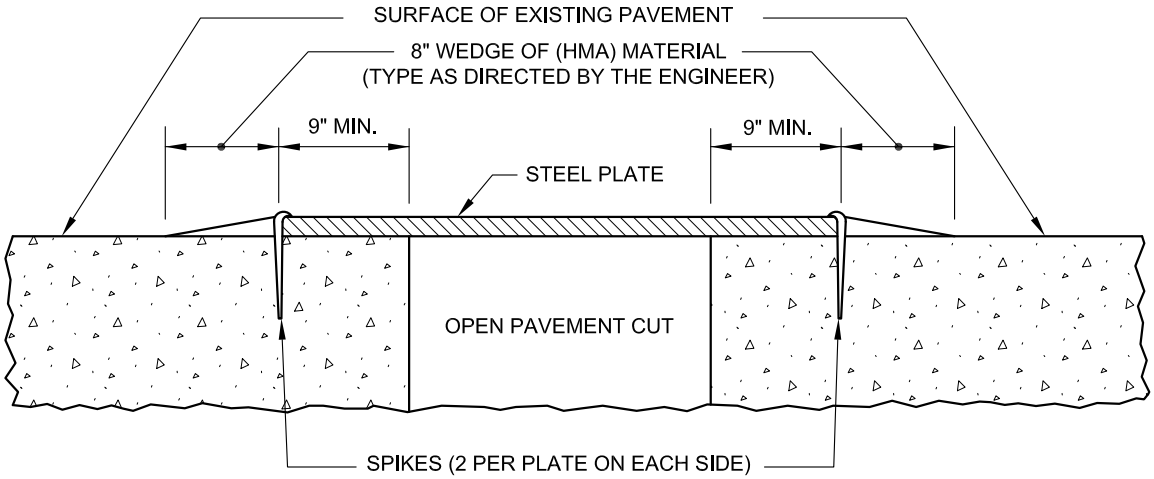

NOTES: 1. PLACE STEEL PLATE ON SURFACE OF EXISTING PAVEMENT.

2. SPIKES TO BE DRILLED IN CONCRETE BASE

3. SPIKES AND HOT MIX ASPHALT (HMA) TO BE PLACED ONLY WHERE MAINTENANCE OF TRAFFIC IS REQUIRED. WELDING MAY BE CONSIDERED FOR CONTINUOUS PLATING.

APPROVED:

DIVISION CHIEF, TRANSPORTATION ENGINEERING AND CONSTRUCTION

DIRECTOR, DEPARTMENT OF TRANSPORTATION

CITY OF BALTIMORE
DEPARTMENT OF TRANSPORTATION
TRANSPORTATION ENGINEERING AND CONSTRUCTION

STREET CUT AND REPAIR TEMPORARY STEEL PLATE

ISSUED	REVISED	REVISED
8 / 2010		

STANDARD NO.
BC 576.17-1

SCALE : NONE

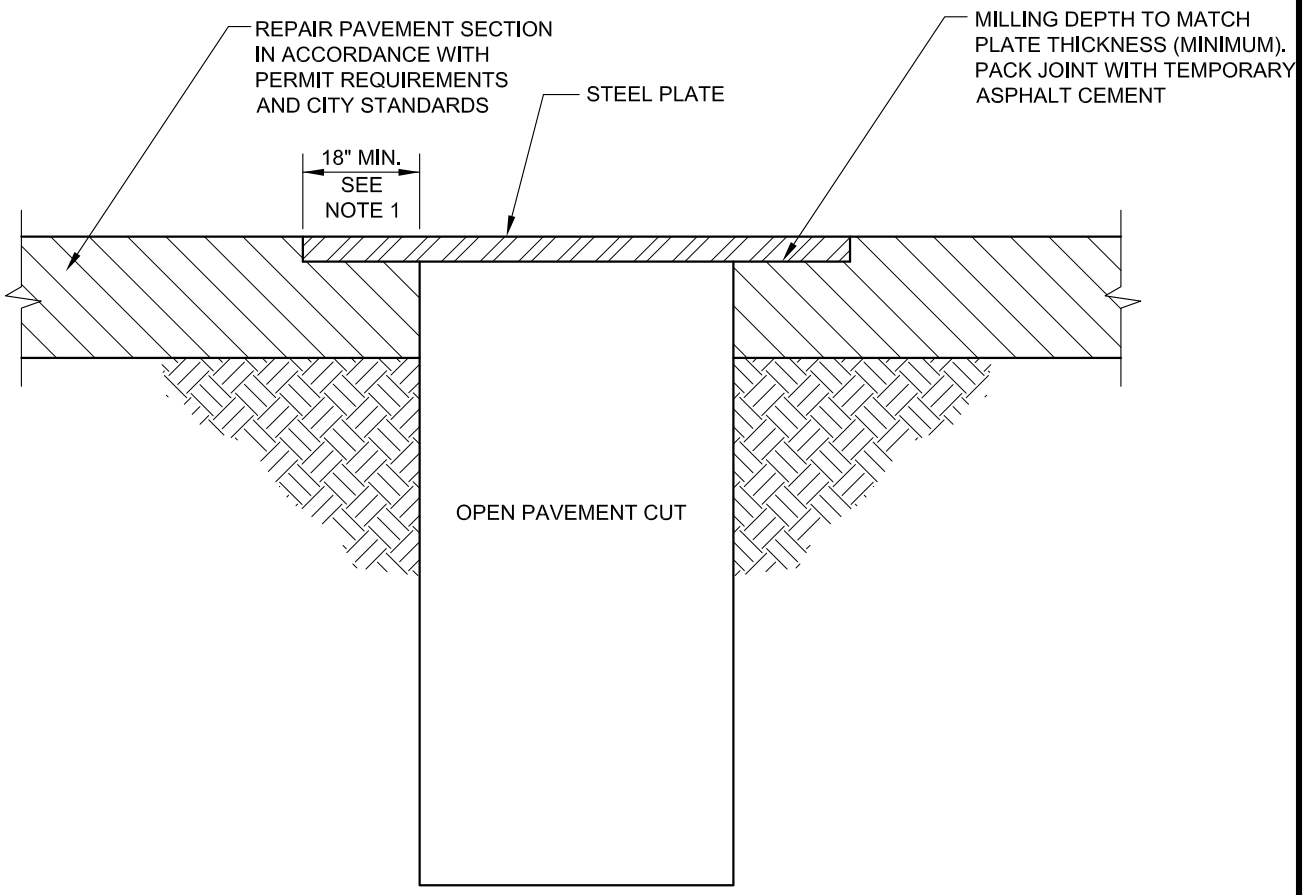

TYPICAL TRENCH PLATE DETAIL
N.T.S.

NOTE:

1. THE CONTRACTOR SHALL PROVIDE A MINIMUM 18" LAP OF STEEL PLATE ON EACH SIDE OF TRENCH TO ASSURE NO SLIPPING OF PLATE OR COLLAPSING OF TRENCH WALL. WHERE 18" LAP CANNOT BE MET, ENGINEERING DESIGN IS REQUIRED AND SHALL BE APPROVED BY THE CITY ENGINEER.

2. STEEL PLATE MUST FIT SNUG WITHIN THE RECESSED AREA AND INSTALLED TO OPERATE WITH MINIMUM NOISE.

3. THE PAVEMENT SHALL BE COLD PLANNED TO A DEPTH EQUAL TO THE THICKNESS OF THE PLATE, AND TO A WIDTH AND LENGTH EQUAL TO THE THICKNESS OF THE PLATE, AND TO OPERATE WITH MINIMUM NOISE.

4. THIS STANDARD SHALL BE IMPLEMENTED ON ALL PROJECTS WITHIN THE VEHICULAR TRAVELWAY ANTICIPATED TO BE OPEN MORE THAN 30 DAYS UNLESS OTHERWISE APPROVED BY THE CITY ENGINEER.

5. MULTIPLE PLATES MUST BE TACK WELDED AS NEEDED TO SECURE PLATES, 6" MINIMUM.

6. ALL PLATES MUST MEET REQUIRED TRAFFIC LOADS, AND BE SKID-RESISTANT. THE CONTRACTOR SHALL BE RESPONSIBLE FOR THE APPROPRIATE SELECTION AND MAINTENANCE OF THE STEEL PLATES.

7. ALL PLATES MUST MEET ADA STANDARDS FOR COEFICIENT OF FRICTION: FLAT PLATE =0.60, INCLINED PLATE = 0.80 USING ASTM STD. 1679 .

8. STEEL PLATES MUST BE REMOVED AND PERMANENT PAVEMENT SHALL BE PLACED WITHIN FIFTEEN (15) WORKING DAYS OR AS APPROVED BY THE CITY ENGINEER.

9. THE CONTRACTOR MAY BE REQUIRED TO PLACE "STEEL PLATES AHEAD" SIGNS.

CITY OF BALTIMORE 1797	APPROVED : Bimal Devaghi DIVISION CHIEF, TRANSPORTATION ENGINEERING AND CONSTRUCTION Khalil Zaid DIRECTOR, DEPARTMENT OF TRANSPORTATION	CITY OF BALTIMORE DEPARTMENT OF TRANSPORTATION TRANSPORTATION ENGINEERING AND CONSTRUCTION	ISSUED 8 / 2010	REVISED	REVISED
		STREET CUT AND REPAIR RECESSED TEMPORARY STEEL PLATE	STANDARD NO. BC 576.17-2		
			SCALE : NONE	SHEET 2 OF 2	

CONSTRUCTION NOTES AND REQUIREMENTS

THE FOLLOWING NOTES ARE APPLICABLE TO THE REPAIR OF TRENCHES IN EXISTING PLAIN CEMENT CONCRETE PAVEMENT AND REINFORCED CONCRETE PAVEMENT.

REMOVE EXISTING PAVEMENT:

LONGITUDINAL TRENCHES:
REMOVE EXISTING PAVEMENT FOR FULL WIDTH OF SLAB BETWEEN JOINTS.

TRANSVERSE TRENCHS:
REMOVE EXISTING PAVEMENT FOR THE ENTIRE WIDTH OF SLAB AND FOR A LENGTH IN ACCORDANCE WITH THE FOLLOWING LIMITATIONS:

A. MINIMUM LENGTH OF PAVEMENT REMOVAL SHALL BE 12 FEET (20 FEET FOR REINFORCED CONCRETE PAVEMENT).

B. ONLY TWO TRANSVERSE CUTS MAY BE MADE IN ANY ONE SLAB BETWEEN EXISTING TRANSVERSE JOINTS.

C. A TRANSVERSE CUT SHALL NOT BE CLOSER THAN 12 FEET (20 FEET FOR REINFORCED CONCRETE PAVEMENT) TO AN EXISTING TRANSVERSE JOINT OR CLOSER THAN 2 FEET TO THE EDGE OF TRENCH.

ALL PAVEMENT CUTS SHALL BE MADE WITH A SAW CUT 3 INCHES DEEP BEFORE BREAKING OUT EXISTING CONCRETE. SALVAGE LONGITUDINAL AND TRANSVERSE TIE BASE WHERE PAVEMENT IS REMOVED TO AN EXISTING JOINT.

PAVEMENT REPLACEMENT:

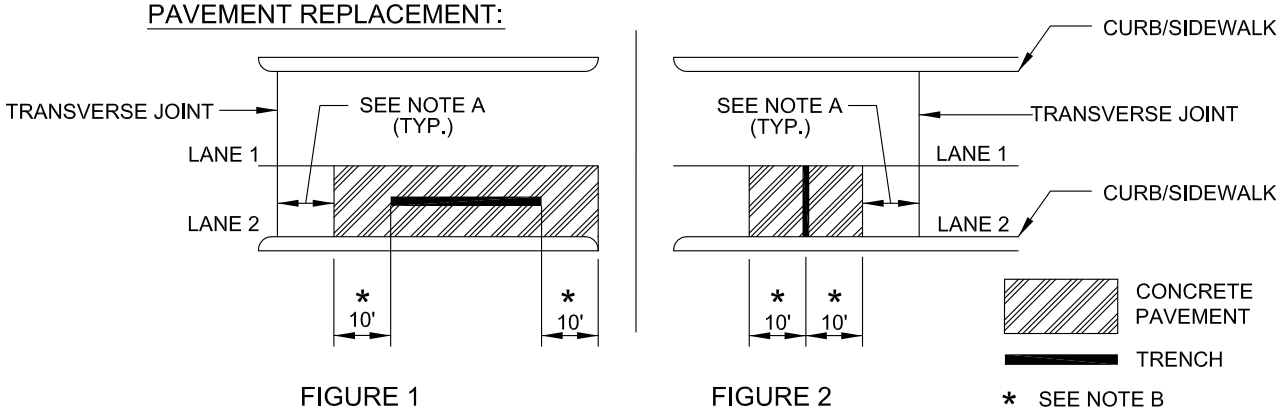

FIGURE 1 — LONGITUDINAL TRENCH

FIGURE 2 — TRANSVERSE TRENCH

NOTES:

A. IF THIS REPAIR ENDS WITHIN 12 FT. OF A TRANSVERSE JOINT IN PLAIN CEMENT CONCRETE PAVEMENT OR WITHIN 20 FEET OF A TRAVERSE JOINT IN REINFORCED CONCRETE PAVEMENT THE REPAIR SHALL BE EXTENDED TO THE JOINT.

B. IF A TRANSVERSE JOINT OCCURS WITHIN THIS REPAIR AREA THE REPAIR SHALL END AT THE TRANSVERSE JOINT.

THE FULL DEPTH PATCH SHALL BE IN ACCORDANCE WITH THE FOLLOWING:

LONGITUDINAL TRENCHES:
REMOVE THE EXISTING PAVEMENT FOR THE ENTIRE TRAFFIC LANE WIDTH WHERE THE TRENCH IS LOCATED. REMOVE AN ADDITIONAL TEN FEET OF PAVEMENT AT THE BEGINNING AND END OF THE TRENCH. SEE FIGURE 1 ABOVE.

TRANSVERSE TRENCH:
REMOVE THE PAVEMENT 10' ON EACH SIDE OF THE TRENCH FOR THE ENTIRE WIDTH OF THE AFFECTED TRAFFIC LANE. SEE FIGURE 2 ABOVE.

ALL PAVEMENT CUTS SHALL BE MADE WITH A SAW CUT 3 INCHES DEEP INTO CONCRETE PAVEMENT BEFORE BREAKING OUT EXISTING CONCRETE. SALVAGE LONGITUDINAL AND TRANSVERSE TIE BARS WHERE PAVEMENT IS REMOVED TO AN EXISTING JOINT

PLACEMENT OF CONCRETE PAVEMENT MUST BE COMPLETE WITHIN 7 DAYS AFTER THE COMPLETION OF BACK FILL AND COMPACTION.

CITY OF BALTIMORE 1797	APPROVED: DIVISION CHIEF, TRANSPORTATION ENGINEERING AND CONSTRUCTION; DIRECTOR, DEPARTMENT OF TRANSPORTATION	CITY OF BALTIMORE DEPARTMENT OF TRANSPORTATION TRANSPORTATION ENGINEERING AND CONSTRUCTION	ISSUED	REVISED	REVISED
			8 / 2010		
		STREET CUT AND REPAIR RIGID PAVEMENT	STANDARD NO. BC 576.18-1		
			SCALE : NONE	SHEET 1 OF 2	

PAVEMENT REPLACEMENT (CONTINUES):

THE TOP 6 INCHES OF THE TRENCH SHALL BE FILLED WITH COMPACTED SUBBASE (6 INCHES CRUSHER RUN AGGREGATE CR-6), ADDITIONAL THICKNESS, IF REQUIRED, SHALL BE IN ACCORDANCE WITH THE PLANS OR AS DIRECTED BY THE ENGINEER. SEE SECTION 32 -11-23.10 IN SPECIFICATIONS. CLEAN AND WET EDGES OF EXISTING PAVEMENT AND COMPACT AND DAMPEN SUBBASE OF ENTIRE OPENING BEFORE PLACING CONCRETE. AT EXISTING JOINTS, REPLACE 3/4 INCH EXPANSION MATERIAL, EXPANSION SLEEVES OR COMPLETE EXPANSION AND CONTRACTION JOINTS ASSEMBLIES AS REQUIRED BEFORE PLACING CONCRETE. AT PAVEMENT CUTS, DRILL HOLE AND INSTALL ½ OF LONGITUDINAL TIE DEVICE AS DIRECTED BY THE ENGINEER AND IN ACCORDANCE WITH STANDARD BC 572.61-2 REPLACE CONCRETE USING MODIFIED MIX NO. 6 CONCRETE CAPABLE OF ACHIEVING 2500 PSI WITHIN 12 HOURS. SEE SECTION 32-01-30.10, 3.6. B.2.b IN SPECIFICATIONS.

STEEL BARS ARE REQUIRED WHERE EXISTING PAVEMENT IS REINFORCED. COST OF MATERIAL AND PLACING STEEL BARS TO BE INCLUDED IN UNIT PRICE BID FOR PATCHING EXISTING PAVEMENT ITEMS.

GENERAL NOTES:

ALL WORK TO BE PERFORMED IN ACCORDANCE WITH THE LATEST DEPARTMENT OF GENERAL SERVICES (DGS) STANDARD SPECIFICATIONS. THE ABOVE REQUIREMENTS ARE APPLICABLE TO ALL TYPES OF UTILITY REPAIR IN RIGID PAVEMENT. INTERMITTENT UTILITY CUTS WILL NOT BE PERMITTED. PROCEDURE FOR MAINTENANCE OF TRAFFIC SHALL BE APPROVED BY THE DEPARTMENT OF TRANSPORTATION (DOT) BEFORE ANY EXISTING PAVEMENT IS REMOVED.

CITY OF BALTIMORE 1797	APPROVED: Bimal Devkota DIVISION CHIEF, TRANSPORTATION ENGINEERING AND CONSTRUCTION Khalil Zaid DIRECTOR, DEPARTMENT OF TRANSPORTATION	CITY OF BALTIMORE DEPARTMENT OF TRANSPORTATION TRANSPORTATION ENGINEERING AND CONSTRUCTION	ISSUED 8 / 2010	REVISED	REVISED
		STREET CUT AND REPAIR RIGID PAVEMENT	STANDARD NO. BC 576.18-2		
			SCALE : NONE	SHEET 2 OF 2	

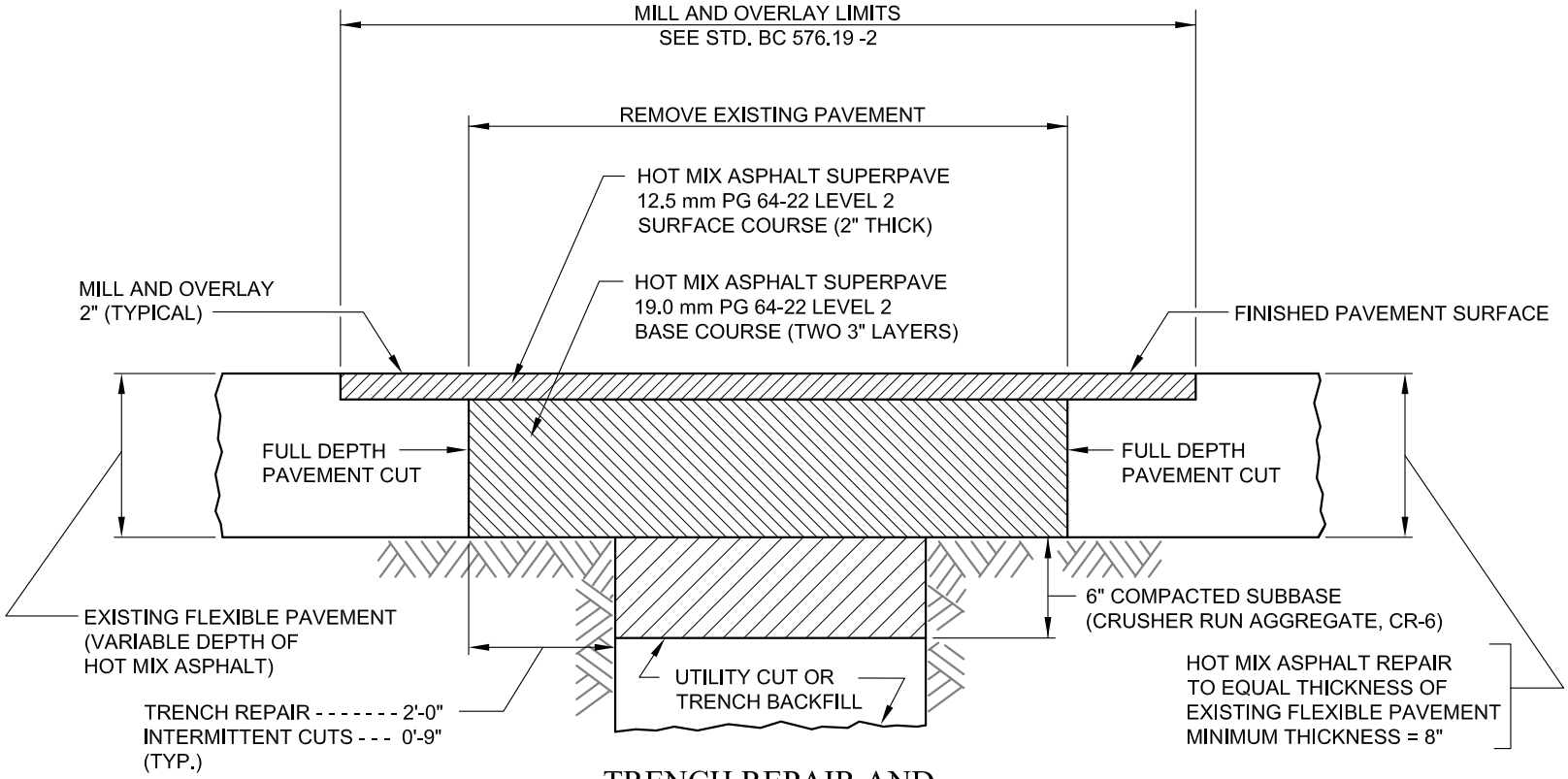

TRENCH REPAIR AND INTERMITTENT UTILITY CUTS

THIS DETAIL IS APPLICABLE TO THE REPAIR OF TRENCHES AND INTERMITTENT UTILITY CUTS IN EXISTING FULL DEPTH FLEXIBLE PAVEMENT.

SEE STANDARD BC 576.19-2
FOR CONSTRUCTION NOTES AND OTHER REQUIREMENTS.

APPROVED:

DIVISION CHIEF, TRANSPORTATION ENGINEERING AND CONSTRUCTION

DIRECTOR, DEPARTMENT OF TRANSPORTATION

CITY OF BALTIMORE
DEPARTMENT OF TRANSPORTATION
TRANSPORTATION ENGINEERING AND CONSTRUCTION

STREET CUT REPAIR
FULL DEPTH
FLEXIBLE PAVEMENT

ISSUED	REVISED	REVISED
8 / 2010		

STANDARD NO.
BC 576.19-1

SCALE : NONE

SHEET 1 OF 2

CONSTRUCTION NOTES AND REQUIREMENTS

THE FOLLOWING NOTES ARE APPLICABLE TO THE REPAIR OF TRENCHES AND INTERMITTENT UTILITY CUTS IN EXISTING FULL DEPTH FLEXIBLE PAVEMENT.

SEE STANDARD BC 576.19-1 FOR CONSTRUCTION DETAILS.

REMOVE EXISTING PAVEMENT:

EXISTING PAVEMENT SHALL BE REMOVED TO THE DIMENSIONS SHOWN ON THE CONSTRUCTION DETAIL FOR BOTH LONGITUDINAL AND TRANSVERSE PAVEMENT CUTS.

PAVEMENT REPLACEMENT:

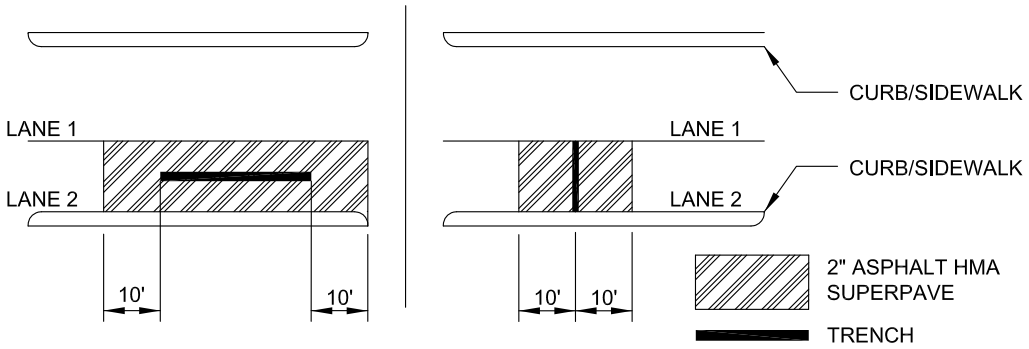

FIGURE 1
LONGITUDINAL TRENCH

FIGURE 2
TRANSVERSE TRENCH

MILLING AND OVERLAYING SHALL BE USED TO EXTEND THE LIMITS OF THE SURFACE COURSE BEYOND THE LIMITS OF THE FULL DEPTH PATCH IN ACCORDANCE WITH THE FOLLOWING:

A. LONGITUDINAL TRENCHES:
REMOVE THE TOP 2" (INCHES) OF THE EXISTING SURFACE ASPHALT PAVEMENT, BY CLEAN SAW CUT. FOR THE ENTIRE TRAFFIC LANE WIDTH WHERE THE TRENCH IS LOCATED, AND RESURFACE WITH 2" INCHES OF HOT MIX ASPHALT SUPER PAVE 12.5mm. FOR SURFACE COURSE PG64-22, LEVEL 2. ADD AN ADDITIONAL 10 FT. AT THE BEGINNING AND ENDING OF TRENCH. SEE FIGURE 1 ABOVE.

B. TRANSVERSE TRENCH AND INTERMITTENT UTILITY CUT:
REMOVE THE TOP 2" (INCHES) OF THE EXISTING SURFACE ASPHALT PAVEMENT. 10' ON EACH SIDE OF THE TRENCH AND INTERMITTENT UTILITY CUT FOR THE ENTIRE WIDTH OF THE AFFECTED TRAFFIC LANE AND RESURFACE WITH 2" HOT MIX ASPHALT SUPERPAVE 12.5mm FOR SURFACE COURSE PG64-22 LEVEL 2. SEE FIGURE 2 ABOVE.

THE TOP 6 INCHES OF THE TRENCH OR INTERMITTENT UTILITY CUT SHALL BE FILLED WITH COMPACTED SUBBASE (6 INCHES CRUSHER RUN AGGREGATE, CR-6). ADDITIONAL SUBBASE THICKNESS, IF REQUIRED, SHALL BE IN ACCORDANCE WITH THE PLANS OR AS DIRECTED BY THE ENGINEER. SEE 32-11-23.10 IN SPECIFICATIONS.

COMPACT SUBBASE OF ENTIRE OPENING BEFORE PLACING HOT MIX ASPHALT. THE FLEXIBLE PAVING SHALL BE REPLACED FLUSH WITH THE FINISHED PAVEMENT SURFACE USING A BASE COURSE WITH MAXIMUM 3 INCH COMPACTED LAYERS AND A 2 INCH COMPACTED SURFACE COURSE. SEE 32-01-30.10. 3.6.A.2.b IN SPECIFICATIONS.

ALL EXPOSED EDGES OF EXISTING FLEXIBLE PAVEMENT, THE SURFACE OF THE SUBBASE AND EACH LAYER OF HOT MIX ASPHALT SHALL BE TACK COATED IN ACCORDANCE WITH THE AFOREMENTIONED SPECIFICATIONS BEFORE THE NEXT LAYER OF HOT MIX ASPHALT IS PLACED.

GENERAL NOTES:

ALL WORK TO BE PERFORMED IN ACCORDANCE WITH THE LATEST BALTIMORE CITY STANDARD SPECIFICATIONS. PROCEDURE FOR MAINTENANCE OF TRAFFIC SHALL BE APPROVED BY THE DEPARTMENT OF TRANSPORTATION (DOT) BEFORE ANY EXISTING PAVEMENT IS REMOVED.

CITY OF BALTIMORE 1797	APPROVED: DIVISION CHIEF, TRANSPORTATION ENGINEERING AND CONSTRUCTION; DIRECTOR, DEPARTMENT OF TRANSPORTATION	CITY OF BALTIMORE DEPARTMENT OF TRANSPORTATION TRANSPORTATION ENGINEERING AND CONSTRUCTION	ISSUED	REVISED	REVISED
			8 / 2010		
		STREET CUT AND REPAIR FULL DEPTH FLEXIBLE PAVEMENT	STANDARD NO. BC 576.19-2		
			SCALE : NONE	SHEET 2 OF 2	

APPROVED:

DIVISION CHIEF, TRANSPORTATION ENGINEERING AND CONSTRUCTION

DIRECTOR, DEPARTMENT OF TRANSPORTATION

CITY OF BALTIMORE
DEPARTMENT OF TRANSPORTATION
TRANSPORTATION ENGINEERING AND CONSTRUCTION

STREET CUT AND REPAIR
FLEXIBLE SURFACE
RIGID BASE

ISSUED	REVISED	REVISED
8 / 2010		

STANDARD NO.
BC 576.20-1

SCALE : NONE

SHEET 1 OF 2

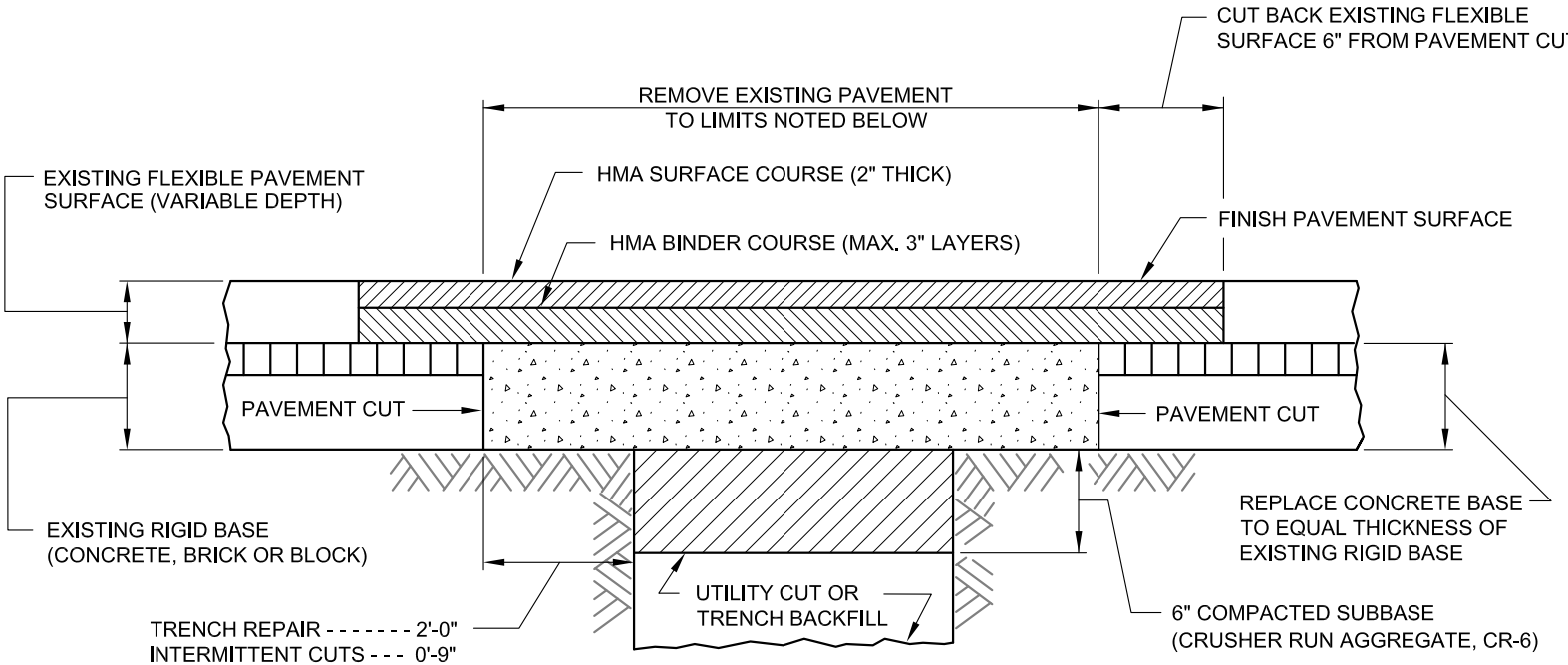

TRENCH REPAIR AND INTERMITTENT UTILITY CUTS

THIS DETAIL IS APPLICABLE TO THE REPAIR OF TRENCHES AND INTERMITTENT UTILITY CUTS IN EXISTING PAVEMENT HAVING A FLEXIBLE SURFACE AND A RIGID BASE.

SEE STANDARD BC 576.20-2 FOR CONSTRUCTION NOTES AND OTHER REQUIREMENTS.

CONSTRUCTION NOTES AND REQUIREMENTS

THE FOLLOWING NOTES ARE APPLICABLE TO THE REPAIR OF TRENCHES AND INTERMITTENT UTILITY CUTS IN EXISTING PAVEMENT HAVING A FLEXIBLE SURFACE AND A RIGID BASE.

SEE STANDARD BC 576.20-1 FOR CONSTRUCTION DETAILS

REMOVE EXISTING PAVEMENT:

EXISTING PAVEMENT SHALL BE REMOVED TO THE DIMENSIONS SHOWN ON THE CONSTRUCTION DETAIL FOR BOTH LONGITUDINAL AND TRANSVERSE PAVEMENT CUTS. WHERE IT CAN BE DETERMINED THAT A PAVEMENT CUT IS LOCATED WITHIN 2 FEET OF AN EXISTING JOINT, THE ADDITIONAL WIDTH OF EXISTING BRICK AND CONCRETE BASE FROM THE PAVEMENT CUT TO THE EXISTING JOINT SHALL ALSO BE REMOVED.
SALVAGE LONGITUDINAL AND TRANSVERSE TIE BARS WHERE PAVEMENT IS REMOVED TO AN EXISTING JOINT.
CUT BACK EXISTING FLEXIBLE SURFACING AS SHOWN.

PAVEMENT REPLACEMENT:

THE TOP 6 INCHES OF THE TRENCH OR INTERMITTENT UTILITY CUT SHALL BE FILLED WITH COMPACTED SUBBASE. TYPE OF SUBBASE MATERIAL AND ADDITIONAL THICKNESS , IF REQUIRED SHALL BE IN ACCORDANCE WITH THE PLANS OR AS DIRECTED BY THE ENGINEER. SEE SECTION 32 11 23.10 IN SPECIFICATIONS.
CLEAN AND WET EDGES OF EXISTING PAVEMENT AND COMPACT AND DAMPEN SUBBASE OF ENTIRE OPENING BEFORE PLACING CONCRETE. AT EXISTING JOINTS, REPLACE 3/4 INCH EXPANSION MATERIAL, EXPANSION SLEEVES OR COMPLETE EXPANSION AND CONTRACTION JOINT ASSEMBLIES AS REQUIRED BEFORE PLACING CONCRETE.
AT PAVEMENT CUTS, DRILL HOLE AND INSTALL 1/2 OF LONGITUDINAL TIE DEVICE AS DIRECTED BY THE ENGINEER AND IN ACCORDANCE WITH STANDARD BC 572.61-2 PLACE CONCRETE BASE USING MIX 7 OR MIX 6 CONCRETE. SEE SECTION 32 01 30.10 IN SPECIFICATIONS.
THE FLEXIBLE PAVING SHALL BE REPLACED FLUSH WITH THE FINISHED PAVEMENT SURFACE USING A BINDER COURSE WITH MAXIMUM 3 INCH COMPACTED LAYERS AND A 2 INCH COMPACTED SURFACE COURSE. SEE SECTION 32 01 17.59 IN SPECIFICATIONS.
ALL EXPOSED EDGES OF EXISTING FLEXIBLE PAVEMENT, THE SURFACE OF CONCRETE BASE AND EACH LAYER OF HOT MIX ASPHALT (HMA) BINDER COURSE SHALL BE PRIMED WITH A MATERIAL SATISFACTORY TO THE ENGNIEER BEFORE THE NEXT LAYER OF HMA MIXTURE IS PLACED.

GENERAL NOTES:

ALL WORK TO BE PERFORMED IN ACCORDANCE WITH THE LATEST DEPARTMENT OF GENERAL SERVICES (DGS) SPECIFICATIONS. PROCEDURE FOR MAINTENANCE OF TRAFFIC SHALL BE APPROVED BY THE DEPARTMENT OF TRANSPORTATION (DOT)BEFORE ANY EXISTING PAVEMENT IS REMOVED.

CITY OF BALTIMORE 1797

APPROVED:

DIVISION CHIEF, TRANSPORTATION ENGINEERING AND CONSTRUCTION

DIRECTOR, DEPARTMENT OF TRANSPORTATION

CITY OF BALTIMORE
DEPARTMENT OF TRANSPORTATION
TRANSPORTATION ENGINEERING AND CONSTRUCTION

STREET CUT AND REPAIR
FLEXIBLE SURFACE
RIGID BASE

ISSUED	REVISED	REVISED
8 / 2010		

STANDARD NO.
BC 576.20-2

SCALE : NONE

APPLICABLE WHERE UTILITY STRUCTURES ARE RAISED FROM 1" TO 6"

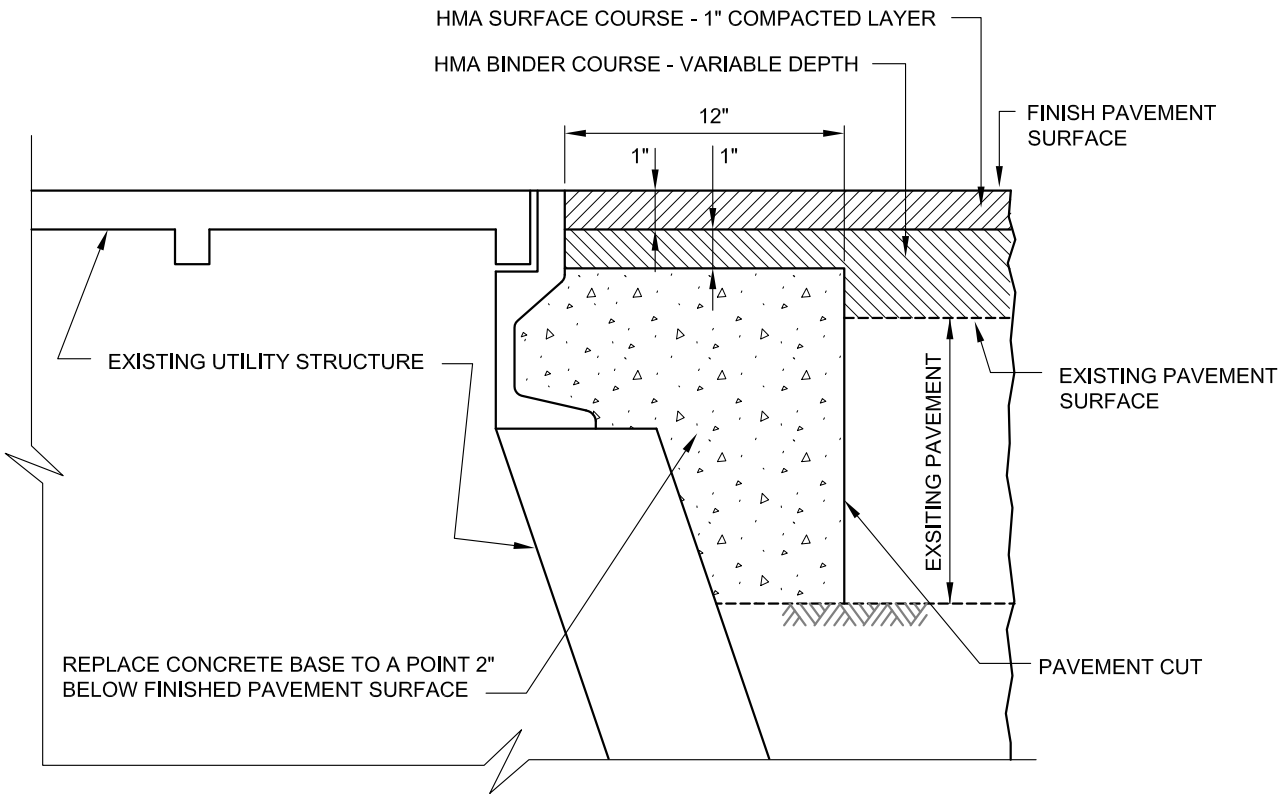

REPAIR AT UTILITY ADJUSTMENT

REMOVE EXISTING PAVEMENT:

EXISTING PAVEMENT SHALL BE REMOVED TO THE PAVEMENT CUT SHOWN ON THE DETAIL.

UTILITY ADJUSTMENTS:

ADJUST ALL UTILITY STRUCTURES AS REQUIRED TO MEET THE FINISHED PAVEMENT SURFACE. THE METHODS AND REQUIREMENTS FOR ADJUSTING UTILITY STRUCTURES AND PAYMENT THEREFOR SHALL BE AS NOTED ON THE PLANS OR IN THE SPECIAL PROVISIONS.

PAVEMENT REPAIR AT UTILITY ADJUSTMENT:

PLACE CONCRETE BASE USING MIX 6 CONCRETE. SEE SECTION 32 01 30.10 IN SPECIFICATIONS. THE FLEXIBLE PAVING SHALL BE REPLACED FLUSH WITH THE FINISHED PAVEMENT SURFACE USING A BINDER COURSE WITH MAXIMUM 3 INCH COMPACTED LAYERS AND A 1 INCH COMPACTED SURFACE COURSE. SEE SECTION 32 01 17.59 IN SPECIFICATIONS. ALL EXPOSED EDGES OF EXISTING FLEXIBLE PAVEMENT, THE SURFACE OF THE CONCRETE BASE AND EACH LAYER OF HOT MIX ASPHALT (HMA) BINDER REPAIR SHALL BE PRIMED WITH MATERIAL SATISFACTORY TO THE ENGINEER BEFORE THE HMA MIXTURE IS PLACED.

GENERAL NOTES:

ALL WORK TO BE PERFORMED IN ACCORDANCE WITH THE LATEST DEPARTMENT OF GENERAL SERVICES (DGS) SPECIFICATIONS. PROCEDURE FOR MAINTENANCE OF TRAFFIC SHALL BE APPROVED BY THE DEPARTMENT OF TRANSPORTATION (DOT) BEFORE ANY EXISTING PAVEMENT IS REMOVED. FOR DETAILS OF LOWERING UTILITY STRUCTURES, SEE STANDARD BC 576.22-2 AND BC 576.22-3.

CITY OF BALTIMORE 1797	APPROVED: DIVISION CHIEF, TRANSPORTATION ENGINEERING AND CONSTRUCTION; DIRECTOR, DEPARTMENT OF TRANSPORTATION	CITY OF BALTIMORE DEPARTMENT OF TRANSPORTATION TRANSPORTATION ENGINEERING AND CONSTRUCTION	ISSUED	REVISED	REVISED
			8 / 2010		
		STREET CUT AND REPAIR UTILITY ADJUSTMENT RAISE - 1" TO 6"	STANDARD NO. BC 576.22-1		
			SCALE : NONE	SHEET 1 OF 3	

APPLICABLE WHERE UTILITY STRUCTURES ARE LOWERED NOT MORE THAN 2"
AND EXISTING PAVEMENT IS FULL DEPTH FLEXIBLE OR FLEXIBLE SURFACE ON RIGID BASE

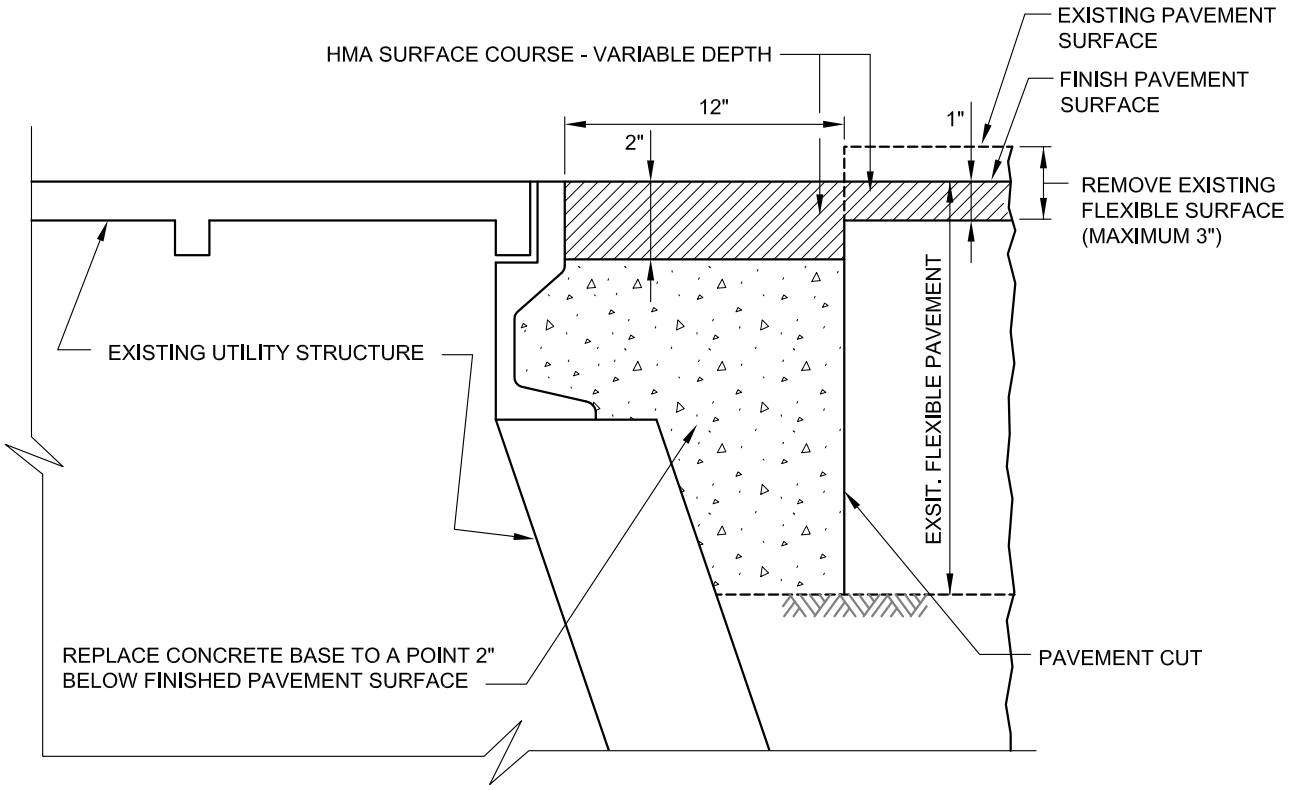

REPAIR AT UTILITY ADJUSTMENT

REMOVE EXISTING PAVEMENT:

EXISTING PAVEMENT SHALL BE REMOVED TO THE PAVEMENT CUT SHOWN ON THE DETAIL.

UTILITY ADJUSTMENTS:

ADJUST ALL UTILITY STRUCTURES AS REQUIRED TO MEET THE FINISHED PAVEMENT SURFACE. THE METHODS AND REQUIREMENTS FOR ADJUSTING UTILITY STRUCTURES AND PAYMENT THEREFOR SHALL BE AS NOTED ON THE PLANS OR IN THE SPECIAL PROVISIONS.

PAVEMENT REPAIR AT UTILITY ADJUSTMENT:

PLACE CONCRETE BASE USING MIX 6 CONCRETE. SEE SECTION 32 01 30.10 IN SPECIFICATIONS. THE FLEXIBLE PAVING SHALL BE REPLACED FLUSH WITH THE FINISHED PAVEMENT SURFACE USING ONE LAYER OF COMPACTED SURFACE COURSE. SEE SECTION 32 01 17.59 IN SPECIFICATIONS. ALL EXPOSED EDGES OF EXISTING FLEXIBLE PAVEMENT, THE SURFACE OF THE CONCRETE BASE AND EACH LAYER OF HOT MIX ASPHALT (HMA) BINDER REPAIR SHALL BE PRIMED WITH MATERIAL SATISFACTORY TO THE ENGINEER BEFORE THE HMA MIXTURE IS PLACED.

GENERAL NOTES:

ALL WORK TO BE PERFORMED IN ACCORDANCE WITH THE LATEST DEPARTMENT OF GENERAL SERVICES (DGS) SPECIFICATIONS. PROCEDURE FOR MAINTENANCE OF TRAFFIC SHALL BE APPROVED BY THE DEPARTMENT OF TRANSPORTATION (DOT) BEFORE ANY EXISTING PAVEMENT IS REMOVED.
WHERE UTILITY STRUCTURE IS LOWERED MORE THAN 2" WITH AN EXISTING FULL DEPTH FLEXIBLE PAVEMENT, THE EXISTING PAVEMENT SHOULD BE RECONSTRUCTED. PAVEMENT REPLACEMENT UNDER THESE CONDITIONS WILL BE AS NOTED ON THE PLANS OR AS DIRECTED BY THE ENGINEER. WHERE UTILITY STRUCTURE IS LOWERED MORE THAN 2" AND THE EXISTING FLEXIBLE PAVEMENT HAS A RIGID BASE, REFER TO STANDARD BC 576.22-3 FOR CONSTRUCTION DETAILS.

CITY OF BALTIMORE 1797

APPROVED:

DIVISION CHIEF, TRANSPORTATION ENGINEERING AND CONSTRUCTION

DIRECTOR, DEPARTMENT OF TRANSPORTATION

CITY OF BALTIMORE
DEPARTMENT OF TRANSPORTATION
TRANSPORTATION ENGINEERING AND CONSTRUCTION

STREET CUT AND REPAIR
UTILITY ADJUSTMENT
LOWER - 2" MAX.

ISSUED	REVISED	REVISED
8 / 2010		

STANDARD NO.
BC 576.22-2

SCALE : NONE

APPLICABLE WHERE UTILITY STRUCTURES ARE LOWERED FROM 2" TO 6" AND THE EXISTING PAVEMENT HAS A FLEXIBLE SURFACE ON A RIGID BASE

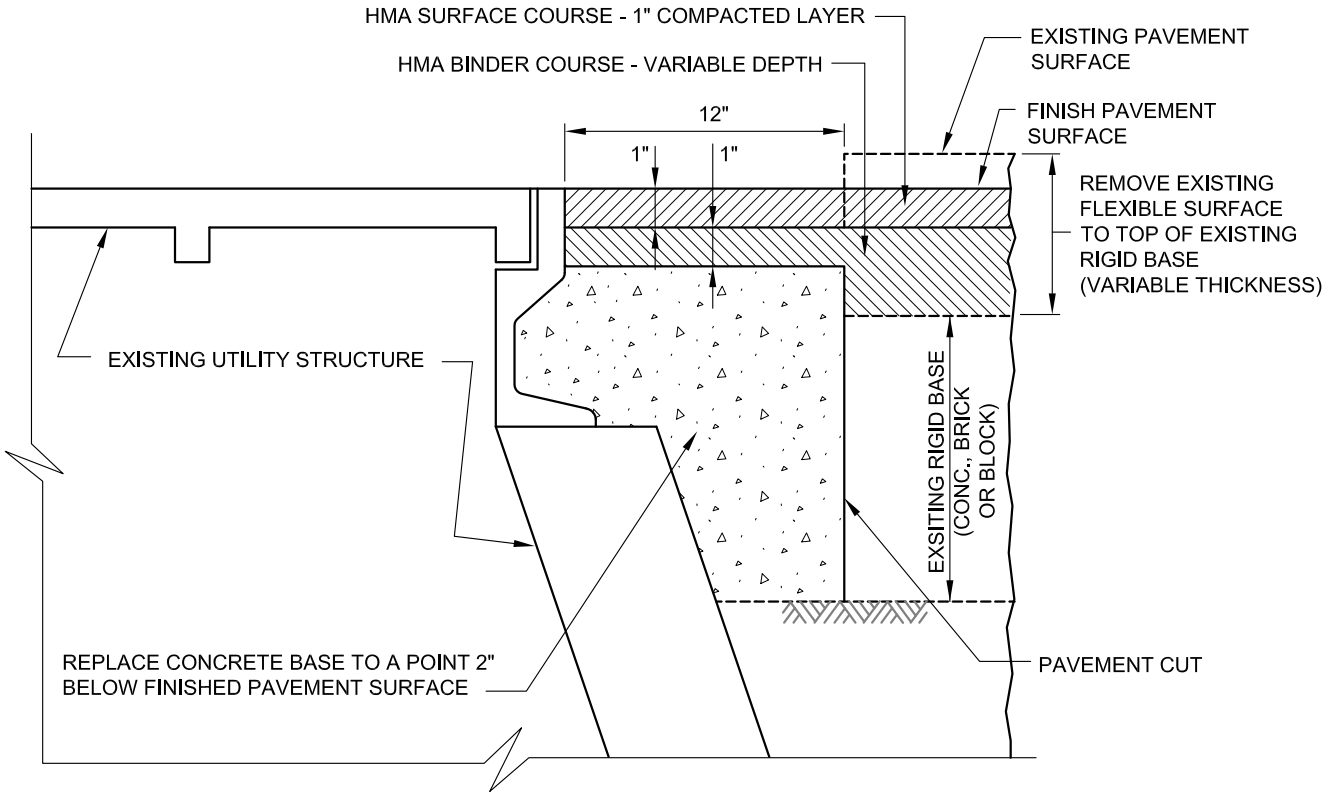

REPAIR AT UTILITY ADJUSTMENT

REMOVE EXISTING PAVEMENT:

EXISTING PAVEMENT SHALL BE REMOVED TO THE PAVEMENT CUT SHOWN ON THE DETAIL.

UTILITY ADJUSTMENTS:

ADJUST ALL UTILITY STRUCTURES AS REQUIRED TO MEET THE FINISHED PAVEMENT SURFACE. THE METHODS AND REQUIREMENTS FOR ADJUSTING UTILITY STRUCTURES AND PAYMENT THEREFOR SHALL BE AS NOTED ON THE PLANS OR IN THE SPECIAL PROVISIONS.

PAVEMENT REPAIR AT UTILITY ADJUSTMENT:

PLACE CONCRETE BASE USING CL. MIX 6. SEE SECTION 32 01 30.10 IN SPECIFICATIONS. THE FLEXIBLE PAVING SHALL BE REPLACED FLUSH WITH THE FINISHED PAVEMENT SURFACE USING A BINDER COURSE WITH MAXIMUM 3 INCH COMPACTED LAYERS AND A 1 INCH COMPACTED SURFACE COURSE. SEE SECTION 32 01 17.59 IN SPECIFICATIONS. ALL EXPOSED EDGES OF EXISTING FLEXIBLE PAVEMENT, THE SURFACE OF THE CONCRETE BASE AND EACH LAYER OF HOT MIX ASPHALT (HMA) BINDER REPAIR SHALL BE PRIMED WITH MATERIAL SATISFACTORY TO THE ENGINEER BEFORE THE HMA MIXTURE IS PLACED.

GENERAL NOTES:

ALL WORK TO BE PERFORMED IN ACCORDANCE WITH THE LATEST DEPARTMENT OF GENERAL SERVICES (DGS) SPECIFICATIONS. PROCEDURE FOR MAINTENANCE OF TRAFFIC SHALL BE APPROVED BY THE DEPARTMENT OF TRANSPORTATION (DOT) BEFORE ANY EXISTING PAVEMENT IS REMOVED.
WHERE UTILITY STRUCTURE IS LOWERED MORE THAN 6" OR LOWER THAN 1" ABOVE THE TOP OF THE EXISTING RIGID BASE, THE EXISTING PAVEMENT SHOULD BE RECONSTRUCTED. PAVEMENT REPLACEMENT UNDER THESE CONDITIONS WILL BE AS NOTED ON THE PLANS OR AS DIRECTED BY THE ENGINEER.

CITY OF BALTIMORE 1797	APPROVED: Bimal Devkota DIVISION CHIEF, TRANSPORTATION ENGINEERING AND CONSTRUCTION Khalil Zaid DIRECTOR, DEPARTMENT OF TRANSPORTATION	CITY OF BALTIMORE DEPARTMENT OF TRANSPORTATION TRANSPORTATION ENGINEERING AND CONSTRUCTION	ISSUED 8 / 2010	REVISED	REVISED
		STREET CUT AND REPAIR UTILITY ADJUSTMENT LOWER - 2" TO 6"	STANDARD NO. BC 576.22-3		
			SCALE : NONE	SHEET 3 OF 3	

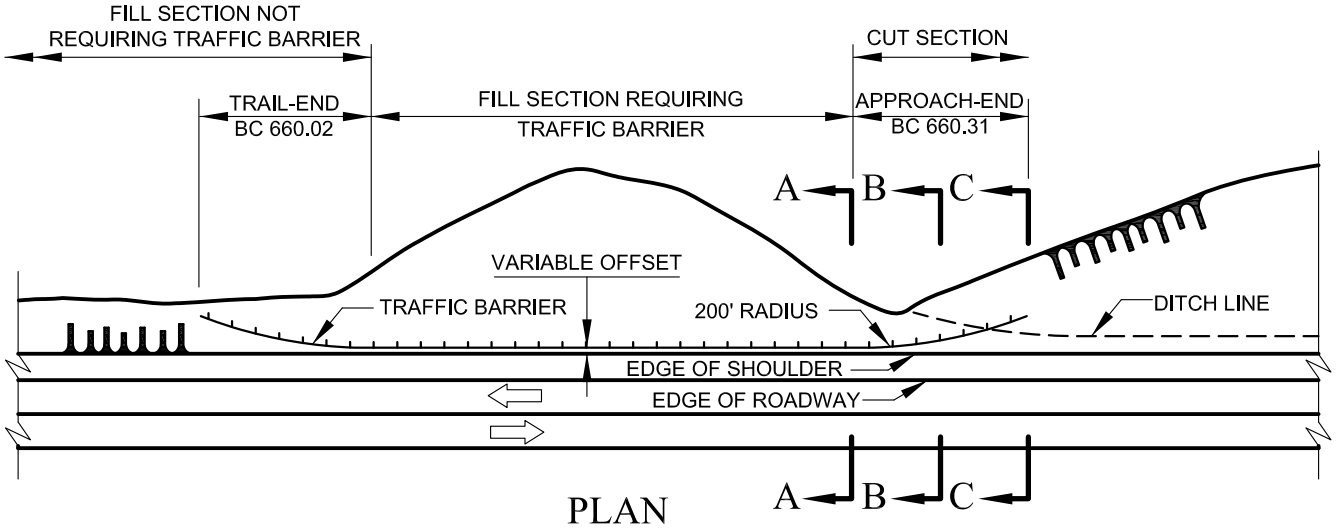

PLAN

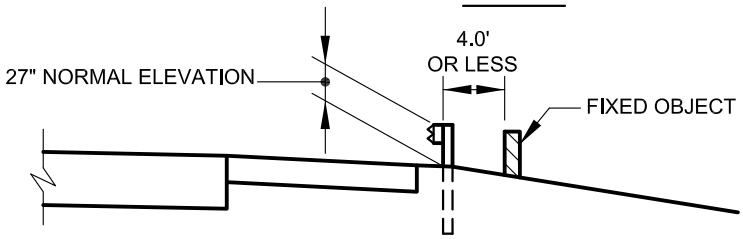

EMBANKMENT
SLOPE VARIATIONS
FOR
RAIL DETERMINATION

2:1	5' & OVER
3:1	10' & OVER
4:1 & LESS	TO PROTECT OBSTACLES ONLY

USE REINFORCED RAIL SECTION AT ALL FIXED OBJECTS.

SECTION A-A

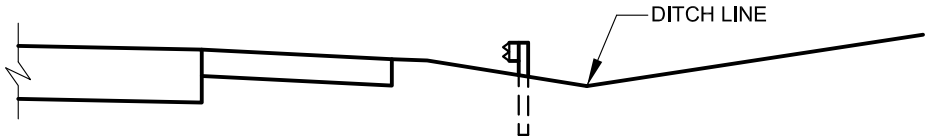

SECTION B-B

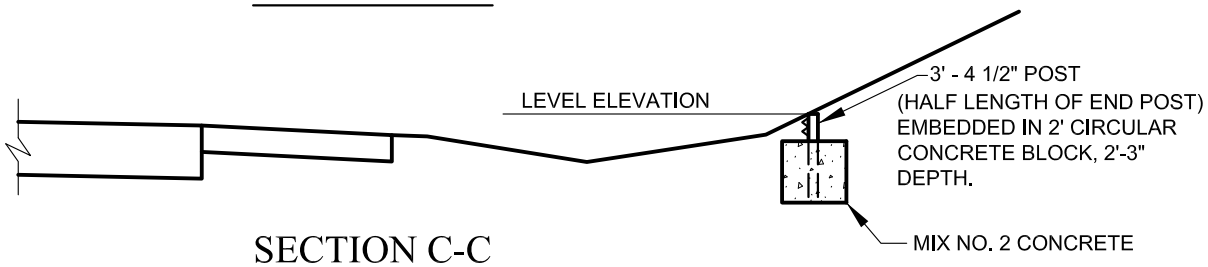

SECTION C-C

APPROACH END TO BE FLARED AT NORMAL ELEVATION FROM SHOULDER TO DITCH LINE AND EXTENDED AT LEVEL ELEVATION INTO CUT BACKSLOPE ANCHORED WITH POST AND CONCRETE BLOCK TO END TRAFFIC BARRIER. THE CONTRACTOR SHALL ADJUST THE PLACEMENT OF POSTS, WHERE NECESSARY, TO AVOID POSTS BEING INSTALLED IN THE CENTER OF THE DITCH.

APPROVED :

Frank Murphy

DEPUTY DIRECTOR - OPERATIONS

Khalil Zaied

DIRECTOR, DEPARTMENT OF TRANSPORTATION

CITY OF BALTIMORE
DEPARTMENT OF TRANSPORTATION
TRAFFIC DIVISION

ISSUED	REVISED	REVISED
8 / 2010		

TRAFFIC BARRIER W BEAM
END TREATMENT
CUT TO FILL

STANDARD NO.
BC 660.11

SCALE : NONE

SHEET 1 OF 1

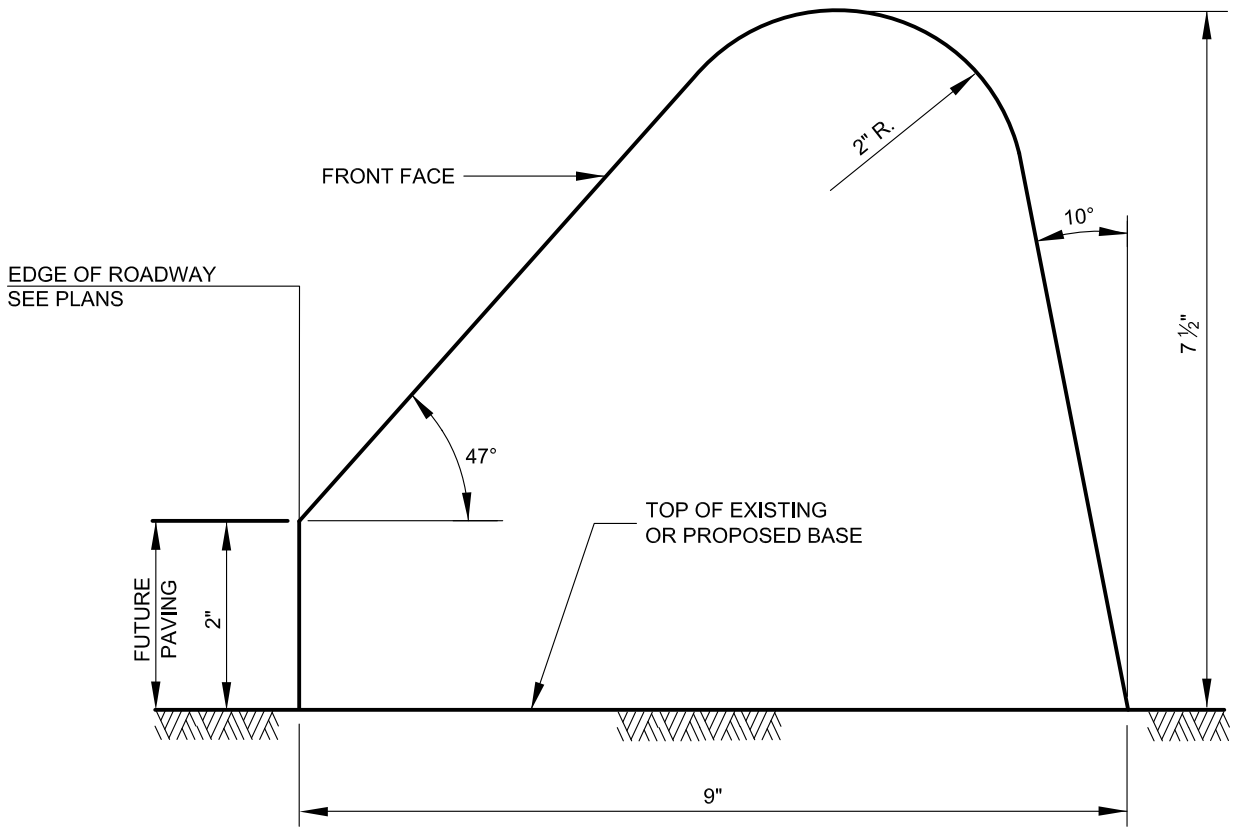

APPROVED:

DIVISION CHIEF, TRANSPORTATION ENGINEERING AND CONSTRUCTION

DIRECTOR, DEPARTMENT OF TRANSPORTATION

CITY OF BALTIMORE
DEPARTMENT OF TRANSPORTATION
TRANSPORTATION ENGINEERING AND CONSTRUCTION

STANDARD HOT MIX ASPHALT CURB

ISSUED	REVISED	REVISED
8 / 2010		

STANDARD NO.
BC 615.01

SCALE : NONE

SHEET 1 OF 1

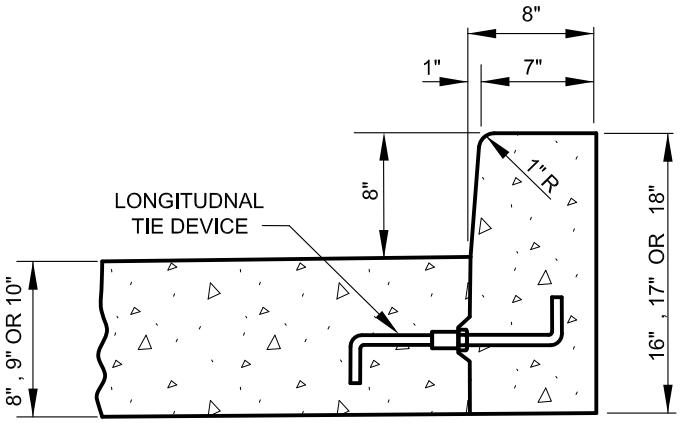

STANDARD TYPE 'A' CURB

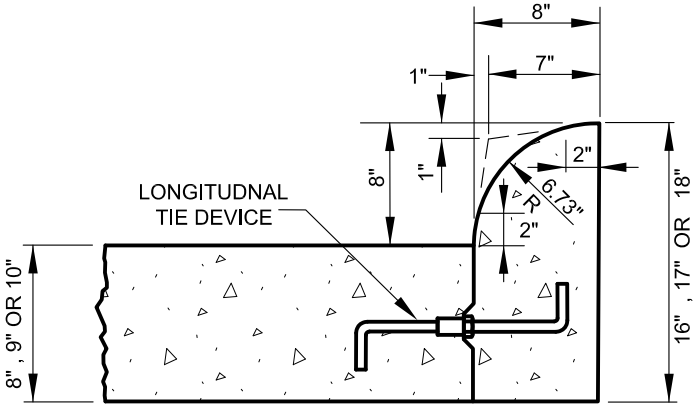

STANDARD TYPE 'A' MODIFIED CURB

NOTES

1. JOINT SPACING FOR CONCRETE CURBS = 10 FEET
2. SEE SPECIFICATIONS FOR LOCATION AND DESCRIPTION OF TREATMENT FOR THE TYPES OF JOINTS SPECIFIED
3. ALL CONCRETE CURBS SHALL BE TIED TO RIGID PAVEMENT USING A LONGITUDINAL TIE DEVICE, SEE BC 572.61-1

APPROVED:

DIVISION CHIEF, TRANSPORTATION ENGINEERING AND CONSTRUCTION

DIRECTOR, DEPARTMENT OF TRANSPORTATION

CITY OF BALTIMORE
DEPARTMENT OF TRANSPORTATION
TRANSPORTATION ENGINEERING AND CONSTRUCTION

ISSUED	REVISED	REVISED
8 / 2010		

STANDARD TYPE 'A' CURB
STANDARD
TYPE 'A' MODIFIED CURB

STANDARD NO.
BC 620.01

SCALE : NONE

SHEET 1 OF 1

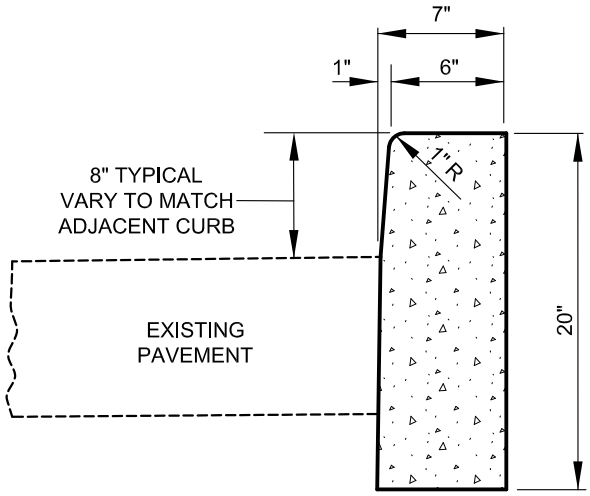

BC TYPE 'A' CURB

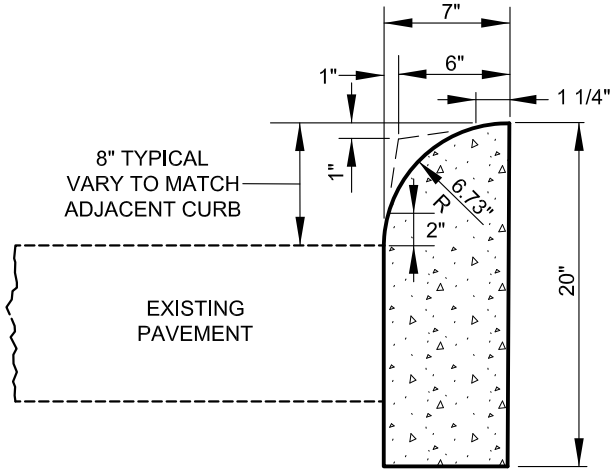

BC TYPE 'A' MODIFIED CURB

NOTES

1. JOINT SPACING FOR CONCRETE CURBS = 10 FEET.
2. SEE SPECIFICATIONS FOR LOCATION AND DESCRIPTION OF TREATMENT FOR THE TYPES OF JOINTS SPECIFIED.

TO BE USED FOR CURB REPAIRS ONLY

APPROVED:

DIVISION CHIEF, TRANSPORTATION ENGINEERING AND CONSTRUCTION

DIRECTOR, DEPARTMENT OF TRANSPORTATION

CITY OF BALTIMORE
DEPARTMENT OF TRANSPORTATION
TRANSPORTATION ENGINEERING AND CONSTRUCTION

ISSUED	REVISED	REVISED
8 / 2010		

BC TYPE 'A' CURB
BC TYPE 'A' MODIFIED CURB

STANDARD NO.
BC 620.02

SCALE : NONE

SHEET 1 OF 1

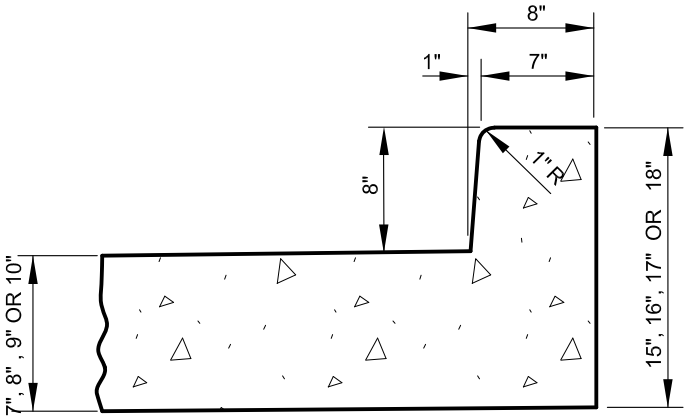

STANDARD ALLEY RETURN CURB

APPROVED:

DIVISION CHIEF, TRANSPORTATION ENGINEERING AND CONSTRUCTION

DIRECTOR, DEPARTMENT OF TRANSPORTATION

CITY OF BALTIMORE
DEPARTMENT OF TRANSPORTATION
TRANSPORTATION ENGINEERING AND CONSTRUCTION

STANDARD ALLEY RETURN CURB

ISSUED	REVISED	REVISED
8 / 2010		

STANDARD NO.
BC 620.03

SCALE : NONE

SHEET 1 OF 1

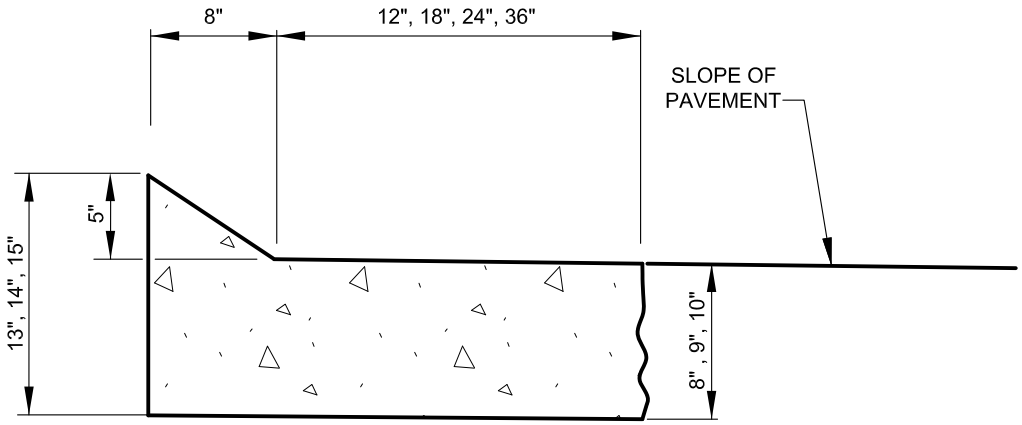

STANDARD MOUNTABLE "V" TYPE COMBINATION CURB & GUTTER

12", 18", 24", 36", GUTTER PAN ; 8" DEPTH

12", 18", 24", 36", GUTTER PAN ; 9" DEPTH

12", 18", 24", 36", GUTTER PAN ; 10" DEPTH

NOTES:

1. JOINT SPACING FOR MOUNTABLE "V" TYPE CURB IS 10 FEET
2. SEE SPECIFICATIONS FOR LOCATIONS AND DESCRIPTION OF TREATMENT FOR THE TYPES OF JOINTS USED.
3. UNLESS OTHERWISE SPECIFIED: A LONGITUDINAL TIE DEVICE PLACED AT MIDDLE OF KEYWAY (NOT SHOWN), SHALL BE USED AT CONSTRUCTION JOINT BETWEEN MOUNTABLE "V" TYPE CURB AND RIGID PAVEMENT. SEE BC 572.61-1.

APPROVED:

DIVISION CHIEF, TRANSPORTATION ENGINEERING AND CONSTRUCTION

DIRECTOR, DEPARTMENT OF TRANSPORTATION

CITY OF BALTIMORE
DEPARTMENT OF TRANSPORTATION
TRANSPORTATION ENGINEERING AND CONSTRUCTION

STD. MOUNTABLE "V" TYPE COMBINATION CURB & GUTTER

ISSUED	REVISED	REVISED
8 / 2010		

STANDARD NO.
BC 620.04

SCALE : NONE

SHEET 1 OF 1

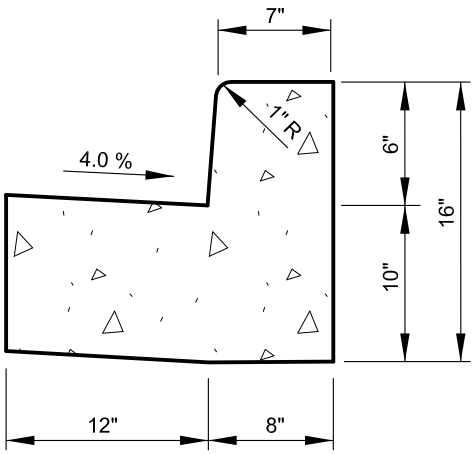

SPECIAL TYPE 'A' COMBINATION CURB AND GUTTER

(12" x 10" PAN)

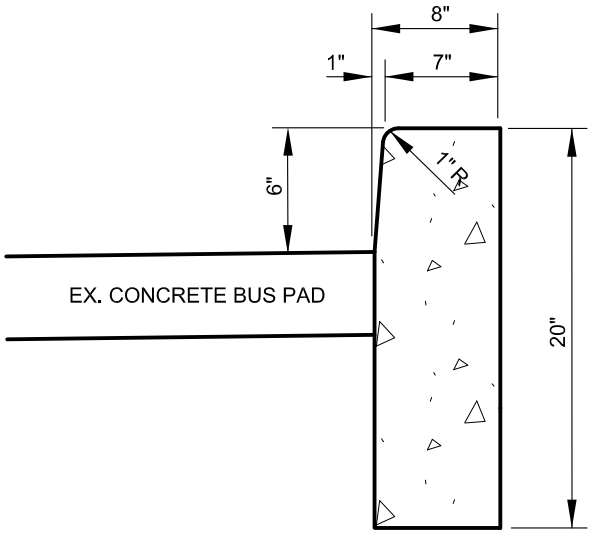

SPECIAL BC TYPE 'A' CURB

APPROVED:

DIVISION CHIEF, TRANSPORTATION ENGINEERING AND CONSTRUCTION

DIRECTOR, DEPARTMENT OF TRANSPORTATION

CITY OF BALTIMORE
DEPARTMENT OF TRANSPORTATION
TRANSPORTATION ENGINEERING AND CONSTRUCTION

SPECIAL TYPE 'A' COMBINATION CURB AND GUTTER, SPECIAL BC TYPE 'A' CURB

ISSUED	REVISED	REVISED
8 / 2010		

STANDARD NO. BC 620.05

SCALE : NONE

SHEET 1 OF 1

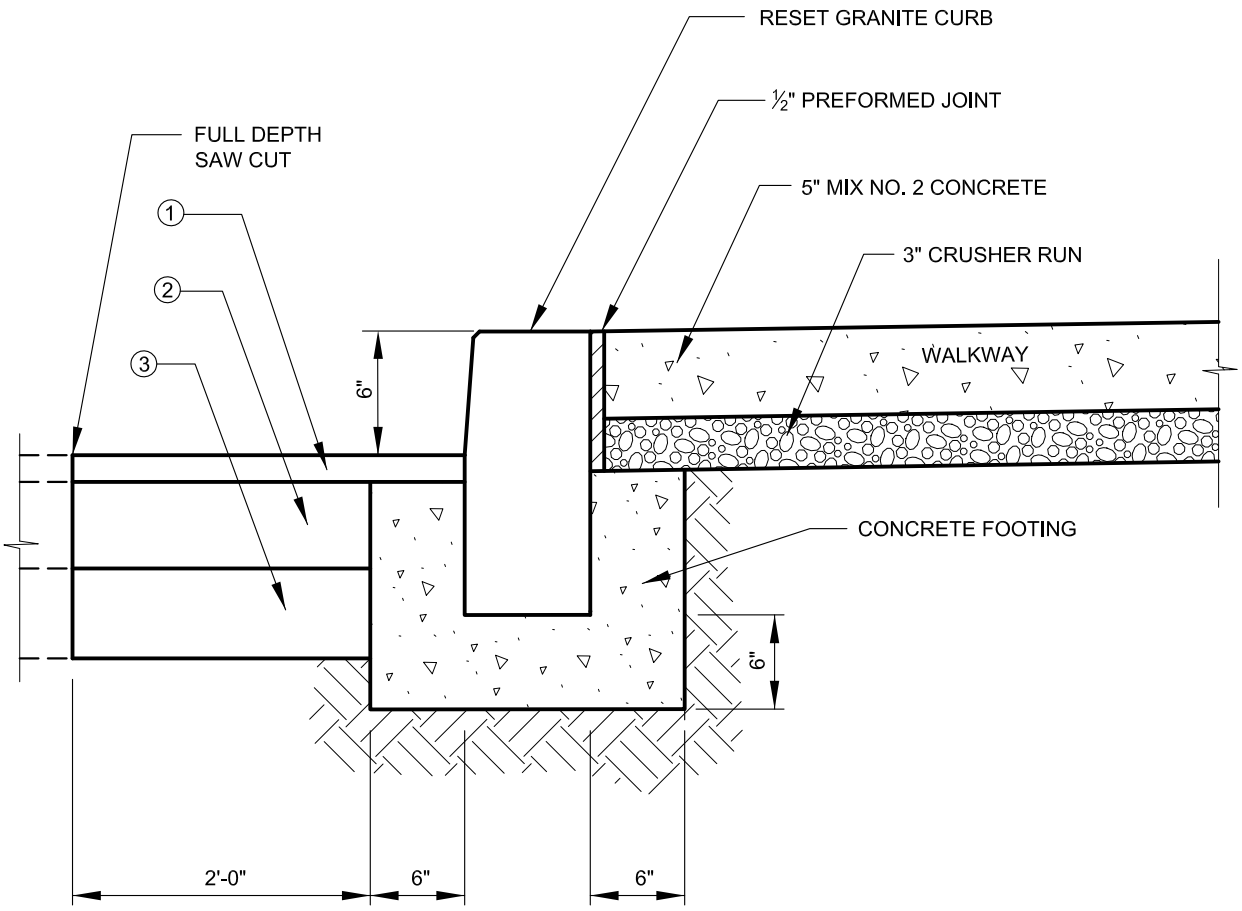

RESETTING GRANITE CURB

1. 2" HOT MIX ASPHALT SUPERPAVE 12.5 mm FOR SURFACE COURSE PG 64-22, LEVEL 2
2. 6" HOT MIX ASPHALT SUPERPAVE 19.0 mm FOR BASE COURSE PG 64-22, LEVEL 2 (2-3" LAYERS)
3. 6" CRUSHER RUN AGGREGATE (CR-6)

APPROVED:

DIVISION CHIEF, TRANSPORTATION ENGINEERING AND CONSTRUCTION

DIRECTOR, DEPARTMENT OF TRANSPORTATION

CITY OF BALTIMORE
DEPARTMENT OF TRANSPORTATION
TRANSPORTATION ENGINEERING AND CONSTRUCTION

ISSUED	REVISED	REVISED
8 / 2010		

RESETTING GRANITE CURB

STANDARD NO.
BC 620.06

SCALE : NONE

SHEET 1 OF 1

* GUTTER SLOPE ON HIGH SIDE OF SUPERELEVATED PAVEMENT TO BE SAME AS SLOPE OF PAVEMENT

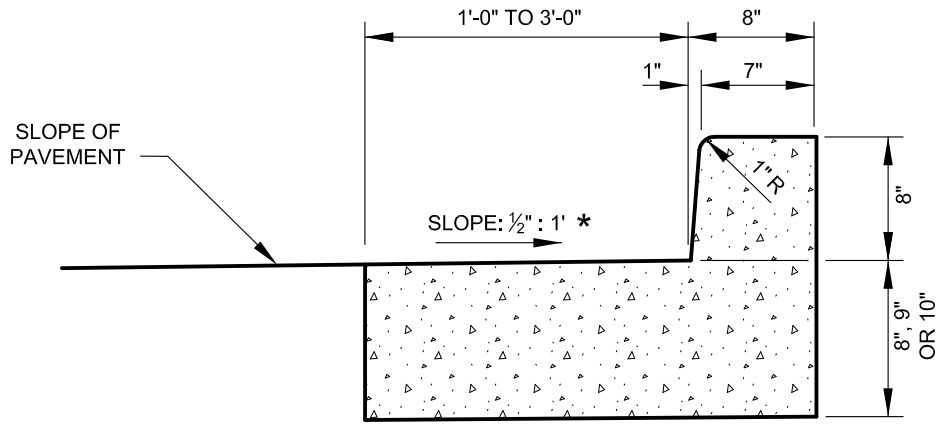

STANDARD TYPE 'A' COMBINATION CURB AND GUTTER

12", 18", 24", 36", GUTTER PAN ; 8" DEPTH

12", 18", 24", 36", GUTTER PAN ; 9" DEPTH

12", 18", 24", 36", GUTTER PAN ; 10" DEPTH

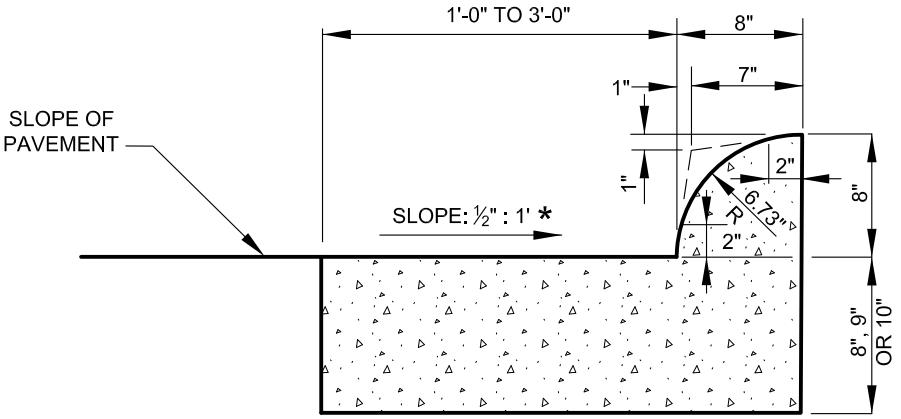

STANDARD TYPE 'A' MODIFIED CURB AND GUTTER

12", 18", 24", 36", GUTTER PAN ; 8" DEPTH

12", 18", 24", 36", GUTTER PAN ; 9" DEPTH

12", 18", 24", 36", GUTTER PAN ; 10" DEPTH

NOTES:

1. JOINT SPACING FOR COMBINATION CURB & GUTTER IS 10 FEET

2. SEE SPECIFICATIONS FOR LOCATION AND DESCRIPTION OF TREATMENT FOR THE TYPES OF JOINTS USED.

3. UNLESS OTHERWISE SPECIFIED A LONGITUDINAL TIE DEVICE PLACED AT MIDDLE OF KEYWAY (NOT SHOWN), SHALL BE USED AT CONSTRUCTION JOINT BETWEEN COMBINATION CURB & GUTTER AND RIGID PAVEMENT. SEE BC 572.61-1.

CITY OF BALTIMORE 1797	APPROVED: DIVISION CHIEF, TRANSPORTATION ENGINEERING AND CONSTRUCTION; DIRECTOR, DEPARTMENT OF TRANSPORTATION	CITY OF BALTIMORE DEPARTMENT OF TRANSPORTATION TRANSPORTATION ENGINEERING AND CONSTRUCTION	ISSUED	REVISED	REVISED
			8 / 2010		
		STD. COMB. CURB & GUTTER TYPE 'A' - STANDARD TYPE 'A' MODIFIED	STANDARD NO. BC 620.11		
			SCALE : NONE	SHEET 1 OF 1	

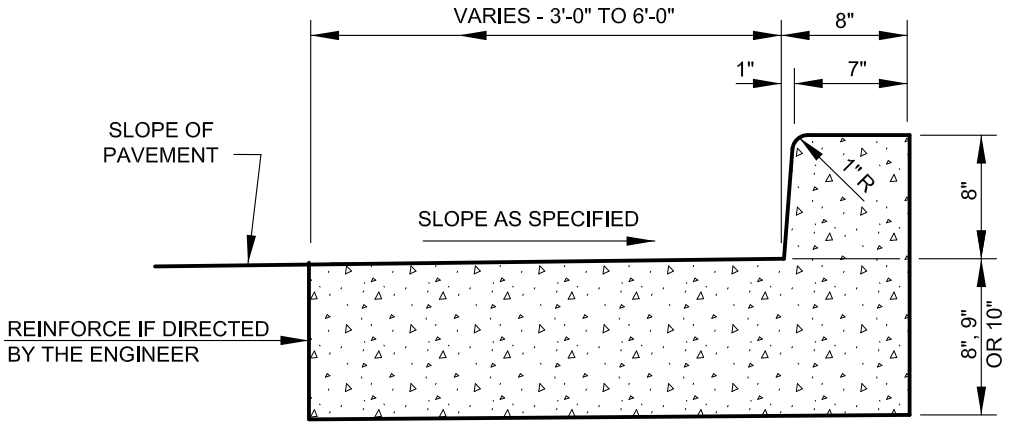

SPECIAL MONOLITHIC COMBINATION CURB AND GUTTER

3 FT. TO 6 FT. GUTTER PAN ; 8" DEPTH
3 FT. TO 6 FT. GUTTER PAN ; 9" DEPTH
3 FT. TO 6 FT. GUTTER PAN ; 10" DEPTH

NOTES:

1. JOINT SPACING FOR COMBINATION CURB & GUTTER IS 10 FEET

2. SEE SPECIFICATIONS FOR LOCATION AND DESCRIPTION OF TREATMENT FOR THE TYPES OF JOINTS USED.

3. UNLESS OTHERWISE SPECIFIED A LONGITUDINAL TIE DEVICE PLACED AT MIDDLE OF KEYWAY (NOT SHOWN), SHALL BE USED AT CONSTRUCTION JOINT BETWEEN COMBINATION CURB & GUTTER AND RIGID PAVEMENT. SEE BC 572.61-1.

APPROVED :

DIVISION CHIEF, TRANSPORTATION ENGINEERING AND CONSTRUCTION

DIRECTOR, DEPARTMENT OF TRANSPORTATION

CITY OF BALTIMORE
DEPARTMENT OF TRANSPORTATION
TRANSPORTATION ENGINEERING AND CONSTRUCTION

SPECIAL MONOLITHIC COMB. CURB & GUTTER

ISSUED	REVISED	REVISED
8 / 2010		

STANDARD NO. BC 620.12

SCALE : NONE

SHEET 1 OF 1

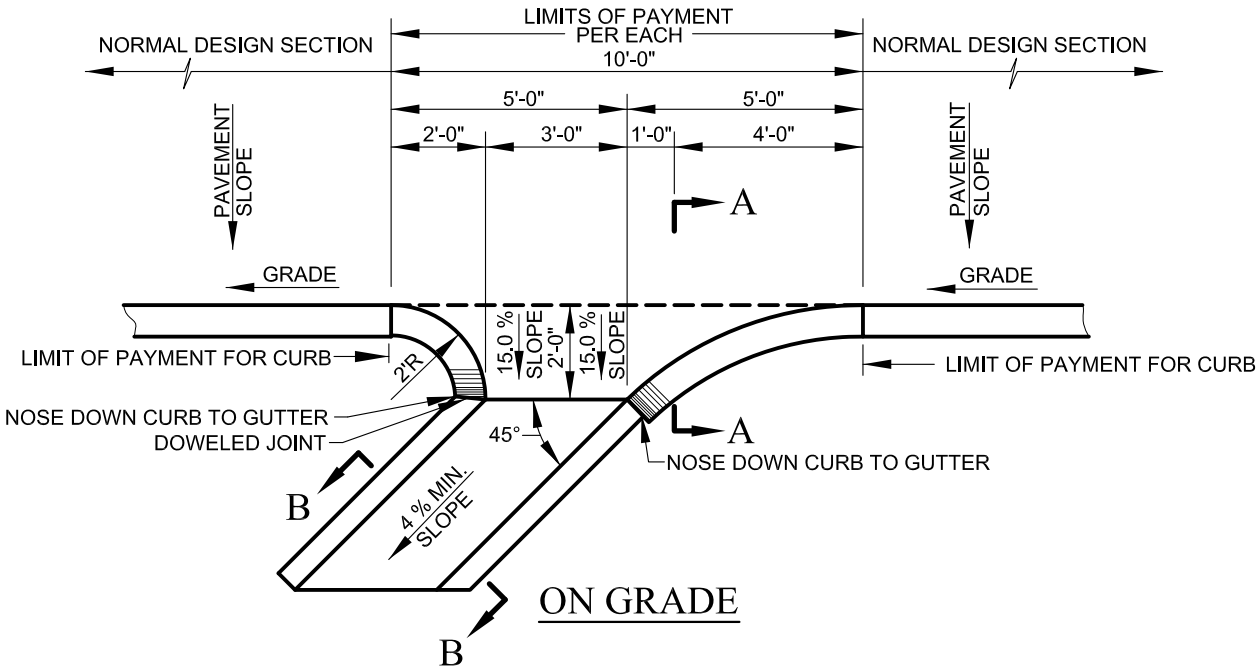

ON GRADE

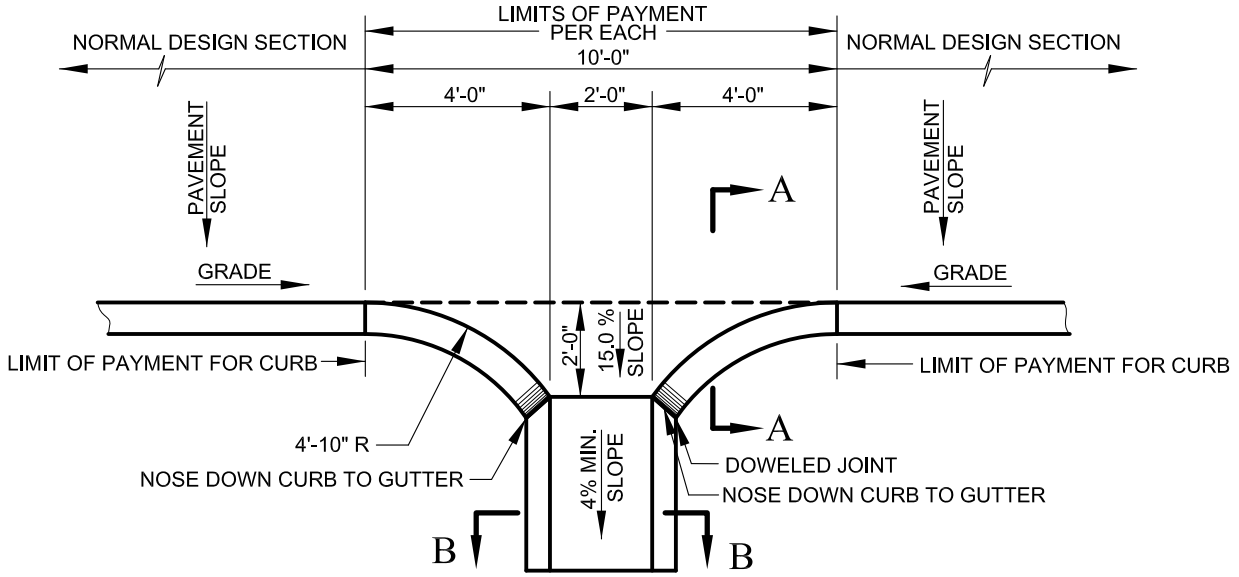

AT LOW POINT

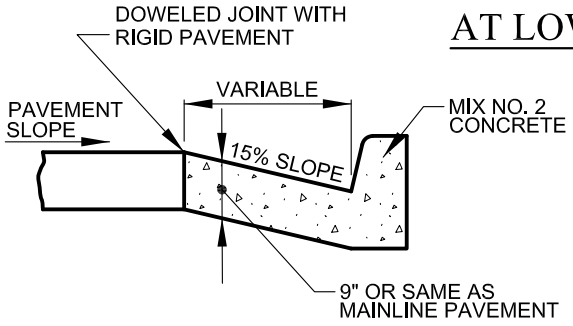

SECTION A-A

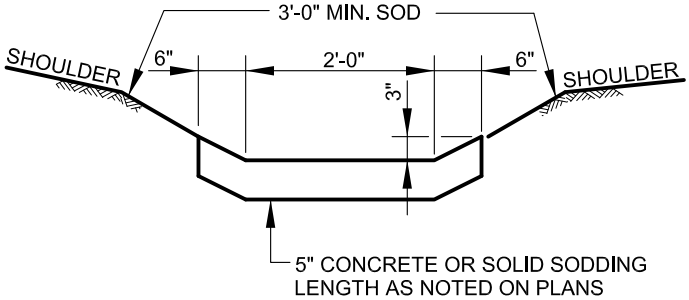

SECTION B-B

NOTE

FOR DETAIL OF JOINTS SEE LONGITUDINAL TIE DEVICES BC 572-61-1

APPROVED:

DIVISION CHIEF, TRANSPORTATION ENGINEERING AND CONSTRUCTION

DIRECTOR, DEPARTMENT OF TRANSPORTATION

CITY OF BALTIMORE
DEPARTMENT OF TRANSPORTATION
TRANSPORTATION ENGINEERING AND CONSTRUCTION

ISSUED	REVISED	REVISED
8 / 2010		

STANDARD CURB OPENING DETAIL CURB SECTION

STANDARD NO.
BC 640.01

SCALE : NONE

SHEET 1 OF 1

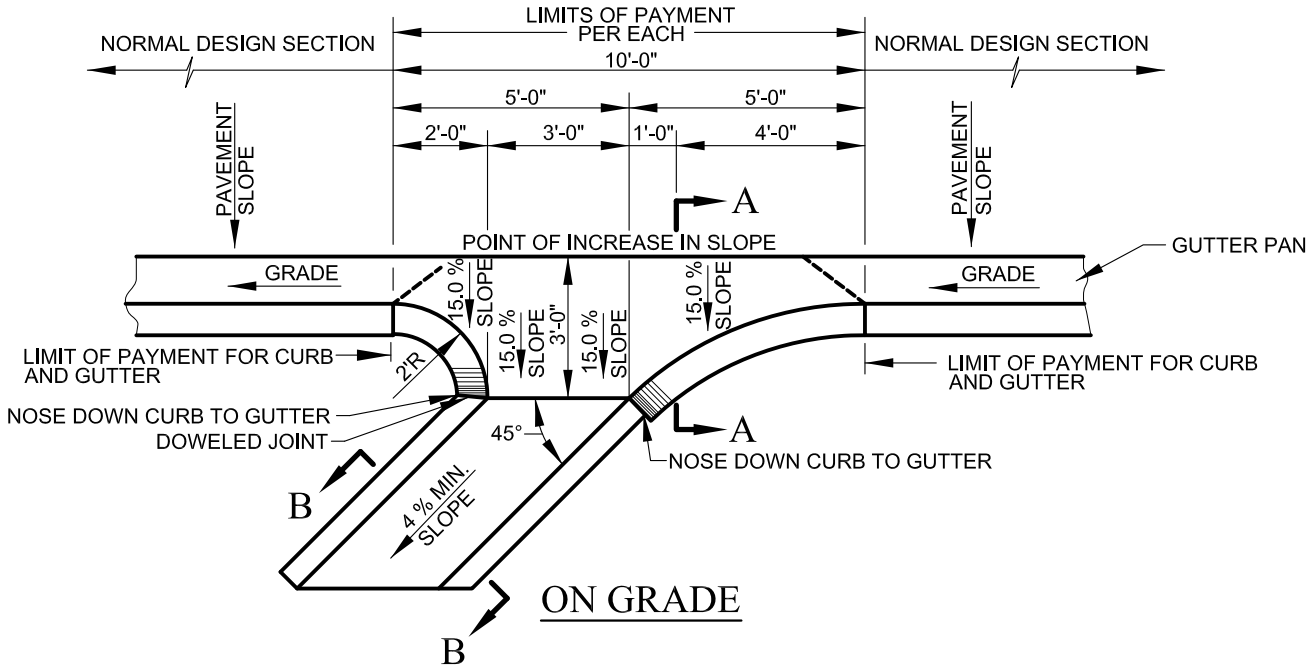

ON GRADE

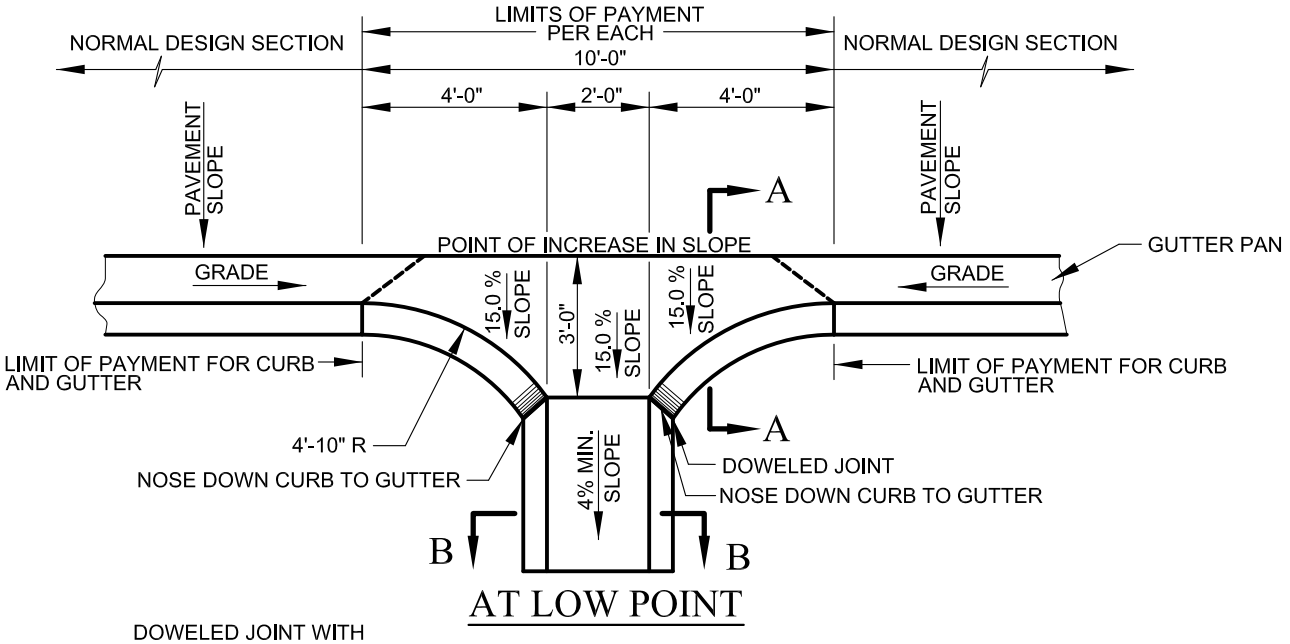

AT LOW POINT

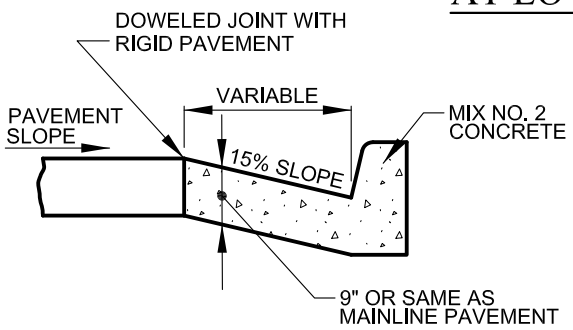

SECTION A-A

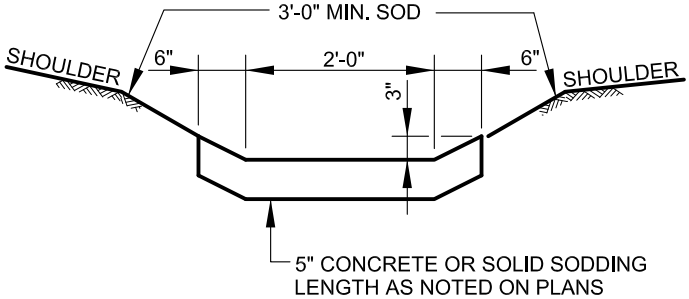

SECTION B-B

NOTE

FOR DETAIL OF JOINTS SEE LONGITUDINAL TIE DEVICES BC 572.61-1

APPROVED:

DIVISION CHIEF, TRANSPORTATION ENGINEERING AND CONSTRUCTION

DIRECTOR, DEPARTMENT OF TRANSPORTATION

CITY OF BALTIMORE
DEPARTMENT OF TRANSPORTATION
TRANSPORTATION ENGINEERING AND CONSTRUCTION

ISSUED	REVISED	REVISED
8 / 2010		

STANDARD CURB OPENING DETAIL CURB AND GUTTER SECTION

STANDARD NO.
BC 640.02

SCALE : NONE

SHEET 1 OF 1

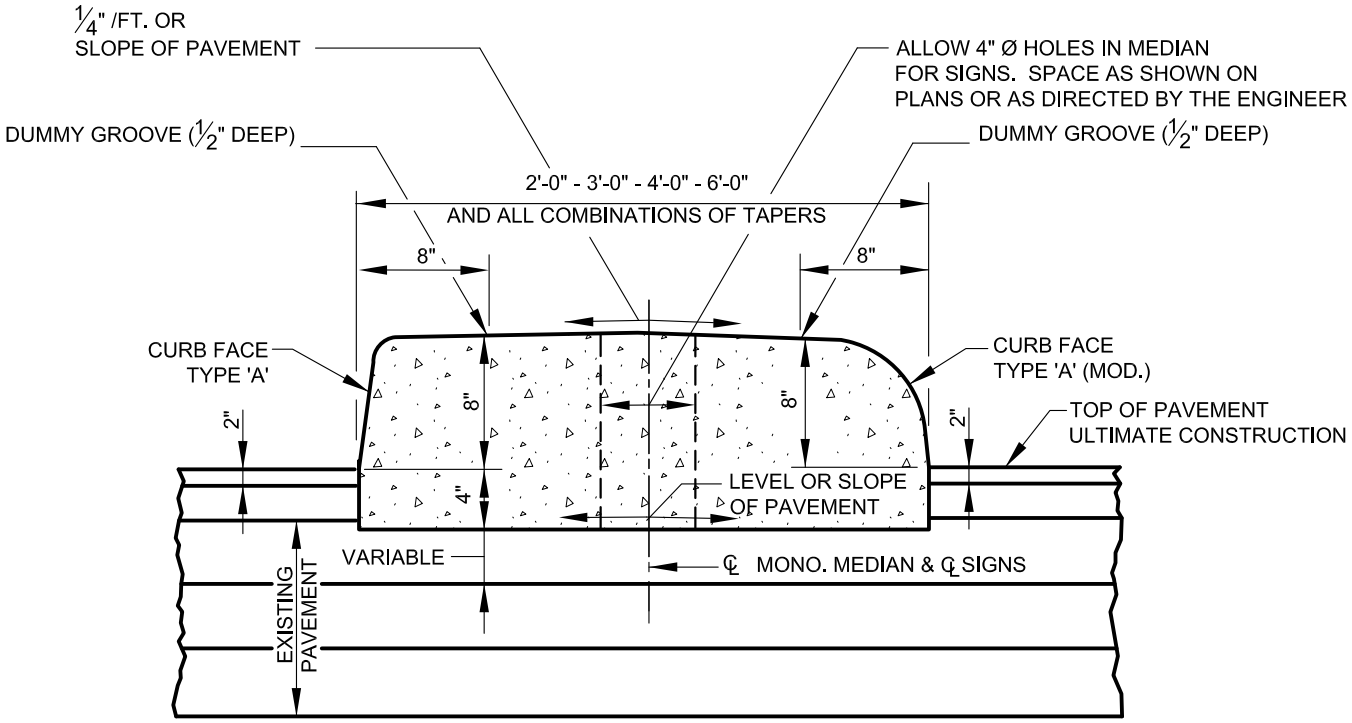

MONOLITHIC CONCRETE MEDIAN

TYPE 'A'

USE WITH FLEXIBLE PAVEMENT

NOTES

1. ON BOTH SIDES OF MEDIAN, USE CURB FACE TYPE 'A' OR TYPE 'A' MOD. AS CALLED FOR OR SHOWN ON PLANS. SEE BC 620.01, BC 645.04 AND BC 645.05.

2. JOINTS WILL BE SPACED 10'-0" APART (SIMILAR TO JOINTS FOR CONCRETE CURBS AND COMBINATION CURB & GUTTER). PROVIDE A DUMMY GROOVE (1/2" DEEP) AT 5 - FOOT INTERVALS BETWEEN JOINTS.

3. SPECIFICATIONS FOR CONCRETE CURB AND COMBINATION CONCRETE CURB & GUTTER WILL APPLY.

APPROVED:

DIVISION CHIEF, TRANSPORTATION ENGINEERING AND CONSTRUCTION

DIRECTOR, DEPARTMENT OF TRANSPORTATION

CITY OF BALTIMORE
DEPARTMENT OF TRANSPORTATION
TRANSPORTATION ENGINEERING AND CONSTRUCTION

ISSUED	REVISED	REVISED
8 / 2010		

MONOLITHIC CONCRETE MEDIAN TYPE 'A'

STANDARD NO. BC 645.01

SCALE : NONE

SHEET 1 OF 1

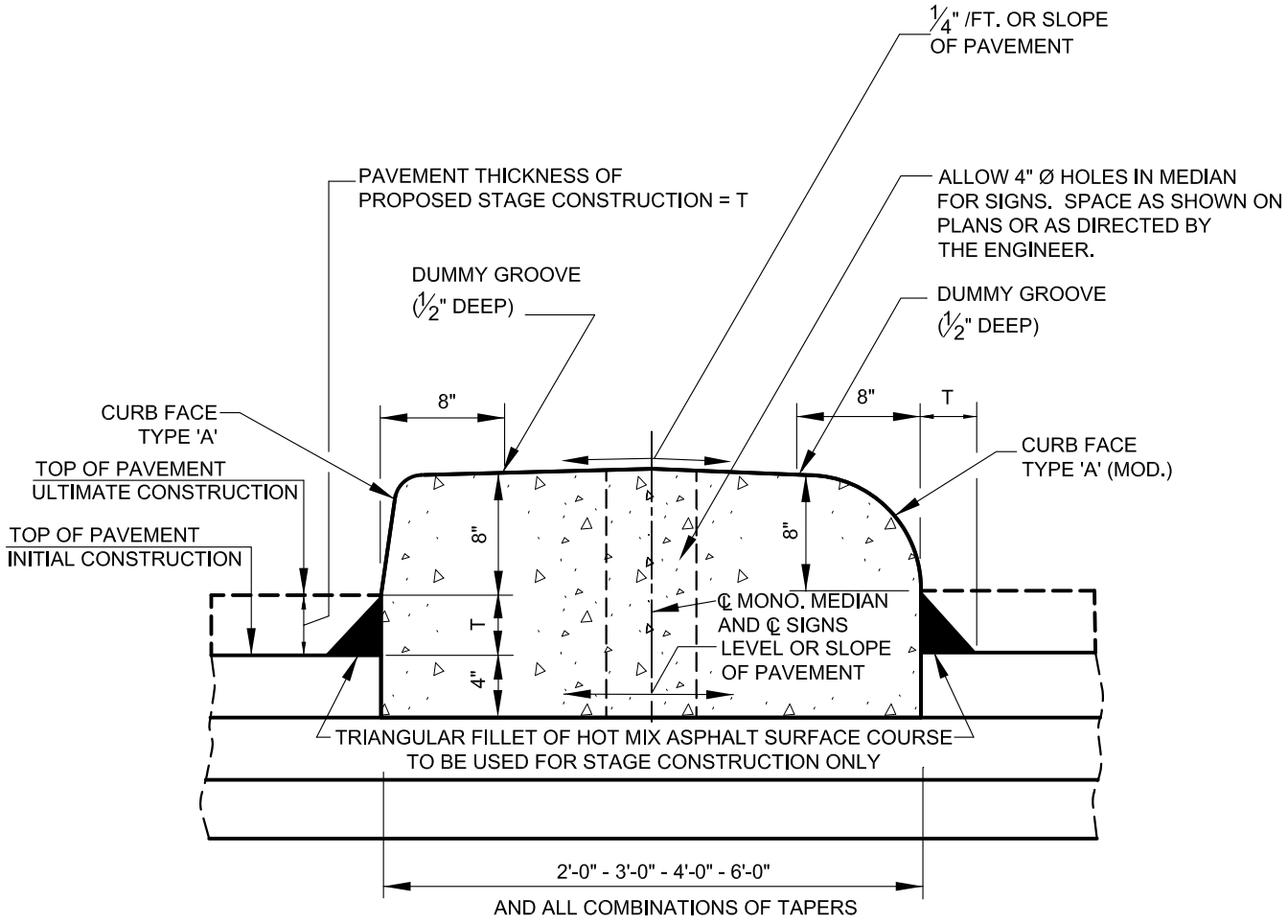

MONOLITHIC CONCRETE MEDIAN
TYPE 'B'

USE WITH FLEXIBLE PAVEMENT

NOTES:

1. ON BOTH SIDES OF MEDIAN, USE CURB FACE TYPE 'A' OR TYPE 'A' MOD. AS CALLED FOR OR SHOWN ON PLANS. SEE BC 620.01, BC 645.04 AND BC 645.05.

2. JOINTS WILL BE SPACED 10'-0" APART (SIMILAR TO JOINTS FOR CONCRETE CURBS AND COMBINATION CURB & GUTTER). PROVIDE A DUMMY GROOVE (1/2" DEEP) AT 5 - FOOT INTERVALS BETWEEN JOINTS.

3. SPECIFICATIONS FOR CONCRETE CURB AND COMBINATION CONCRETE CURB & GUTTER WILL APPLY.

APPROVED:

DIVISION CHIEF, TRANSPORTATION ENGINEERING AND CONSTRUCTION

DIRECTOR, DEPARTMENT OF TRANSPORTATION

CITY OF BALTIMORE
DEPARTMENT OF TRANSPORTATION
TRANSPORTATION ENGINEERING AND CONSTRUCTION

ISSUED	REVISED	REVISED
8 / 2010		

MONOLITHIC CONCRETE MEDIAN TYPE 'B'

STANDARD NO. BC 645.02

SCALE : NONE

SHEET 1 OF 1

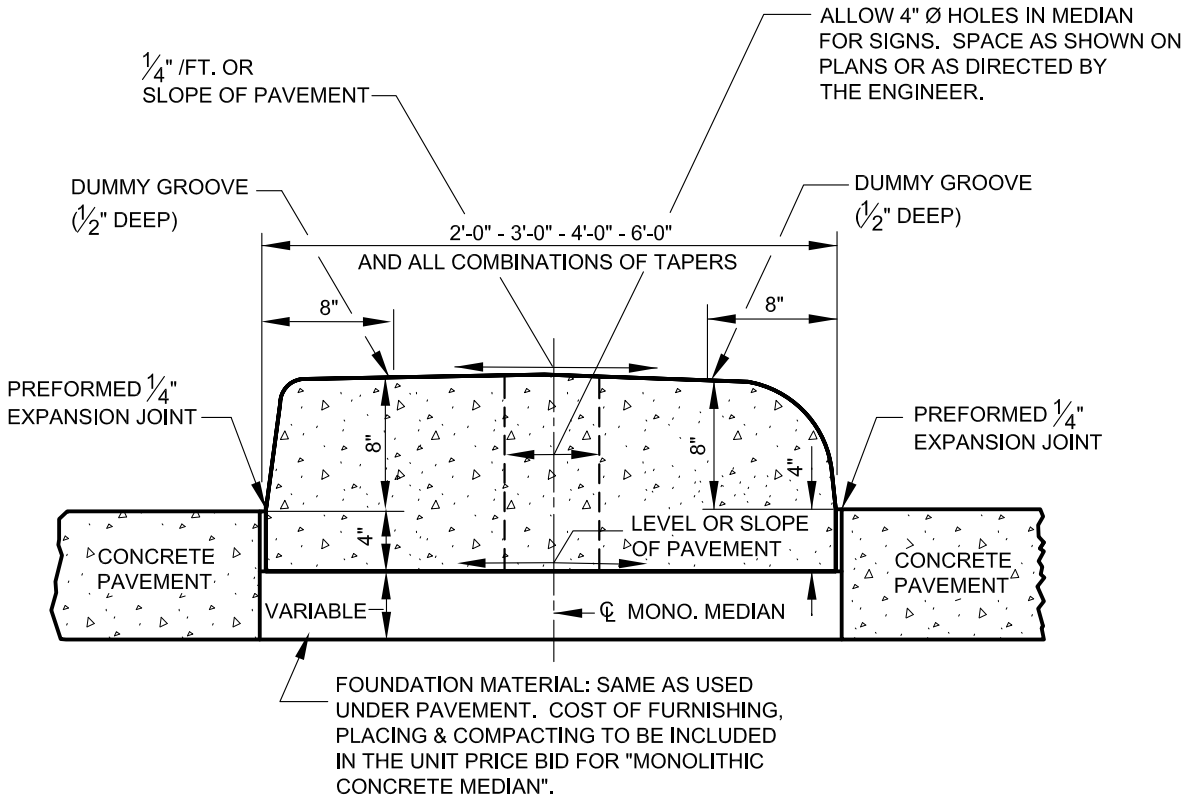

MONOLITHIC CONCRETE MEDIAN
TYPE 'C'

USE WITH RIGID PAVEMENT

NOTES

1. ON BOTH SIDES OF MEDIAN, USE CURB FACE TYPE 'A' OR TYPE 'A' MOD. AS CALLED FOR ON PLANS. (SEE BC 620.01, BC 645.04 AND BC 645.05)

2. JOINTS WILL BE SPACED 10'-0" APART (SIMILAR TO JOINTS FOR CONCRETE CURBS AND COMBINATION CURB & GUTTER). PROVIDE A DUMMY GROOVE (1/2" DEEP) AT 5-FOOT INTERVALS BETWEEN JOINTS.

3. SPECIFICATIONS FOR CONCRETE CURB AND COMBINATION CONCRETE CURB & GUTTER WILL APPLY.

CITY OF BALTIMORE 1797	APPROVED: Bernard DeVoy Jr. DIVISION CHIEF, TRANSPORTATION ENGINEERING AND CONSTRUCTION. Khalil Zaied DIRECTOR, DEPARTMENT OF TRANSPORTATION	CITY OF BALTIMORE DEPARTMENT OF TRANSPORTATION TRANSPORTATION ENGINEERING AND CONSTRUCTION	ISSUED	REVISED	REVISED
			8 / 2010		
		MONOLITHIC CONCRETE MEDIAN TYPE 'C'	STANDARD NO. BC 645.03		
			SCALE : NONE	SHEET 1 OF 1	

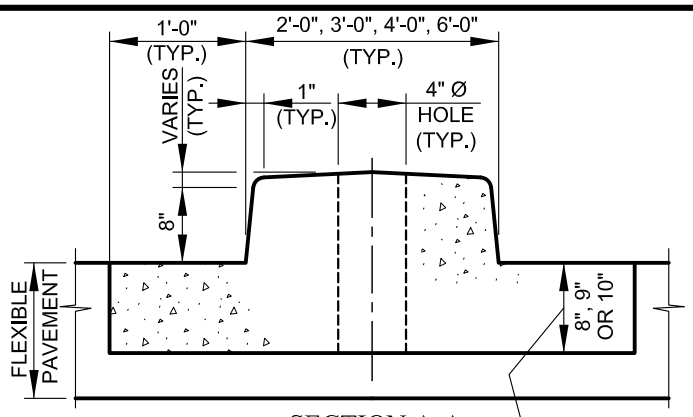

SECTION A-A
TYPE A-1
PLACED WITH HOT MIX ASPHALT PAVEMENT

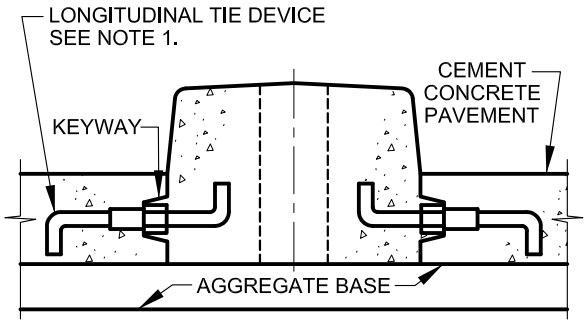

SECTION A-A
TYPE A-2
PLACED WITH CEMENT CONCRETE PAVEMENT

DEPTH OF GUTTER PAN TO MATCH LAMINATIONS OF PROPOSED PAVING SECTION AS CLOSELY AS POSSIBLE

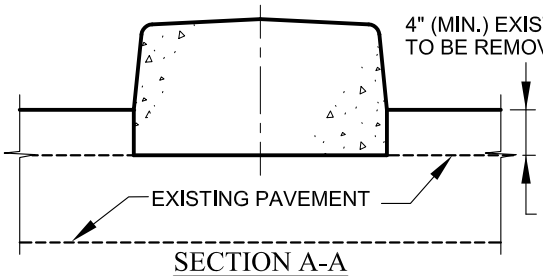

SECTION A-A
TYPE A-3
PLACED IN COMBINATION WITH PAVEMENT RESURFACING

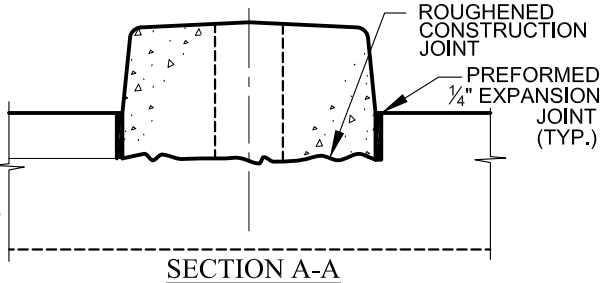

SECTION A-A
TYPE A-4
PLACED ON EXISTING CONCRETE PAVEMENT

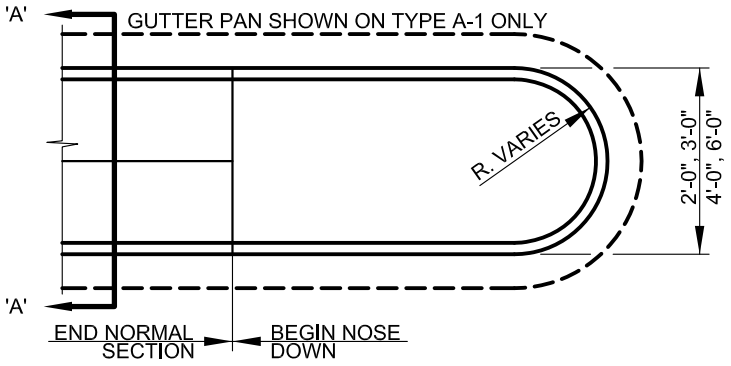

PLAN

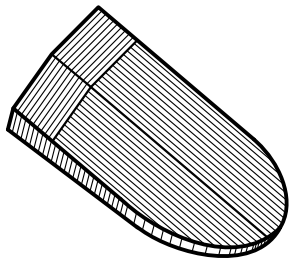

ISOMETRIC NOSE DOWN
(SHOWN WITHOUT GUTTER PAN)

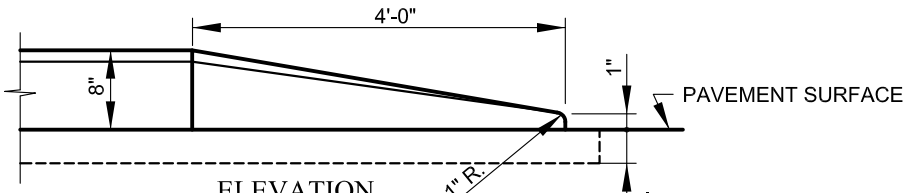

ELEVATION
NOSE DOWN AT APPROACH END OF MEDIAN

NOTES

1. UNLESS OTHERWISE SPECIFIED LONGITUDINAL TIE BAR DEVICE, TYPE 'A' OR TYPE 'B'. PLACED AT MIDDLE OF KEYWAY & SPACED ACCORDING TO SPECIFICATIONS FOR CONCRETE PAVEMENT SHALL BE USED AT CONSTRUCTION JOINT BETWEEN MONOLITHIC CONCRETE MEDIAN (OR GUTTER PAN) AND CONCRETE PAVEMENT, SEE STANDARD BC 572.61-1.
2. JOINT SPACING WILL BE A MAXIMUM OF 10'-0" APART. SEE SPECIFICATIONS FOR LOCATION AND DESCRIPTION OF TREATMENT FOR THE TYPES OF JOINTS USED. CONCRETE PAVEMENT, JOINTS SHALL MATCH PAVEMENT JOINTS.
3. ALLOW 4" Ø HOLES IN MEDIAN FOR SIGNS. SPACED AS SHOWN ON PLANS OR AS DIRECTED BY THE ENGINEER.

APPROVED :

DIVISION CHIEF, TRANSPORTATION ENGINEERING AND CONSTRUCTION

DIRECTOR, DEPARTMENT OF TRANSPORTATION

CITY OF BALTIMORE
DEPARTMENT OF TRANSPORTATION
TRANSPORTATION ENGINEERING AND CONSTRUCTION

ISSUED	REVISED	REVISED
8 / 2010		

STANDARD MONOLITHIC CONCRETE MEDIAN TYPE 'A'

STANDARD NO.
BC 645.04

SCALE : NONE

SHEET 1 OF 1

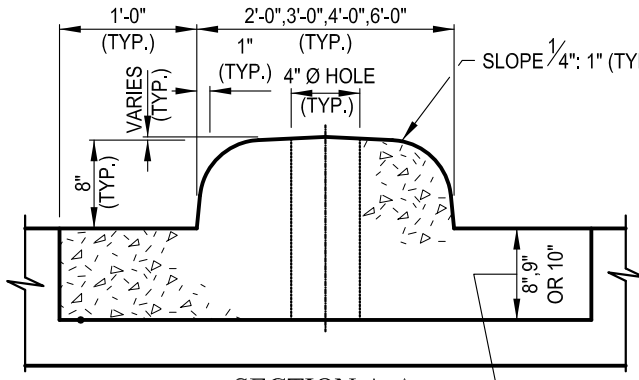

SECTION A-A
TYPE A-1 (MOD)
PLACED WITH HOT MIX ASPHALT PAVEMENT

DEPTH OF GUTTER PAN TO MATCH LAMINATIONS OF PROPOSED PAVING SECTION AS CLOSELY AS POSSIBLE

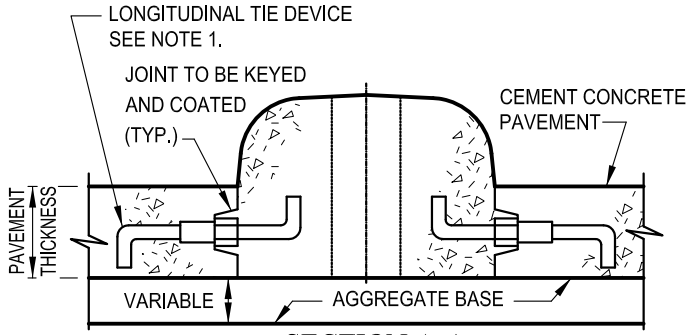

SECTION A-A
TYPE A-2 (MOD)
PLACED WITH CEMENT CONCRETE PAVEMENT

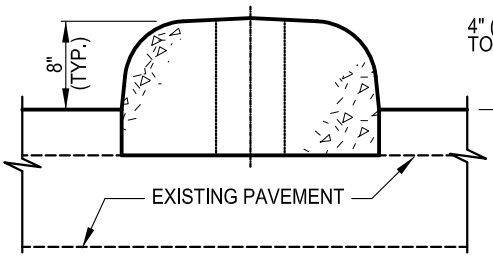

SECTION A-A
TYPE A-3 (MOD)
PLACED IN COMBINATION WITH PAVEMENT RESURFACING

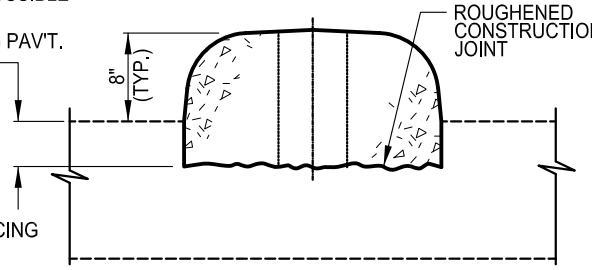

SECTION A-A
TYPE A-4 (MOD)
PLACED ON EXISTING PAVEMENT

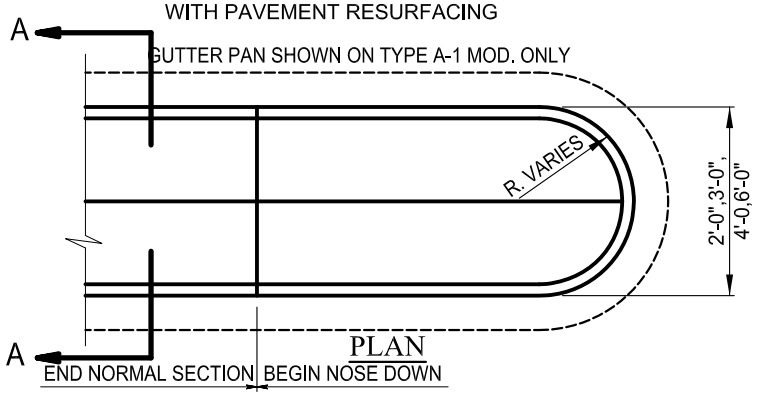

PLAN

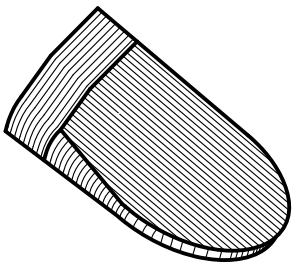

ISOMETRIC-NOSE DOWN
(SHOWN WITHOUT GUTTER PAN)

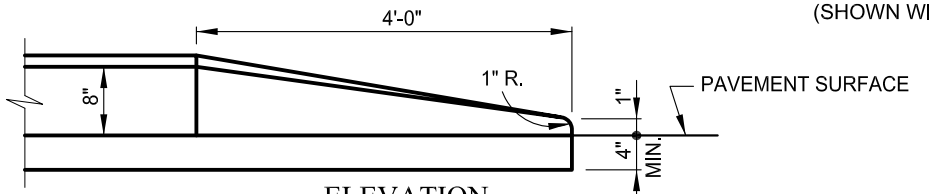

ELEVATION
NOSE DOWN AT APPROACH END OF MEDIAN

NOTES

1. UNLESS OTHERWISE SPECIFIED LONGITUDINAL TIE BAR DEVICE, TYPE 'A' OR TYPE 'B', PLACED AT MIDDLE OF KEYWAY & SPACED ACCORDING TO SPECIFICATIONS FOR CONCRETE PAVEMENT SHALL BE USED AT CONSTRUCTION JOINT BETWEEN MONOLITHIC CONCRETE MEDIAN (OR GUTTER PAN) AND CONCRETE PAVEMENT. SEE STANDARD BC 572.61-1.
2. JOINT SPACING WILL BE A MAXIMUM OF 10'-0" APART. SEE SPECIFICATIONS FOR LOCATION AND DESCRIPTION OF TREATMENT FOR THE TYPES OF JOINTS USED. CONCRETE PAVEMENT. JOINTS SHALL MATCH PAVEMENT JOINTS.
3. ALLOW 4" Ø HOLES IN MEDIAN FOR SIGNS. SPACED AS SHOWN ON PLANS OR AS DIRECTED BY THE ENGINEER.

APPROVED:

DIVISION CHIEF, TRANSPORTATION ENGINEERING AND CONSTRUCTION

DIRECTOR, DEPARTMENT OF TRANSPORTATION

CITY OF BALTIMORE
DEPARTMENT OF TRANSPORTATION
TRANSPORTATION ENGINEERING AND CONSTRUCTION

ISSUED	REVISED	REVISED
8 / 2010		

STANDARD MONOLITHIC CONCRETE MEDIAN TYPE 'A' MODIFIED

STANDARD NO.
BC 645.05

SCALE : NONE

SHEET 1 OF 1

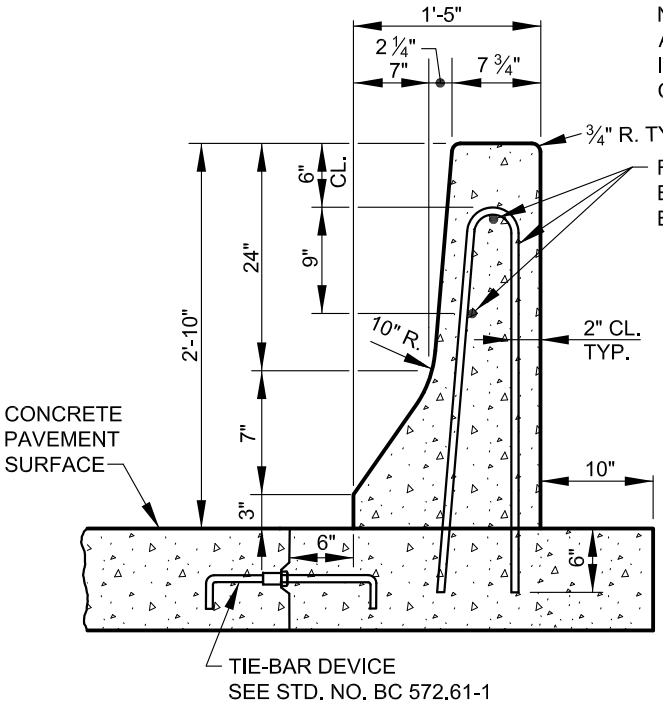

NOTE: EPOXY COATING IS TO BE NOTED ON THE PLANS AND SHALL BE INCLUDED IN THE BID PRICE FOR THE ITEM "STANDARD CONCRETE BARRIER". STANDARD CONCRETE BARRIER TO BE FIELD CONSTRUCTED.

REINFORCEMENT: VERTICAL SHALL BE NO. 4 BARS BENT AND SPACED AT 18" C/C. HORIZONTAL SHALL BE 2 CONTINUOUS NO. 5 BARS SPACED AS SHOWN.

NOTES

1. THE BARRIER SHALL BE FIELD CONSTRUCTED USING CONCRETE MIX NO. 6 CONTINUOUSLY PLACED.
2. THE BARRIER SHALL BE CAST USING THE FIXED FORM OR THE SLIP FORM CONSTRUCTION METHOD.
3. ALL REINFORCEMENT BARS, INCLUDING ENDS, SHALL BE EPOXY COATED. ALL BAR LAPS TO BE 30 BAR DIAMETERS. TIE BARS TOGETHER. ALL BARS SHALL BE ASTM A 615 GRADE 60.
4. SPACING OF CONTRACTION JOINTS SHALL BE 20 FEET REGARDLESS OF CONSTRUCTION METHOD.
5. COST OF LABOR, ALL REINFORCEMENT, DRILLED HOLES, GROUT, EQUIPMENT, ETC., SHALL BE INCIDENTAL TO THE CONTRACT UNIT PRICE PER LINEAR FOOT FOR 34 INCH F SHAPE CONCRETE TRAFFIC BARRIER SINGLE FACE CONSTRUCTED ON NEW CONCRETE PAVEMENT.
6. TO BE USED AS FREE STANDING BARRIER ONLY (NO BACKING).
7. TOLERANCES IN DIMENSIONS SHOWN SHALL BE WITHIN ¼".
8. CONDUIT: IF REQUIRED REFER TO STD. SHA 648.50 FOR LOCATION.
9. WHEN BARRIER IS CONSTRUCTED USING THE SLIP FORM METHOD DIAGONAL NO. 4 BARS ARE REQUIRED. SEE STD. BC 648.07.

NEW CONSTRUCTION

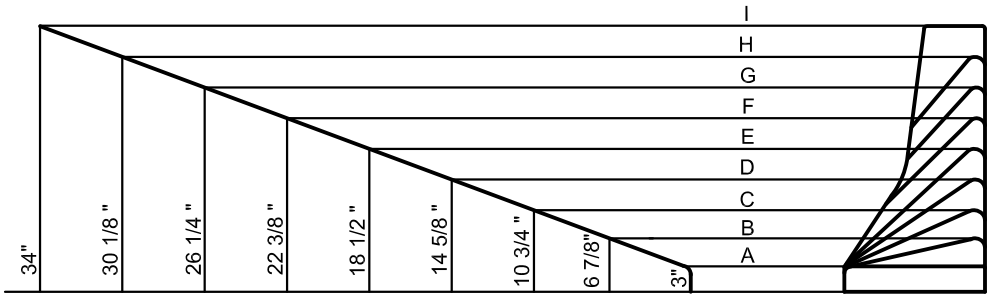

TERMINUS TRANSITION



PLAN

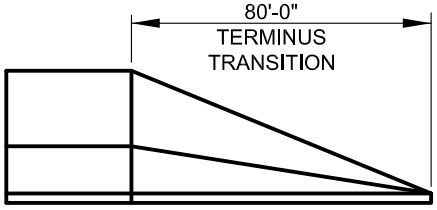

ELEVATION

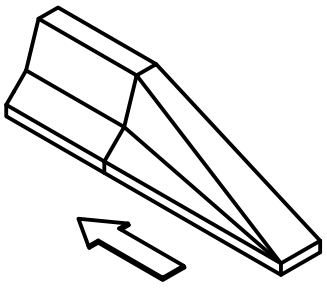

ISOMETRIC

APPROVED:

DIVISION CHIEF, TRANSPORTATION ENGINEERING AND CONSTRUCTION

DIRECTOR, DEPARTMENT OF TRANSPORTATION

CITY OF BALTIMORE
DEPARTMENT OF TRANSPORTATION
TRANSPORTATION ENGINEERING AND CONSTRUCTION

34 INCH F SHAPE CONCRETE BARRIER SINGLE FACE ON NEW CONCRETE PAVEMENT

ISSUED	REVISED	REVISED
8 / 2010		

STANDARD NO. BC 648.01

SCALE : NONE

SHEET 1 OF 1

NOTE: EPOXY COATING IS TO BE NOTED ON THE PLANS AND SHALL BE INCLUDED IN THE BID PRICE FOR THE ITEM "STANDARD CONCRETE BARRIER".

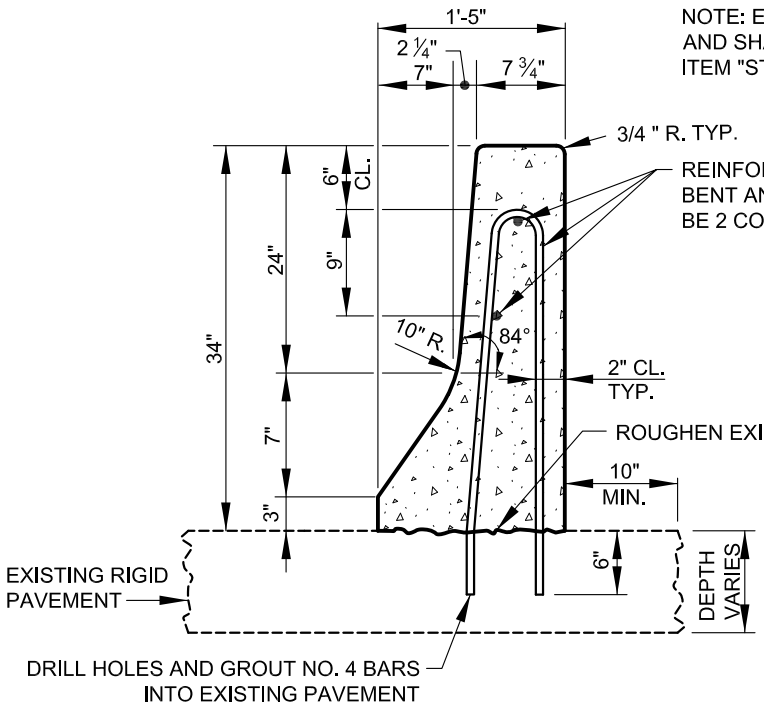

TYPICAL SECTION

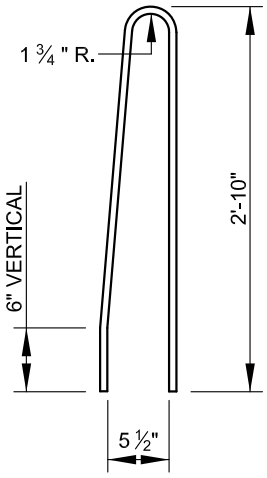

NO. 4 BAR

NOTES

1. THE BARRIER SHALL BE FIELD CONSTRUCTED USING CONCRETE MIX NO. 6 CONTINUOUSLY PLACED.
2. THE BARRIER SHALL BE CAST USING THE FIXED FORM OR THE SLIP FORM CONSTRUCTION METHOD.
3. ALL REINFORCEMENT BARS, INCLUDING ENDS, SHALL BE EPOXY COATED. ALL BAR LAPS TO BE 30 BAR DIAMETERS. TIE BARS TOGETHER. ALL BARS SHALL BE ASTM A 615 GRADE 60.
4. SPACING OF CONTRACTION JOINTS SHALL BE 20 FEET REGARDLESS OF CONSTRUCTION METHOD.
5. COST OF LABOR, ALL REINFORCEMENT, DRILLED HOLES, GROUT, EQUIPMENT, ETC., SHALL BE INCIDENTAL TO THE CONTRACT UNIT PRICE PER LINEAR FOOT FOR 34 INCH F SHAPE CONCRETE TRAFFIC BARRIER SINGLE FACE CONSTUCTED ON EXISTING CONCRETE PAVEMENT.
6. TO BE USED AS FREE STANDING BARRIER ONLY (NO BACKING).
7. TOLERANCES IN DIMENSIONS SHOWN SHALL BE WITHIN ¼".
8. CONDUIT: IF REQUIRED REFER TO STD. SHA 648.50 FOR LOCATION.
9. WHEN BARRIER IS CONSTRUCTED USING THE SLIP FORM METHOD DIAGONAL NO. 4 BARS ARE REQUIRED. SEE STD. BC 648.07.

NOTE: SEE STD. NO. BC 648.01 FOR OTHER DETAILS OF CONCRETE BARRIER TRANSITION.

APPROVED:

DIVISION CHIEF, TRANSPORTATION ENGINEERING AND CONSTRUCTION

DIRECTOR, DEPARTMENT OF TRANSPORTATION

CITY OF BALTIMORE
DEPARTMENT OF TRANSPORTATION
TRANSPORTATION ENGINEERING AND CONSTRUCTION

ISSUED	REVISED	REVISED
8 / 2010		

34 INCH F SHAPE CONCRETE BARRIER SINGLE FACE ON EXISTING CONCRETE PAVEMENT

STANDARD NO.
BC 648.02

SCALE : NONE | SHEET 1 OF 1

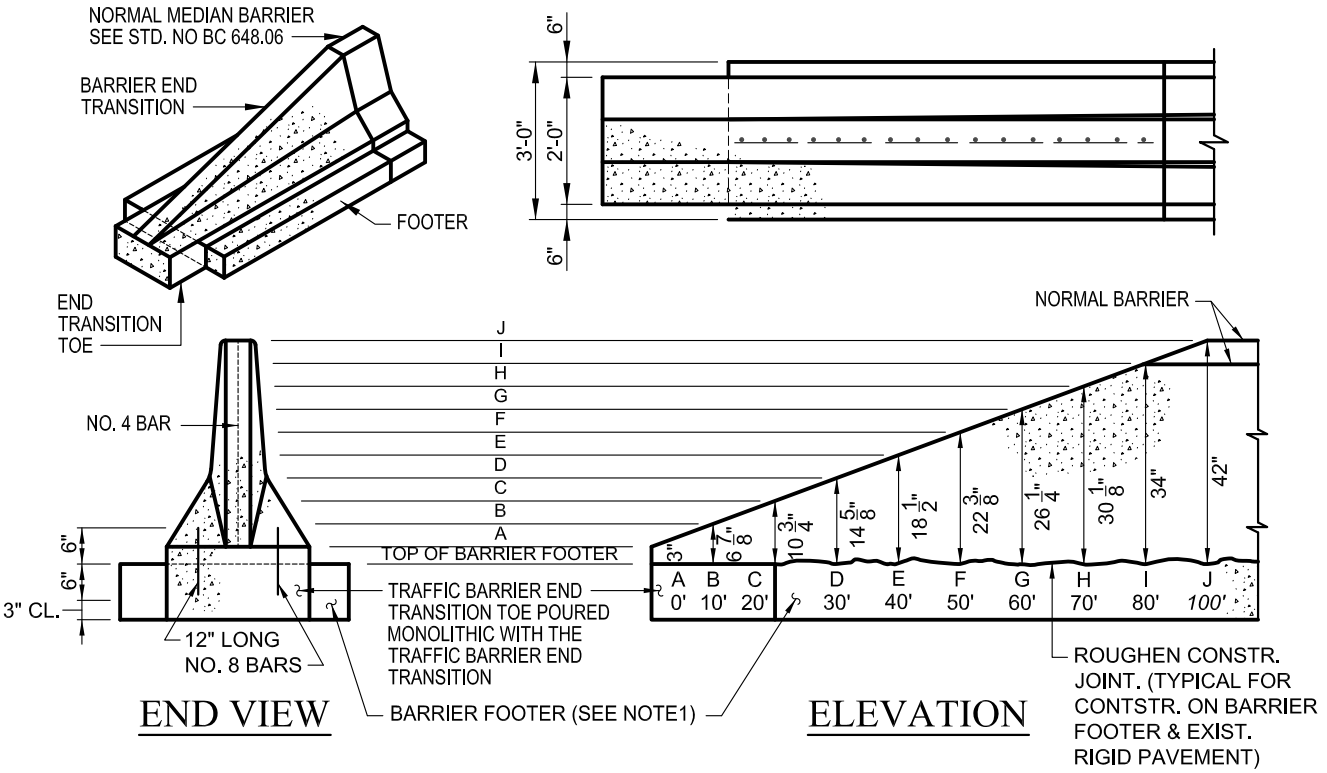

END VIEW

ELEVATION

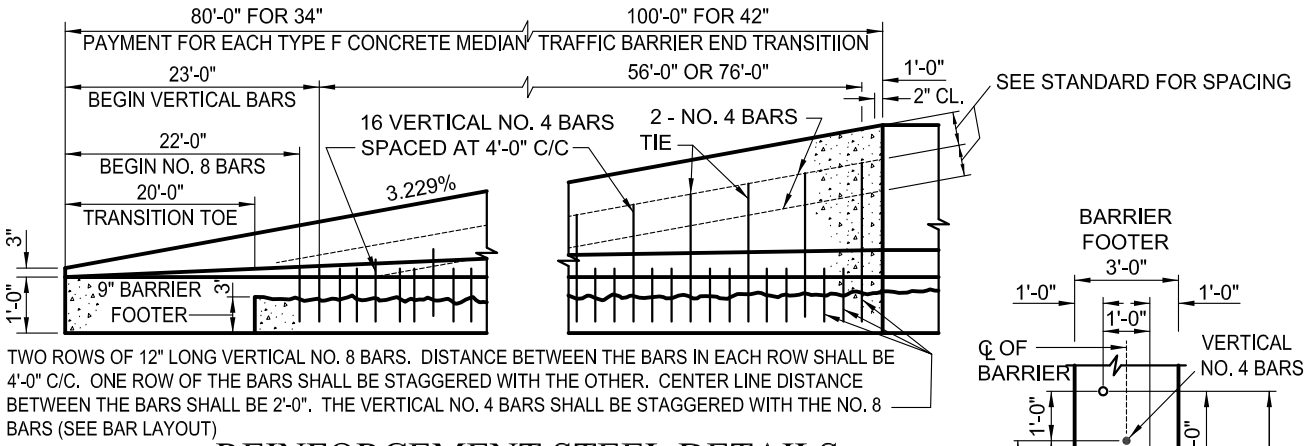

TWO ROWS OF 12" LONG VERTICAL NO. 8 BARS. DISTANCE BETWEEN THE BARS IN EACH ROW SHALL BE 4'-0" C/C. ONE ROW OF THE BARS SHALL BE STAGGERED WITH THE OTHER. CENTER LINE DISTANCE BETWEEN THE BARS SHALL BE 2'-0". THE VERTICAL NO. 4 BARS SHALL BE STAGGERED WITH THE NO. 8 BARS (SEE BAR LAYOUT)

REINFORCEMENT STEEL DETAILS

PLAN VIEW
END TRANSITION
BAR LAYOUT

NOTES

1. THE TRAFFIC BARRIER END TRANSITION SHALL BE CONSTRUCTED USING THE FIXED FORM METHOD. NO FOOTER IS REQUIRED WHEN BARRIER IS CONSTRUCTED ON EXISTING RIGID PAVEMENT. BARRIER AND FOOTER SHALL BE CAST SEPARATELY. MONOLITHIC PLACEMENT NOT PERMITTED. SEE STD. BC 648.06 FOR OTHER BARRIER DETAILS.
2. THE TRAFFIC BARRIER END TRANSITION BARRIER FOOTER SHALL BE CONSTUCTED USING CONCRETE MIX NO. 6 (4500 PSI).
3. ALL REINFORCEMENT BARS, INCLUDING ENDS AND TIES, SHALL BE EPOXY COATED. ALL BAR LAPS TO BE 30 BAR DIAMETERS. TIE BARS TOGETHER.
4. THIS TRAFFIC BARRIER END TRANSITION IS PROHIBITED WHEN THE DESIGN SPEED IS 45 MPH OR GREATER. THE ENGINEER MUST DETERMINE THE TYPE OF END TREATMENT FOR DESIGN SPEEDS OVER 45 MPH.
5. COST OF THE CONCRETE BARRIER FOOTER (IF REQUIRED) SHALL BE INCIDENTAL TO THE CONTRACT UNIT PRICE PER EACH FOR THE 34 INCH OR 42 INCH F SHAPE CONCRETE MEDIAN TRAFFIC BARRIER END TRANSITION.
6. WHEN THE BARRIER END TRANSITION IS CONSTRUCTED ON EXISTING RIGID PAVEMENT, THE COST OF ROUGHENING THE PAVEMENT SURFACE, EXCAVATION FOR TRANSITION TOE, REINFORCEMENT, DRILLED HOLES, GROUT, LABOR, TOOLS, EQUIPMENT, ETC., SHALL BE INCIDENTAL TO THE CONTRACT UNIT PRICE PER EACH FOR THE ITEMS SPECIFIED IN NOTE 5.
7. TOLERANCES IN DIMENSIONS SHOWN SHALL BE WITHIN 1/4".

APPROVED :

DIVISION CHIEF, TRANSPORTATION ENGINEERING AND CONSTRUCTION

DIRECTOR, DEPARTMENT OF TRANSPORTATION

CITY OF BALTIMORE
DEPARTMENT OF TRANSPORTATION
TRANSPORTATION ENGINEERING AND CONSTRUCTION

ISSUED	REVISED	REVISED
8 / 2010		

42 INCH F SHAPE CONCRETE MEDIAN TRAFFIC BARRIER END TRANSITION

STANDARD NO.
BC 648.03

SCALE : NONE

SHEET 1 OF 1

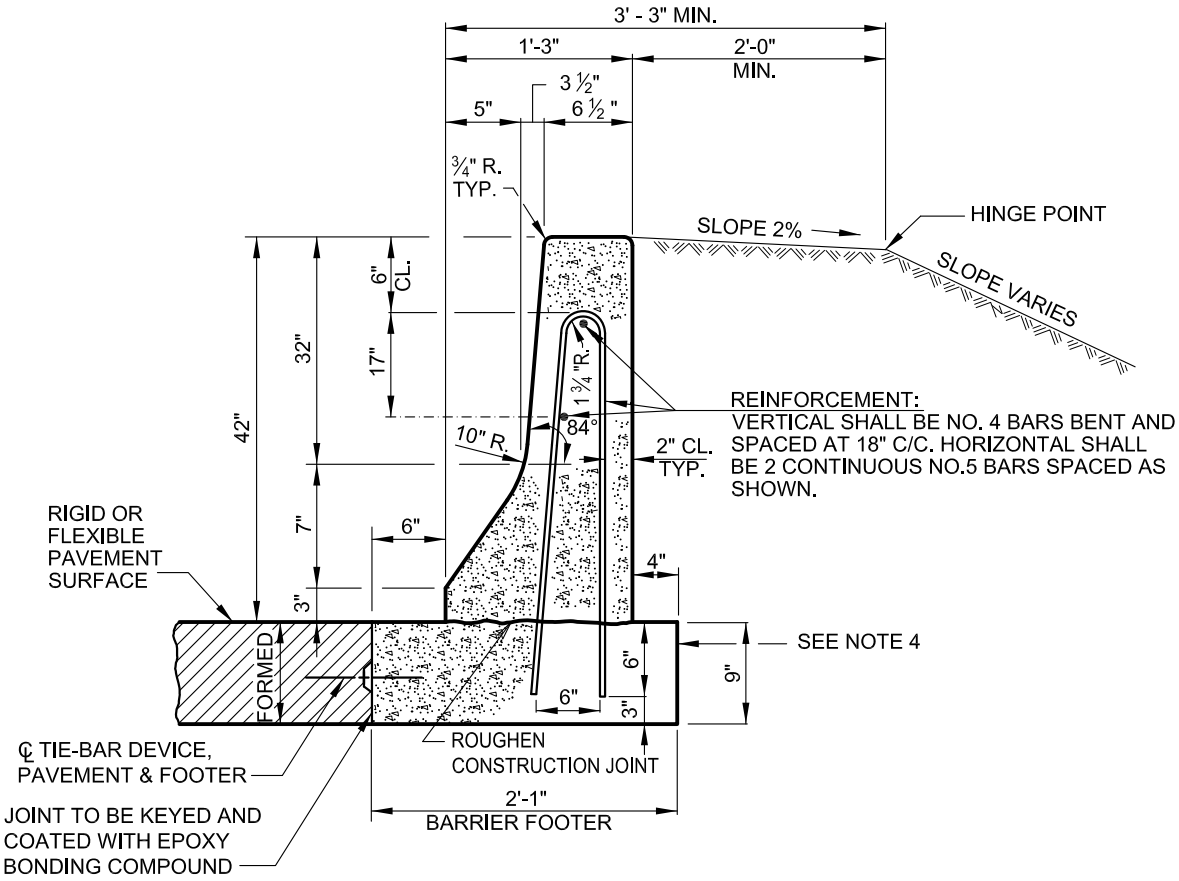

NOTE
NEW OR EXISTING CONCRETE SURFACE REQUIRES TIE-BAR DEVICE. SEE STD. NO. BC 572.61-1.

TYPICAL SECTION

TO BE USED WITH EARTH BACKING AT THE TOP OF FILL SLOPES.
(SEE STD. BC 648.05 FOR 42" TYPE F CONCRETE TRAFFIC BARRIER SINGLE FACE TYPE 2 FREE STANDING AT TOP OF FILL SLOPES)

NOTES

1. THE BARRIER AND FOOTER SHALL BE CAST SEPARATELY USING THE FIXED FORM OR THE SLIP FORM CONSTRUCTION METHOD USING CONCRETE MIX NO. 6 (4500 PSI) CONTINUOUSLY PLACED.
2. THE CONTRACTOR HAS THE OPTION TO CONSTRUCT THE BARRIER FOOTER AND BARRIER BEFORE OR AFTER CONSTRUCTION OF THE PAVEMENT. IF DONE BEFORE, THE FOOTER FORM AT THE PAVEMENT EDGE SHALL BE REMOVED BEFORE PLACING PAVEMENT.
3. ALL REINFORCEMENT BARS, INCLUDING ENDS, SHALL BE EPOXY COATED. ALL BAR LAPS TO BE 30 BAR DIAMETERS. TIE BARS TOGETHER. ALL REINFORCEMENT BARS SHALL BE ASTM A615 GRADE 60.
4. THE FOOTER REAR VERTICAL WALL SHALL BE FORMED OR THE CONCRETE PLACED AGAINST THE VERTICAL EARTH SIDE IF APPROVED BY THE ENGINEER. NO ADDITIONAL COMPENSATION FOR ADDITIONAL CONCRETE WILL BE PAID IF CONCRETE IS PLACED AGAINST THE EARTH. THE BARRIER FOOTER SHALL HAVE CONSTRUCTION JOINTS TO COINCIDE WITH THE BARRIER JOINTS.
5. SPACING OF CONTRACTION JOINTS SHALL BE 20 FEET REGARDLESS OF CONSTRUCTION METHOD.
6. COST OF THE CONCRETE FOOTER, ALL REINFORCEMENT AND EXCAVATION SHALL BE INCIDENTAL TO THE CONTRACT UNIT PRICE PER LINEAR FOOT FOR 42 INCH F SHAPE CONCRETE TRAFFIC BARRIER SINGLE FACE TYPE 1. FILL MATERIAL IN BACK OF THE BARRIER IS INCLUDED IN THE EMBANKMENT QUANTITY.
7. TOLERANCES IN DIMENSIONS SHOWN SHALL BE WITHIN ¼".
8. WHEN BARRIER IS CONSTRUCTED USING THE SLIP FORM METHOD, DIAGONAL NO. 4 REINFORCEMENT BARS ARE REQUIRED. SEE STD. BC 648.07.

APPROVED:
DIVISION CHIEF, TRANSPORTATION ENGINEERING AND CONSTRUCTION
DIRECTOR, DEPARTMENT OF TRANSPORTATION

CITY OF BALTIMORE
DEPARTMENT OF TRANSPORTATION
TRANSPORTATION ENGINEERING AND CONSTRUCTION

ISSUED	REVISED	REVISED
8 / 2010		

42 INCH F SHAPE CONCRETE TRAFFIC BARRIER SINGLE FACE TYPE 1 (WITH EARTH BACKING IN FILL)

STANDARD NO.
BC 648.04

SCALE : NONE | SHEET 1 OF 1

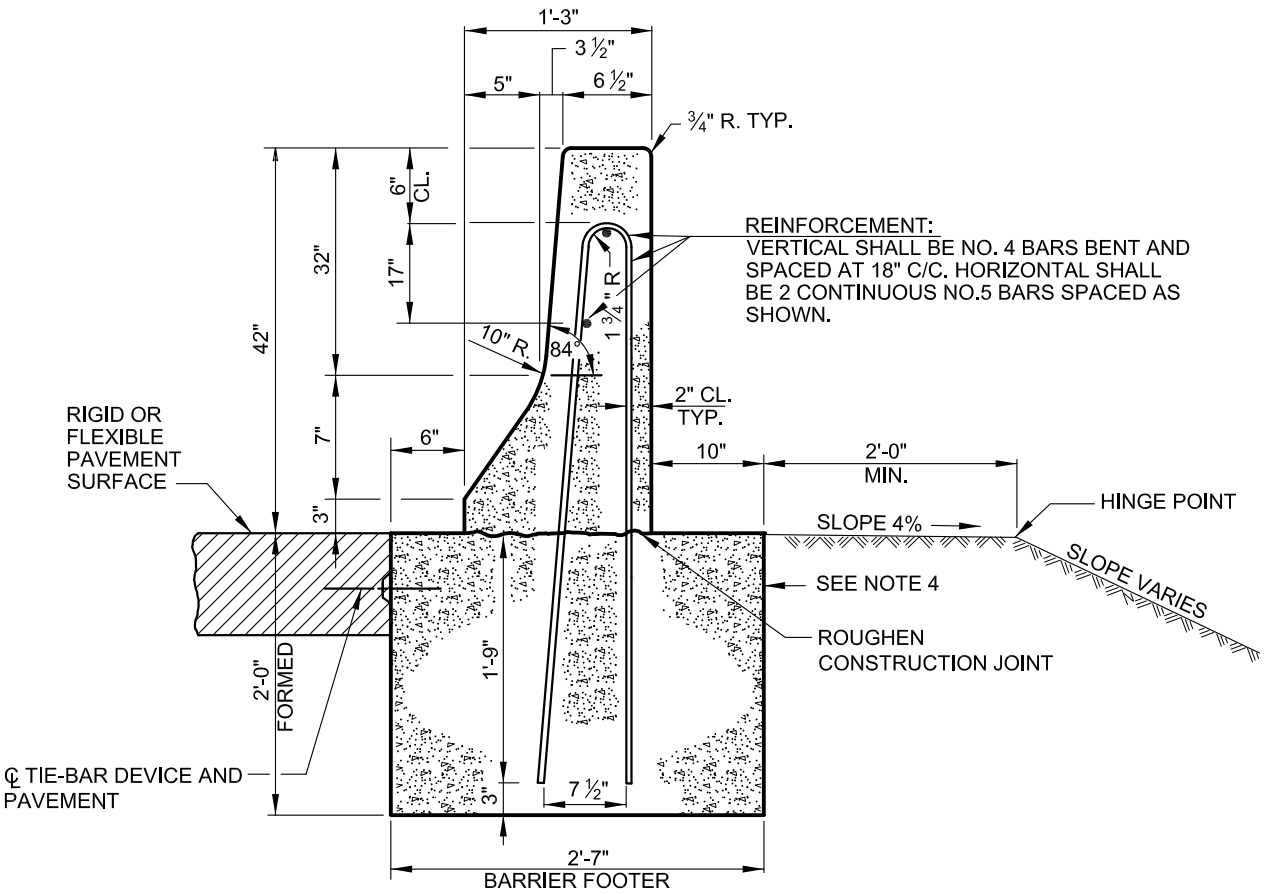

NOTE
NEW OR EXISTING CONCRETE SURFACE REQUIRES TIE-BAR DEVICE. SEE STD. NO. BC 572.61-1.

TYPICAL SECTION

(SEE STD. BC 648.04 FOR 42" TYPE F CONCRETE TRAFFIC BARRIER SINGLE FACE TYPE 1 FREE STANDING AT TOP OF FILL SLOPES)

NOTES

1. THE BARRIER AND FOOTER SHALL BE CAST SEPARATELY USING THE FIXED FORM OR THE SLIP FORM CONSTRUCTION METHOD USING CONCRETE MIX NO. 6 (4500 PSI) CONTINUOUSLY PLACED.
2. THE CONTRACTOR HAS THE OPTION TO CONSTRUCT THE BARRIER FOOTER AND BARRIER BEFORE OR AFTER CONSTRUCTION OF THE PAVEMENT. IF THE FOOTER FORMS ARE INITIALLY USED, THEY SHALL BE REMOVED BEFORE PLACING PAVEMENT.
3. ALL REINFORCEMENT BARS, INCLUDING ENDS, SHALL BE EPOXY COATED. ALL BAR LAPS TO BE 30 BAR DIAMETERS. TIE BARS TOGETHER. ALL REINFORCEMENT BARS SHALL BE ASTM A615 GRADE 60.
4. THE REAR VERTICAL WALL SHALL BE FORMED OR THE CONCRETE PLACED AGAINST THE VERTICAL EARTH SIDE IF APPROVED BY THE ENGINEER. NO ADDITIONAL COMPENSATION FOR ADDITIONAL CONCRETE WILL BE PAID IF CONCRETE IS PLACED AGAINST THE EARTH. THE BARRIER FOOTER SHALL HAVE CONSTRUCTION JOINTS TO COINCIDE WITH THE BARRIER JOINTS.
5. SPACING OF CONTRACTION JOINTS SHALL BE 20 FEET REGARDLESS OF CONSTRUCTION METHOD.
6. COST OF THE CONCRETE FOOTER, ALL REINFORCEMENT AND EXCAVATION SHALL BE INCIDENTAL TO THE CONTRACT UNIT PRICE PER LINEAR FOOT FOR 42 INCH F SHAPE CONCRETE TRAFFIC BARRIER SINGLE FACE TYPE 2.
7. TOLERANCES IN DIMENSIONS SHOWN SHALL BE WITHIN ¼".
8. WHEN BARRIER IS CONSTRUCTED USING THE SLIP FORM METHOD, DIAGONAL NO. 4 REINFORCEMENT BARS ARE REQUIRED. SEE STD. BC 648.07.

APPROVED:
DIVISION CHIEF, TRANSPORTATION ENGINEERING AND CONSTRUCTION
DIRECTOR, DEPARTMENT OF TRANSPORTATION

CITY OF BALTIMORE
DEPARTMENT OF TRANSPORTATION
TRANSPORTATION ENGINEERING AND CONSTRUCTION

ISSUED	REVISED	REVISED
8 / 2010		

42 INCH F SHAPE CONCRETE TRAFFIC BARRIER SINGLE FACE TYPE 2 (FREE STANDING IN FILL)

STANDARD NO. BC 648.05

SCALE : NONE | SHEET 1 OF 1

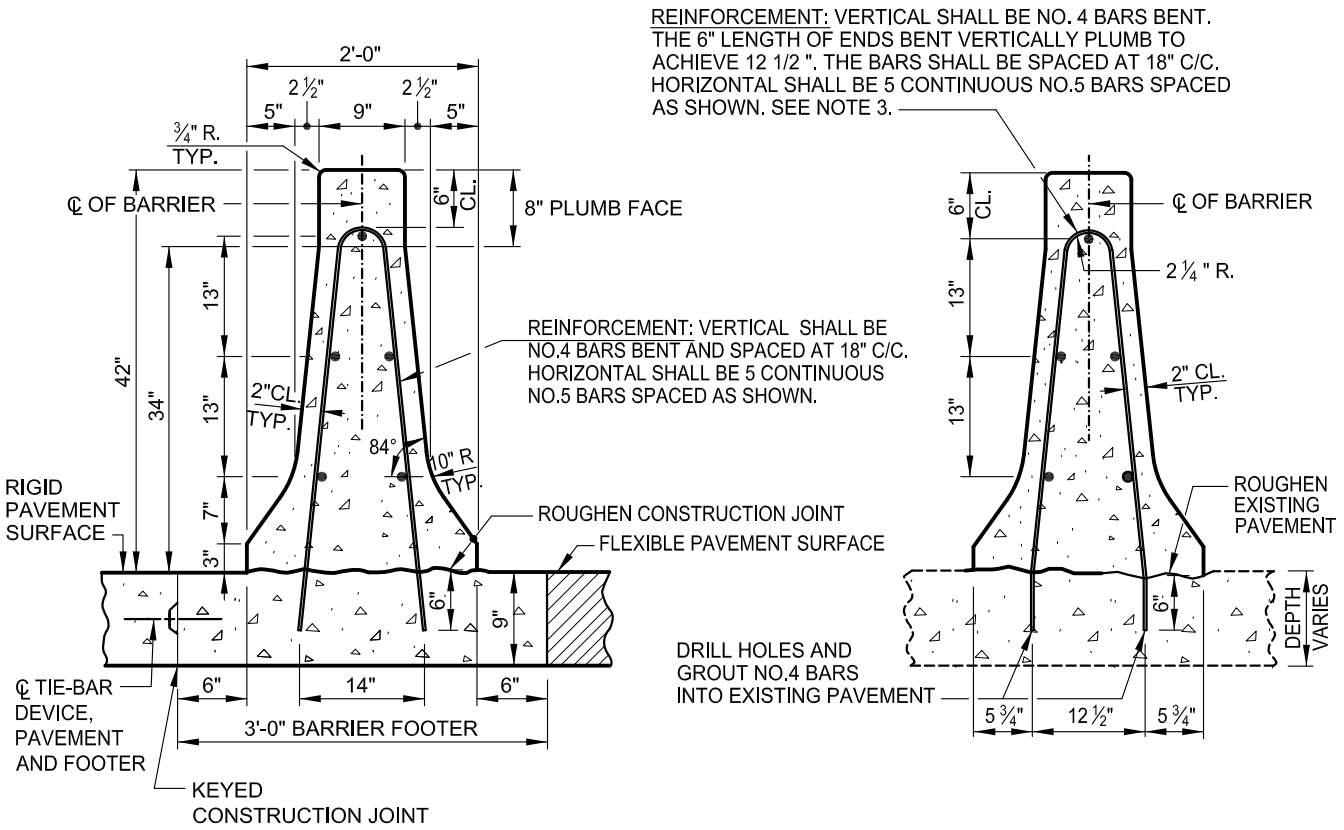

RIGID PAVING
(HALF SECTION)

FLEXIBLE PAVING
(HALF SECTION, SEE NOTE 9)

CONSTRUCTION ON EXISTING RIGID PAVEMENT
(BARRIER FOOTER IS REQUIRED FOR EXISTING FLEXIBLE PAVEMENT)

NEW CONSTRUCTION
(OR CONSTRUCTION ON EXISTING FLEXIBLE PAVEMENT)

NOTE: NEW OR EXISTING CONCRETE SURFACE REQUIRES TIE-BAR DEVICE. SEE STD. NO. BC 572.61-1.

NOTES

1. THE BARRIER AND FOOTER SHALL BE CAST SEPARATELY USING THE FIXED FORM OR THE SLIP FORM CONSTRUCTION METHOD USING CONCRETE MIX NO. 6 (4500 PSI).
2. THE CONTRACTOR HAS THE OPTION TO CONSTRUCT THE BARRIER FOOTER AND BARRIER BEFORE OR AFTER CONSTRUCTION OF THE PAVEMENT. THE FOOTER FORMS, IF USED, SHALL BE REMOVED IF THE BARRIER AND FOOTER ARE CONSTRUCTED BEFORE THE PAVEMENT.
3. WHEN THE BARRIER IS CONSTRUCTED USING THE SLIP FORM METHOD, DIAGONAL NO. 4 REINFORCEMENT BARS ARE REQUIRED. SEE STD. NO. BC 648.07.
4. ALL REINFORCEMENT BARS, INCLUDING ENDS, SHALL BE EPOXY COATED. ALL BAR LAPS TO BE 30 BAR DIAMETERS. TIE BARS TOGETHER. ALL REINFORCEMENT BARS SHALL BE ASTM A615 GRADE 60.
5. SPACING OF CONTRACTION JOINTS SHALL BE 20 FEET REGARDLESS OF CONSTRUCTION METHOD.
6. COST OF THE CONCRETE FOOTER, ALL REINFORCEMENT AND EXCAVATION SHALL BE INCIDENTAL TO THE CONTRACT UNIT PRICE PER LINEAR FOOT FOR 42 INCH F SHAPE CONCRETE MEDIAN TRAFFIC BARRIER.
7. WHEN THE BARRIER IS CONSTRUCTED ON EXISTING RIGID PAVEMENT THE COST OF ALL REINFORCEMENT, DRILLED HOLES, GROUT, LABOR, TOOLS, EQUIPMENT, ETC. SHALL BE INCIDENTAL TO THE PRICE PER LINEAR FOOT FOR THE ITEM SPECIFIED IN NOTE 6.
8. TOLERANCES IN DIMENSIONS SHOWN SHALL BE WITHIN ¼".
9. WHEN THE BARRIER IS TO BE CONSTRUCTED ON EXISTING FLEXIBLE PAVEMENT, THE PAVEMENT SHALL BE SAW CUT FULL DEPTH. THE WIDTH FOR THE CONCRETE FOOTER SHALL BE AS INDICATED. THE COST FOR ALL SAW CUTS, PAVEMENT REMOVAL, AND ALL INCIDENTALS AND LABOR SHALL BE INCIDENTAL TO THE PRICE PER LINEAR FOOT FOR THE ITEM SPECIFIED IN NOTE 6.

APPROVED:

DIVISION CHIEF, TRANSPORTATION ENGINEERING AND CONSTRUCTION

DIRECTOR, DEPARTMENT OF TRANSPORTATION

CITY OF BALTIMORE
DEPARTMENT OF TRANSPORTATION
TRANSPORTATION ENGINEERING AND CONSTRUCTION

ISSUED	REVISED	REVISED
8 / 2010		

42 INCH F SHAPE CONCRETE MEDIAN TRAFFIC BARRIER

STANDARD NO. BC 648.06

SCALE : NONE

SHEET 1 OF 1

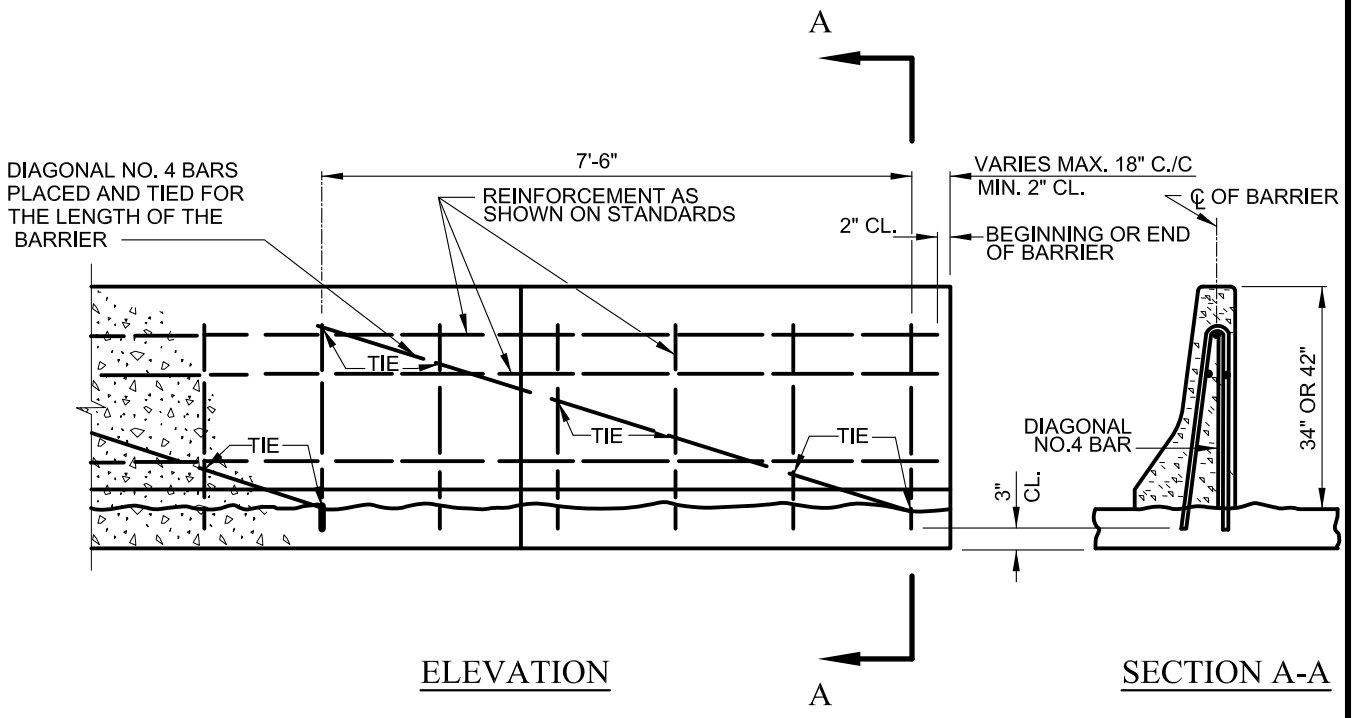

DIAGONAL BAR DETAILS

NOTES

1. APPLICABLE TO SLIP FORM CONSTRUCTION METHOD ONLY.
2. FOR BARRIER TYPES 1 AND 2 BARRIERS CONSTRUCTED ON EXISTING RIGID PAVEMENT.
3. DIAGONAL NO. 4 BARS SHALL BE ASTM A615 GRADE 60.
4. ALL REINFORCEMENT BARS INCLUDING ENDS AND TIES SHALL BE EPOXY COATED.
5. REFER TO STANDARDS FOR SPACING OF VERTICAL AND HORIZONTAL REINFORCEMENT.

APPROVED:

DIVISION CHIEF, TRANSPORTATION ENGINEERING AND CONSTRUCTION

DIRECTOR, DEPARTMENT OF TRANSPORTATION

CITY OF BALTIMORE
DEPARTMENT OF TRANSPORTATION
TRANSPORTATION ENGINEERING AND CONSTRUCTION

DIAGONAL BAR FOR SLIP FORMED 34 " OR 42 " F SHAPE SINGLE FACE CONCRETE TRAFFIC BARRIER

ISSUED	REVISED	REVISED
8 / 2010		

STANDARD NO. BC 648.07

SCALE : NONE

SHEET 1 OF 1

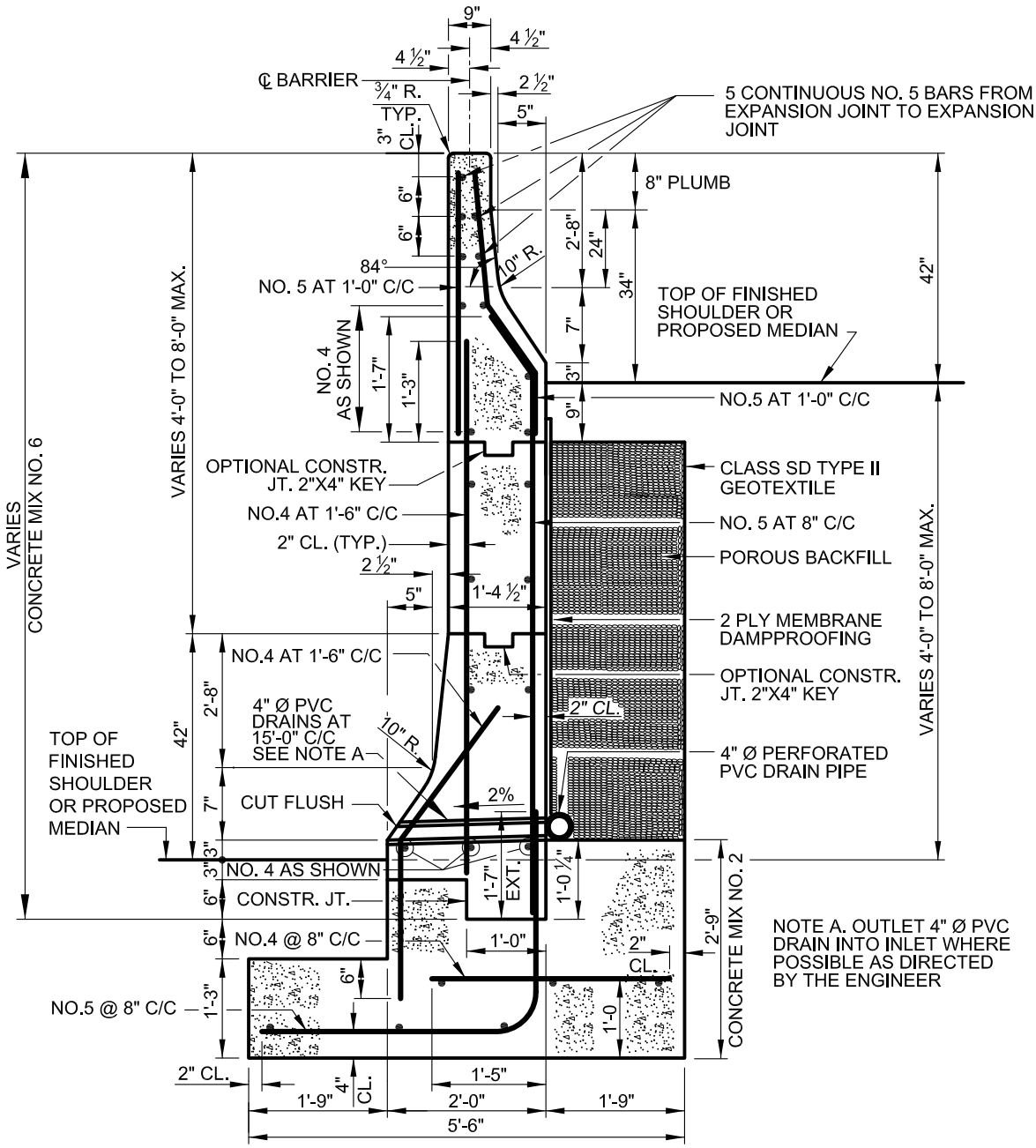

TYPICAL SECTION

NOTE A. OUTLET 4" Ø PVC DRAIN INTO INLET WHERE POSSIBLE AS DIRECTED BY THE ENGINEER

NOTES:

1. BARRIER SHALL BE CONSTRUCTED USING CONCRETE MIX NO. 6 (4500 PSI) AND THE FOOTER SHALL BE CONSTRUCTED USING CONCRETE MIX NO. 2 (3000 PSI). BARRIER AND FOOTER SHALL BE CAST SEPARATELY. MONOLITHIC PLACEMENT NOT PERMITTED.
2. ALL LONGITUDINAL BARS SHOWN WITHOUT SIZE SPECIFIED SHALL BE NO. 4 BARS AT 1'-6" C/C.
3. ALL REINFORCEMENT BARS, INCLUDING ENDS, SHALL BE EPOXY COATED. ALL BAR LAPS TO BE 30 BAR DIAMETERS. TIE BARS TOGETHER. ALL BARS SHALL BE ASTM A615, GRADE 60.
4. SEE STANDARD SHA MD 648.44-05 FOR CONTRACTION AND EXPANSION JOINTS.
5. COST OF THE CONCRETE FOOTER, ALL REINFORCEMENT, DRAINAGE APPURTENANCES, GEOTEXTILE, JOINT MATERIAL, EXCAVATION, BACKFILL, LABOR, TOOLS, EQUIPMENT, ETC. AND ALL INCIDENTALS SHALL BE INCLUDED IN THE CONTRACT UNIT PRICE PER LINEAR FOOT FOR 42 INCH F SHAPE CONCRETE MEDIAN TRAFFIC BARRIER BIFURCATED 4 FEET 0 INCHES TO 8 FEET 0 INCHES.
6. TOLERANCES IN DIMENSIONS SHOWN SHALL BE WITHIN ¼"

APPROVED:

DIVISION CHIEF, TRANSPORTATION ENGINEERING AND CONSTRUCTION

DIRECTOR, DEPARTMENT OF TRANSPORTATION

CITY OF BALTIMORE
DEPARTMENT OF TRANSPORTATION
TRANSPORTATION ENGINEERING AND CONSTRUCTION

ISSUED	REVISED	REVISED
8 / 2010		

42 INCH F SHAPE CONCRETE MEDIAN TRAFFIC BARRIER BIFURCATED 4'- 0" TO 8'-0"

STANDARD NO. BC 648.08

SCALE : NONE

SHEET 1 OF 1

NOTE: EPOXY COATING IS TO BE NOTED ON THE PLANS AND SHALL BE INCLUDED IN THE BID PRICE FOR THE ITEM "STANDARD CONCRETE BARRIER". STANDARD CONCRETE BARRIER TO BE FIELD CONSTRUCTED.

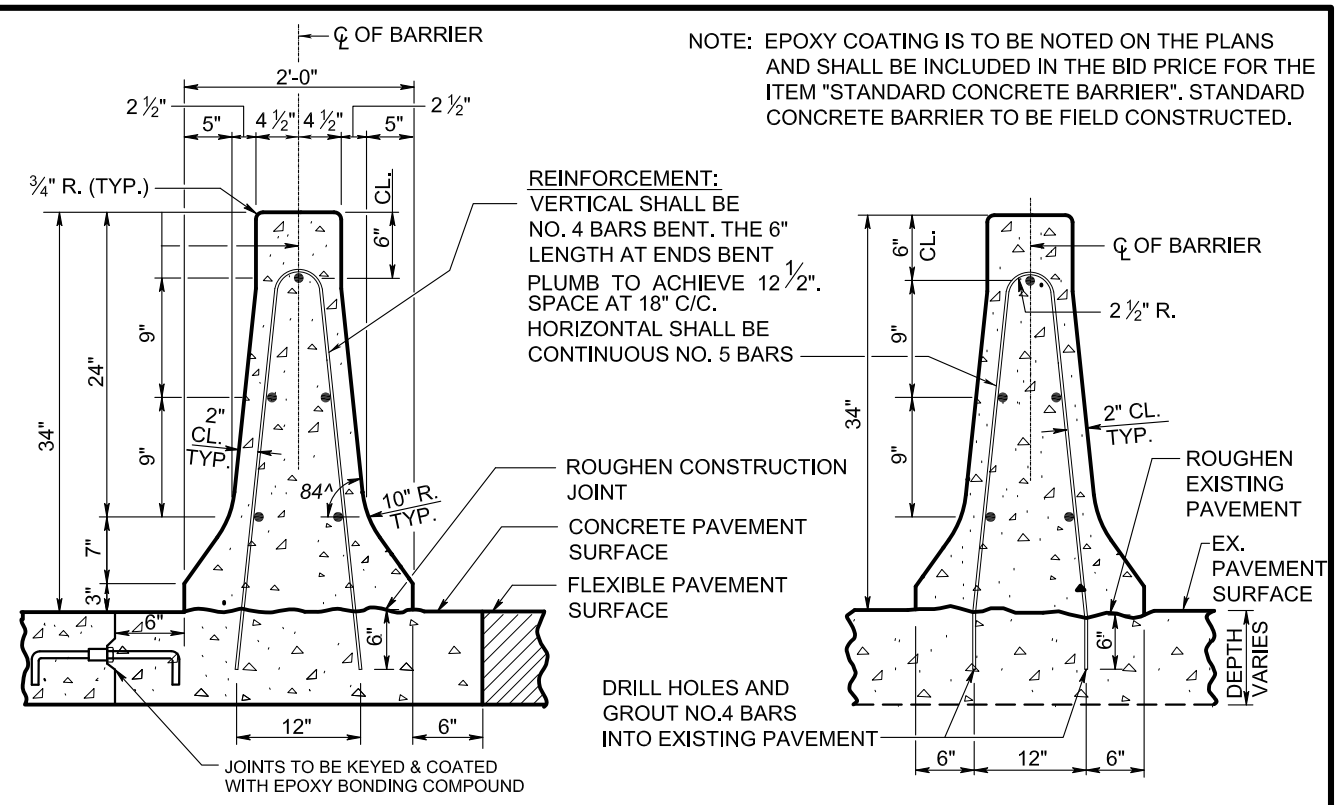

RIGID PAVING
(HALF SECTION)

FLEXIBLE PAVING
(HALF SECTION)

NEW CONSTRUCTION
(OR CONSTRUCTION ON EXISTING FLEXIBLE PAVEMENT)

EXISTING RIGID PAVEMENT
(BARRIER FOOTER IS REQUIRED FOR EXISTING FLEXIBLE PAVEMENT)

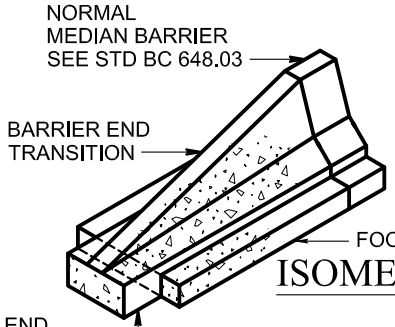

ISOMETRIC

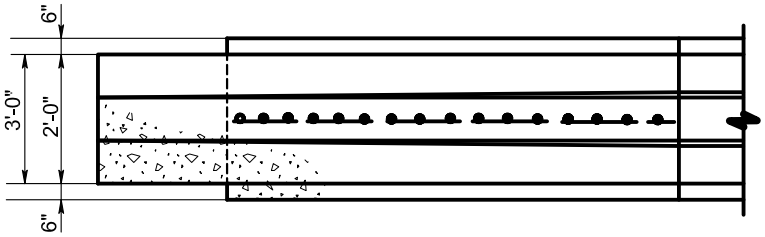

PLAN

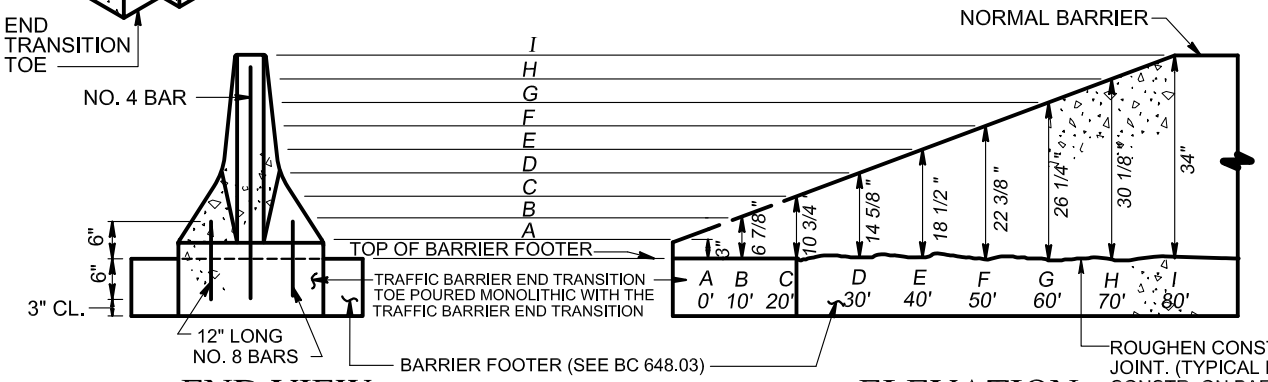

END VIEW

ELEVATION

TERMINUS TRANSITION

NOTE: SEE STD. NO. BC 648.03 FOR OTHER DETAILS AND NOTES

APPROVED:

DIVISION CHIEF, TRANSPORTATION ENGINEERING AND CONSTRUCTION

DIRECTOR, DEPARTMENT OF TRANSPORTATION

CITY OF BALTIMORE
DEPARTMENT OF TRANSPORTATION
TRANSPORTATION ENGINEERING AND CONSTRUCTION

ISSUED	REVISED	REVISED
8 / 2010		

34 INCH F SHAPE CONCRETE MEDIAN TRAFFIC BARRIER DOUBLE FACE

STANDARD NO. BC 648.21

SCALE : NONE

SHEET 1 OF 1

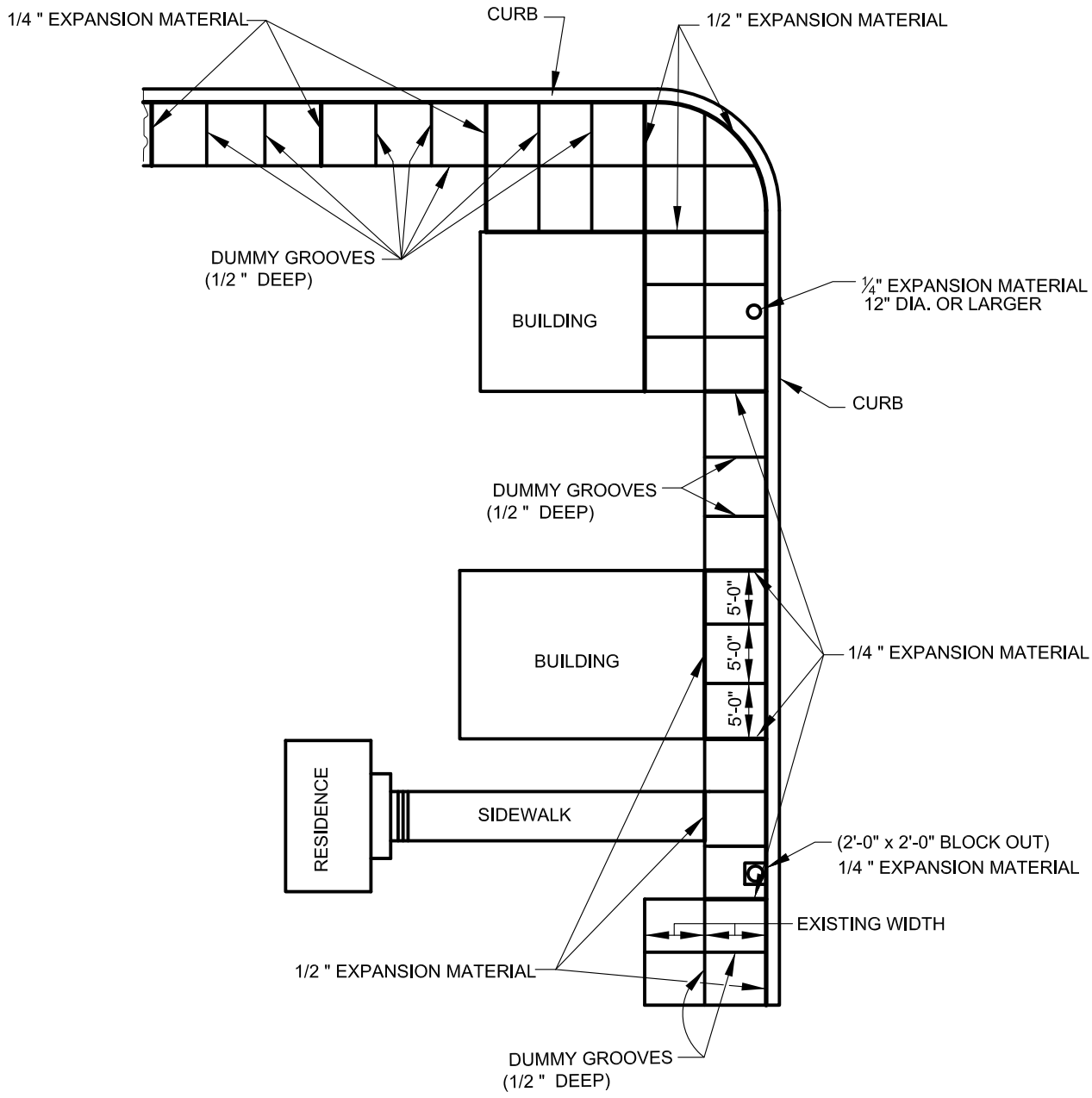

APPROVED:

DIVISION CHIEF, TRANSPORTATION ENGINEERING AND CONSTRUCTION

DIRECTOR, DEPARTMENT OF TRANSPORTATION

CITY OF BALTIMORE
DEPARTMENT OF TRANSPORTATION
TRANSPORTATION ENGINEERING AND CONSTRUCTION

SIDEWALK EXPANSION JOINTS

ISSUED	REVISED	REVISED
8 / 2010		

STANDARD NO.
BC 655.01

SCALE : NONE

SHEET 1 OF 1

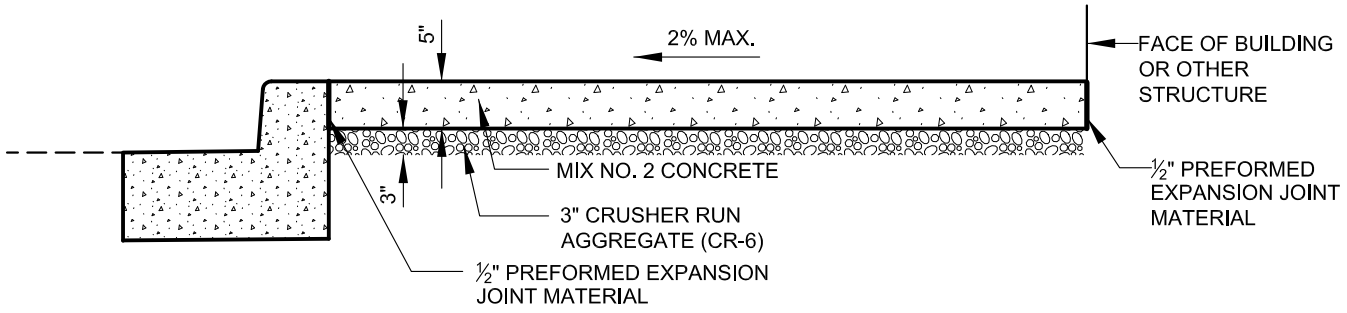

APPROVED :

DIVISION CHIEF, TRANSPORTATION ENGINEERING AND CONSTRUCTION

DIRECTOR, DEPARTMENT OF TRANSPORTATION

CITY OF BALTIMORE
DEPARTMENT OF TRANSPORTATION
TRANSPORTATION ENGINEERING AND CONSTRUCTION

TYPICAL SECTION CONCRETE SIDEWALK

ISSUED	REVISED	REVISED
8 / 2010		

STANDARD NO.
BC 655.05

SCALE : NONE

SHEET 1 OF 1

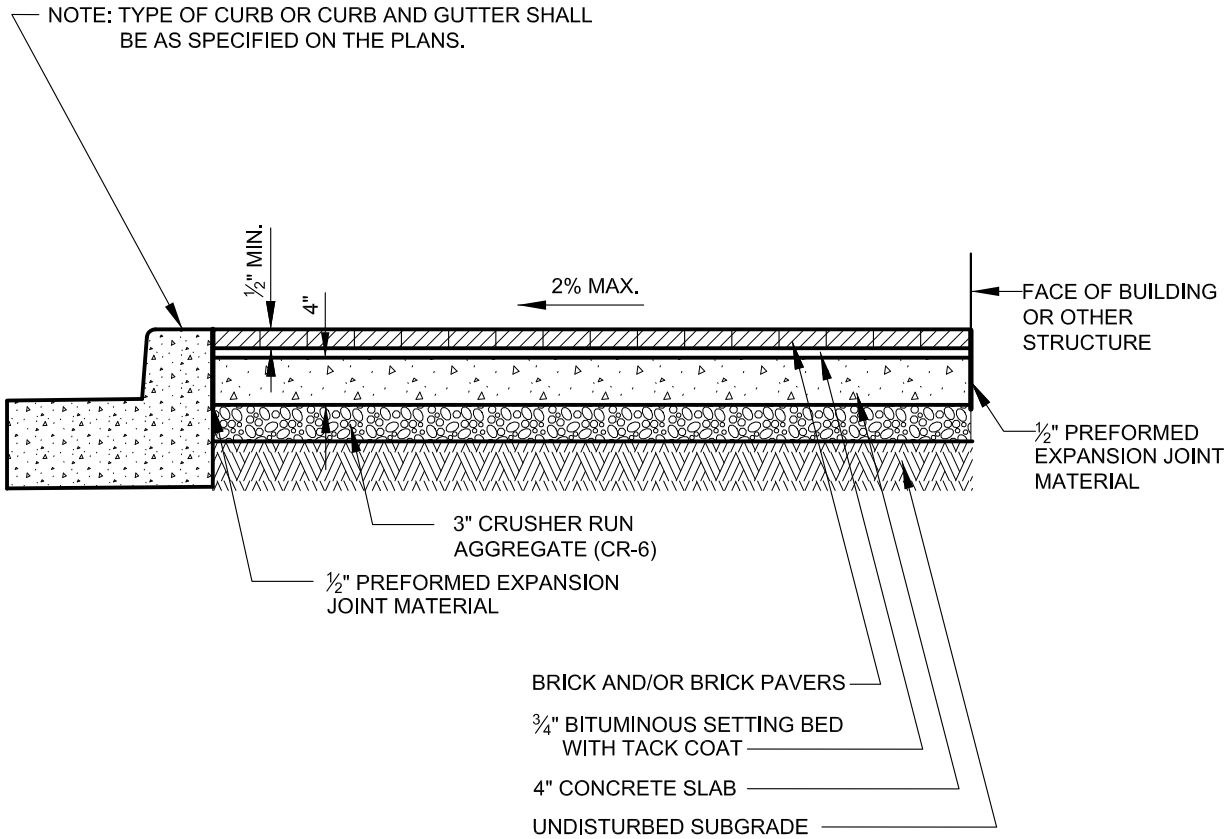

NOTE: BRICK WILL NOT BE INSTALLED FOR DRIVEWAYS.
ONLY STANDARD CONCRETE SHALL BE USED.

CITY OF BALTIMORE 1797	APPROVED: DIVISION CHIEF, TRANSPORTATION ENGINEERING AND CONSTRUCTION; DIRECTOR, DEPARTMENT OF TRANSPORTATION	CITY OF BALTIMORE DEPARTMENT OF TRANSPORTATION TRANSPORTATION ENGINEERING AND CONSTRUCTION	ISSUED	REVISED	REVISED
			8 / 2010		
		TYPICAL SECTION BRICK SIDEWALK	STANDARD NO. BC 655.10		
			SCALE : NONE	SHEET 1 OF 1	

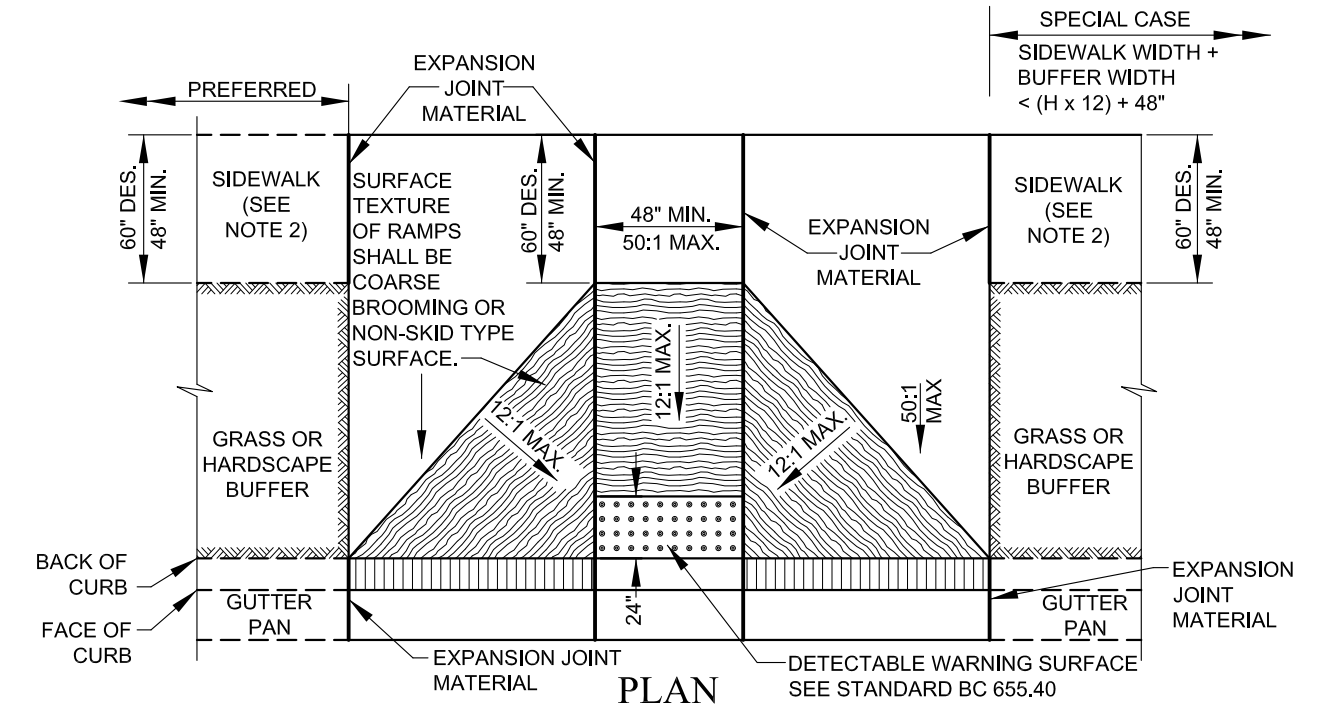

PLAN

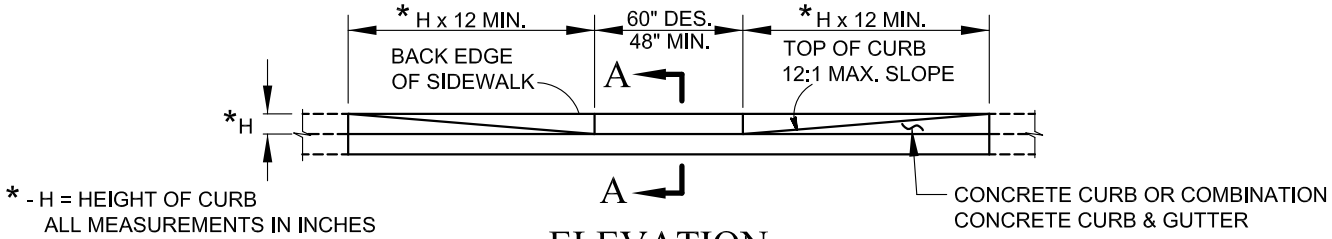

ELEVATION

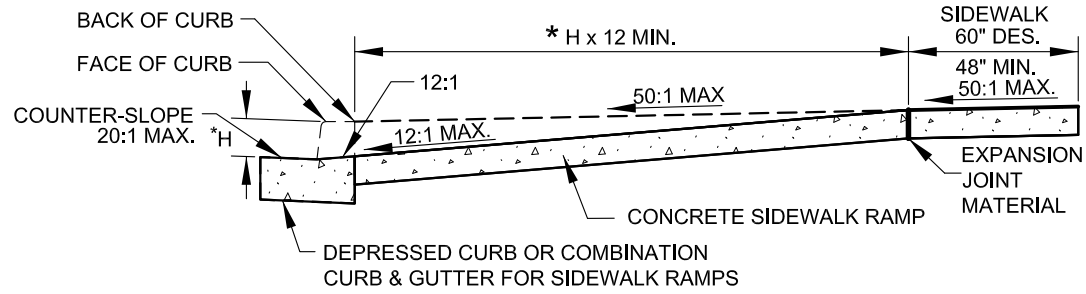

SECTION A-A

NOTES

1. TO BE USED WHERE SIDEWALK IS SEPARATED FROM ADJACENT CURB. THIS STANDARD MAY BE MODIFIED TO SUIT A PARTICULAR LOCATION.
2. WHERE 48" SIDEWALK CAN NOT BE PROVIDED, A DESIGN WAIVER MUST BE REQUESTED.
3. NO TRAVERSABLE SLOPE ON THE RAMP OR SIDEWALK SHALL EXCEED 12:1 IN THE DIRECTION OF PEDESTRIAN TRAVEL, OR 50:1 PERPENDICULAR TO THE DIRECTION OF PEDESTRIAN TRAVEL.
4. EXPANSION JOINT MATERIAL SHALL BE INSTALLED IN ACCORDANCE WITH STD. BC 655.01.
5. SIDEWALK RAMP SHALL BE INCLUDED IN PRICE BID FOR CONCRETE SIDEWALK. DEPRESSED CURB AND CURB TRANSITION FOR SIDEWALK RAMP SHALL BE INCLUDED IN PRICE BID FOR CURB OR CURB & GUTTER . DETECTABLE WARNING SURFACE SHALL BE PAID FOR ON A SQUARE FOOT BASIS.
6. SIDEWALK RAMPS TO BE SHOWN ON PLANS SYMBOLICALLY AND REFERENCED WITH THE CENTER OF THE RAMP ALIGNED TO A STATION ON THE CONSTRUCTION CENTERLINE. SEPARATE DETAILS SHALL BE SHOWN WHERE PROPOSED RAMP VARIES FROM STANDARD CASES.

APPROVED:

DIVISION CHIEF, TRANSPORTATION ENGINEERING AND CONSTRUCTION

DIRECTOR, DEPARTMENT OF TRANSPORTATION

CITY OF BALTIMORE
DEPARTMENT OF TRANSPORTATION
TRANSPORTATION ENGINEERING AND CONSTRUCTION

ISSUED	REVISED	REVISED
8 / 2010		

SIDEWALK RAMPS PERPENDICULAR

STANDARD NO. BC 655.11

SCALE : NONE

SHEET 1 OF 1

NOTE: USE ONE 5' SIDEWALK PANEL AS TRANSITION TO MEET EXISTING SIDEWALK

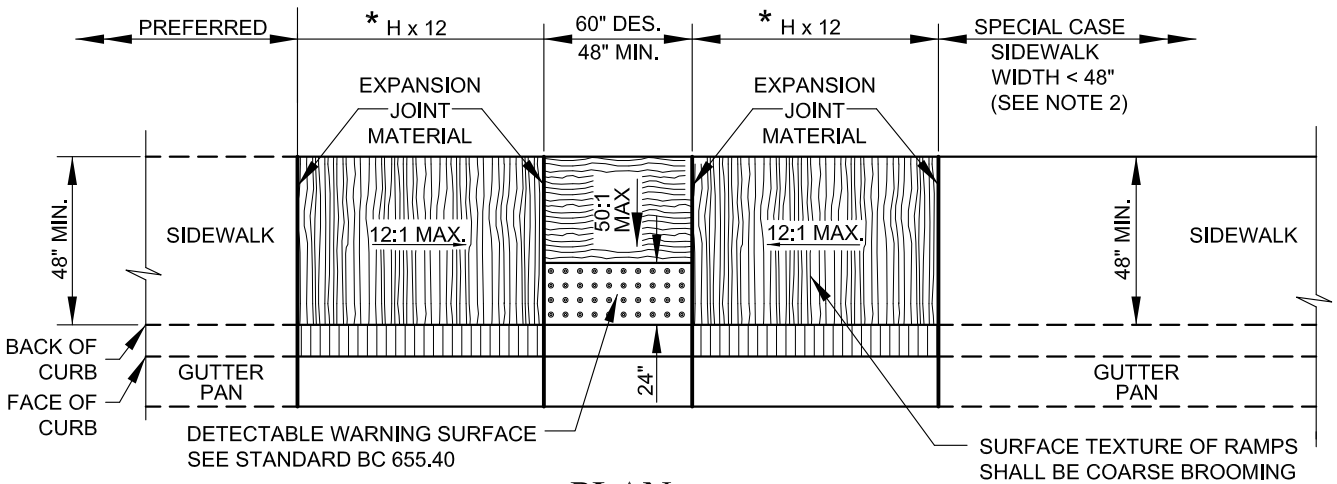

PLAN

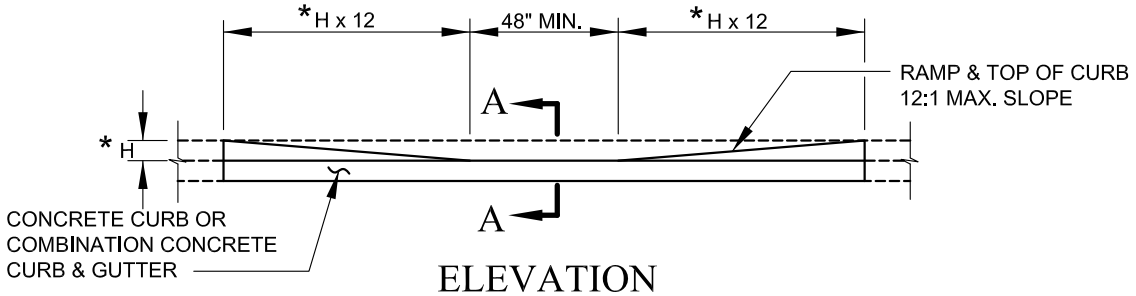

ELEVATION

* - H = HEIGHT OF CURB
ALL MEASUREMENTS IN INCHES

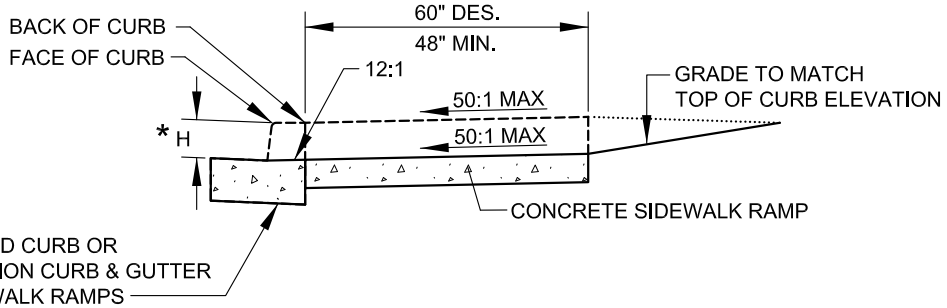

SECTION A-A

NOTES

1. TO BE USED WHERE SIDEWALK IS ADJACENT TO THE CURB. THIS STANDARD MAY BE MODIFIED TO SUIT A PARTICULAR LOCATION.
2. WHERE 48" SIDEWALK CAN NOT BE PROVIDED, A DESIGN WAIVER MUST BE REQUESTED.
3. NO TRAVERSABLE SLOPE ON THE RAMP OR SIDEWALK SHALL EXCEED 12:1 IN THE DIRECTION OF PEDESTRIAN TRAVEL, OR 50:1 PERPENDICULAR TO THE DIRECTION OF PEDESTRIAN TRAVEL.
4. EXPANSION JOINT MATERIAL SHALL BE INSTALLED IN ACCORDANCE WITH STD. BC 655.01.
5. SIDEWALK RAMP SHALL BE INCLUDED IN PRICE BID FOR CONCRETE SIDEWALK. DEPRESSED CURB AND CURB TRANSITION FOR SIDEWALK RAMP SHALL BE INCLUDED IN PRICE BID FOR CURB OR CURB & GUTTER . DETECTABLE WARNING SURFACE SHALL BE PAID FOR ON A SQUARE FOOT BASIS.
6. SIDEWALK RAMPS TO BE SHOWN ON PLANS SYMBOLICALLY AND REFERENCED WITH THE CENTER OF THE RAMP ALIGNED TO A STATION ON THE CONSTRUCTION CENTERLINE. SEPARATE DETAILS SHALL BE SHOWN WHERE PROPOSED RAMP VARIES FROM STANDARD CASES.

APPROVED :

DIVISION CHIEF, TRANSPORTATION ENGINEERING AND CONSTRUCTION

DIRECTOR, DEPARTMENT OF TRANSPORTATION

CITY OF BALTIMORE
DEPARTMENT OF TRANSPORTATION
TRANSPORTATION ENGINEERING AND CONSTRUCTION

ISSUED	REVISED	REVISED
8 / 2010		

SIDEWALK RAMPS PARALLEL

STANDARD NO. BC 655.12

SCALE : NONE

SHEET 1 OF 1

NOTE: USE ONE 5' SIDEWALK PANEL AS TRANSITION
IF NEEDED TO MEET EXISTING SIDEWALK
(15' MAX. REBUILD)

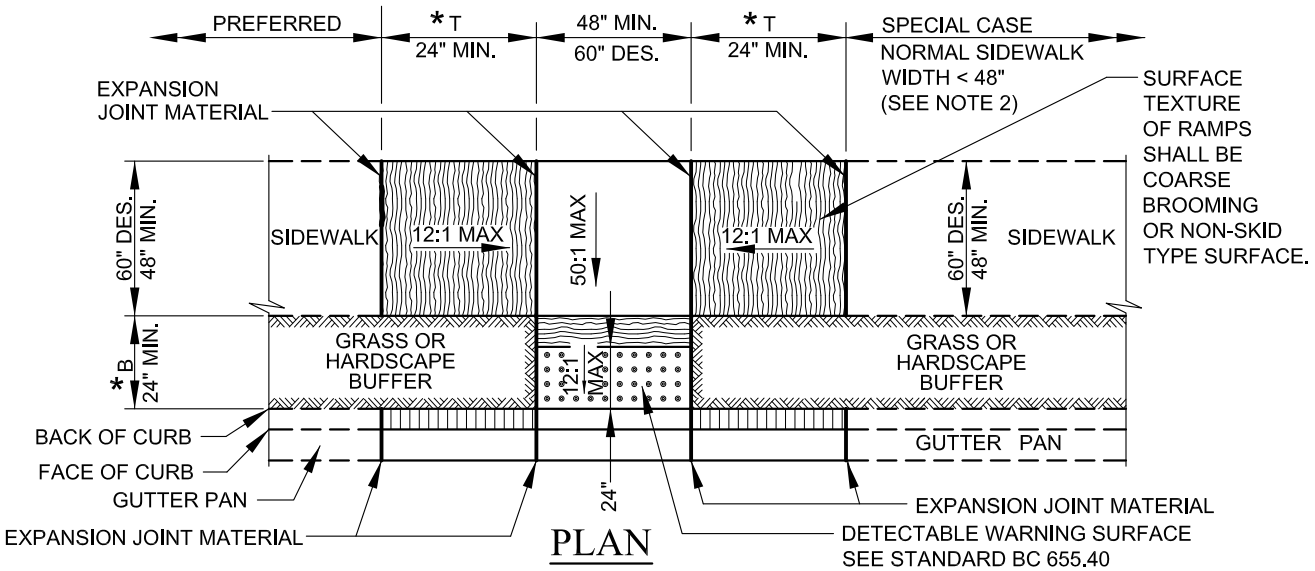

PLAN

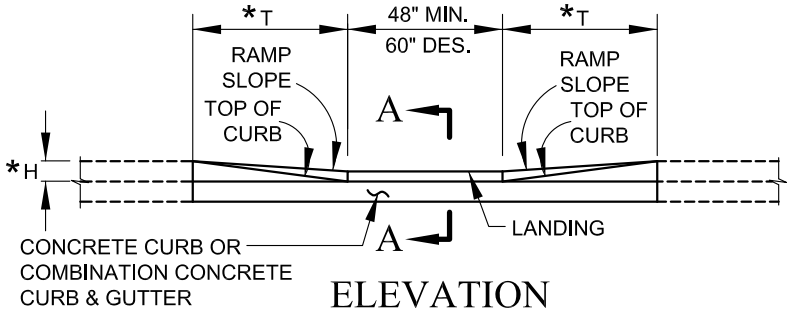

ELEVATION

* H = HEIGHT OF CURB
B = BUFFER WIDTH (BACK OF CURB TO FRONT OF SIDEWALK)
T = TRANSITION LENGTH (LENGTH OF RAMP FROM SIDEWALK TO LANDING)
T = (12 x H) - B
ALL MEASUREMENTS IN INCHES

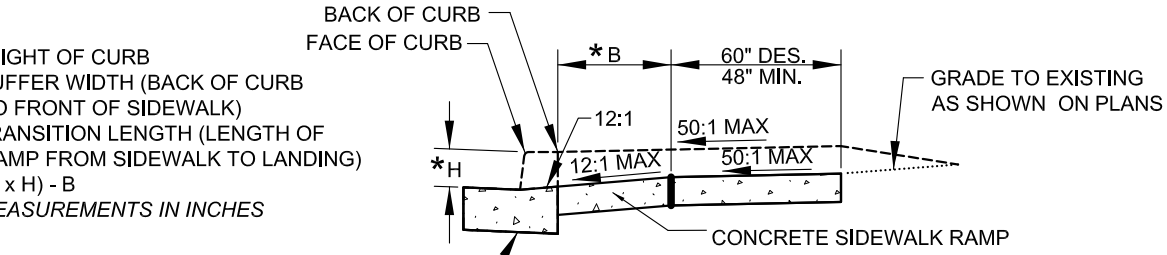

SECTION A-A

NOTES

1. TO BE USED WHERE AT LEAST 6'-0" EXISTS BETWEEN THE BACK OF CURB AND THE BACK OF SIDEWALK. THIS STANDARD MAY BE MODIFIED TO SUIT A PARTICULAR LOCATION.
2. WHERE 48" SIDEWALK CAN NOT BE PROVIDED, A DESIGN WAIVER MUST BE REQUESTED.
3. NO TRAVERSABLE SLOPE ON THE RAMP OR SIDEWALK SHALL EXCEED 12:1 IN THE DIRECTION OF PEDESTRIAN TRAVEL, OR 50:1 PERPENDICULAR TO THE DIRECTION OF PEDESTRIAN TRAVEL.
4. EXPANSION JOINT MATERIAL SHALL BE INSTALLED IN ACCORDANCE WITH STD. BC 655.01.
5. SIDEWALK RAMP SHALL BE INCLUDED IN PRICE BID FOR CONCRETE SIDEWALK. DEPRESSED CURB AND CURB TRANSITION SHALL BE INCLUDED IN PRICE BID FOR CURB OR CURB & GUTTER. DETECTABLE WARNING SURFACE SHALL BE PAID FOR ON A SQUARE FOOT BASIS.
6. SIDEWALK RAMPS TO BE SHOWN ON PLANS SYMBOLICALLY AND REFERENCED WITH THE CENTER OF THE RAMP ALIGNED TO A STATION ON THE CONSTRUCTION CENTERLINE. SEPARATE DETAILS SHALL BE SHOWN WHERE PROPOSED RAMP VARIES FROM STANDARD CASES.

APPROVED:
DIVISION CHIEF, TRANSPORTATION ENGINEERING AND CONSTRUCTION
DIRECTOR, DEPARTMENT OF TRANSPORTATION

CITY OF BALTIMORE
DEPARTMENT OF TRANSPORTATION
TRANSPORTATION ENGINEERING AND CONSTRUCTION

ISSUED	REVISED	REVISED
8 / 2010		

SIDEWALK RAMPS COMBINATION

STANDARD NO.
BC 655.13

SCALE : NONE | SHEET 1 OF 1

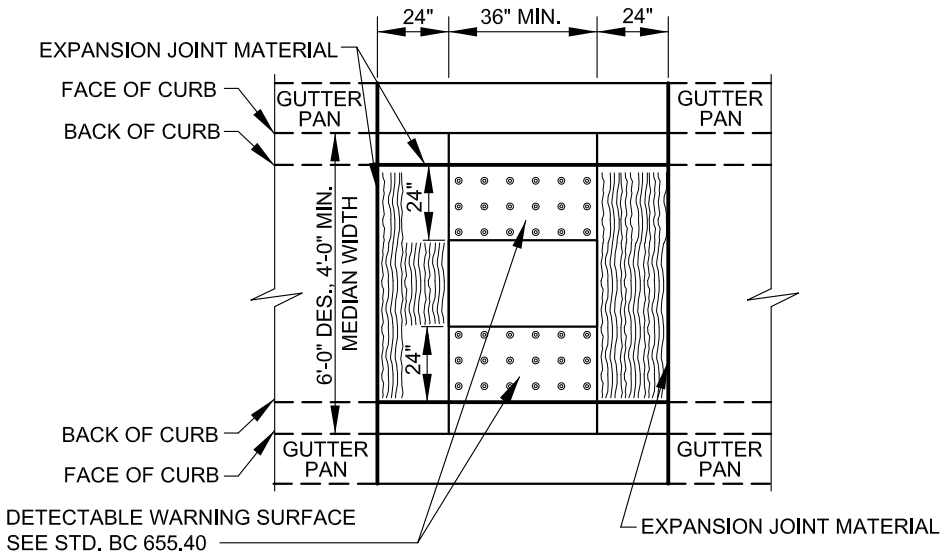

PLAN

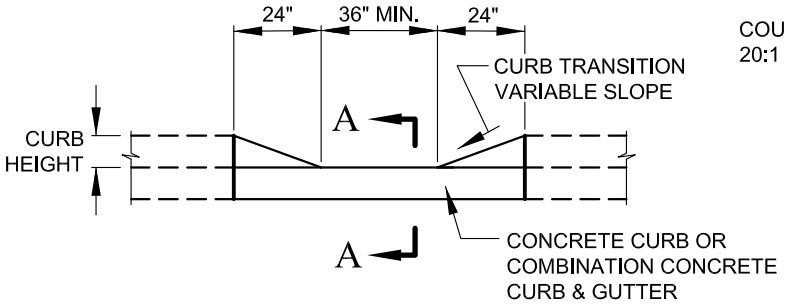

ELEVATION

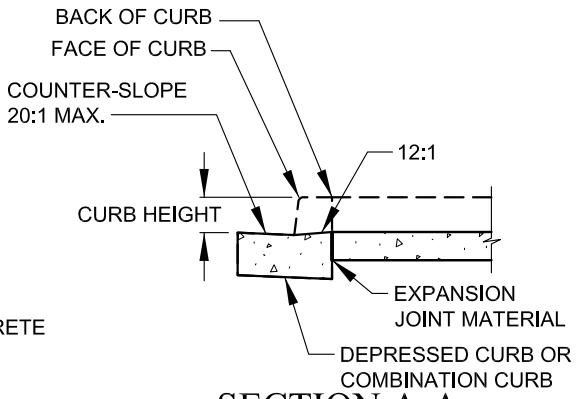

SECTION A-A

NOTES

1. TO BE USED WHERE A STREET-LEVEL PEDESTRIAN CROSSING IS REQUIRED THROUGH RAISED MEDIANS OR RAISED ISLANDS AND THERE IS INSUFFICIENT WIDTH TO PROVIDE A RAMPED MEDIAN OR ISLAND OPENING (STD. BC 655.22).
2. WHERE PHYSICAL CONSTRAINTS PRECLUDE USE OF 6 FT. MEDIAN, A 4 FT. MEDIAN WIDTH IS ACCEPTABLE.
3. EXPANSION JOINT MATERIAL SHALL BE INSTALLED IN ACCORDANCE WITH STANDARD BC 655.01.
4. CUT-THROUGH MEDIAN AND ISLAND OPENINGS SHALL BE INCLUDED IN PRICE BID FOR MONOLITHIC CONCRETE MEDIAN. DETECTABLE WARNING SURFACE SHALL BE PAID FOR ON A SQUARE FOOT BASIS.
5. CUT-THROUGH MEDIAN AND ISLAND OPENINGS TO BE SHOWN ON PLANS SYMBOLICALLY AND REFERENCED WITH THE CENTER OF THE OPENING ALIGNED TO A STATION ON THE CONSTRUCTION CENTERLINE. SEPARATE DETAILS SHALL BE SHOWN WHERE PROPOSED OPENING VARIES FROM STANDARD METHODS.

APPROVED:

DIVISION CHIEF, TRANSPORTATION ENGINEERING AND CONSTRUCTION

DIRECTOR, DEPARTMENT OF TRANSPORTATION

CITY OF BALTIMORE
DEPARTMENT OF TRANSPORTATION
TRANSPORTATION ENGINEERING AND CONSTRUCTION

CUT-THROUGH MEDIAN AND ISLAND OPENINGS

ISSUED	REVISED	REVISED
8 / 2010		

STANDARD NO.
BC 655.21

SCALE : NONE

SHEET 1 OF 1

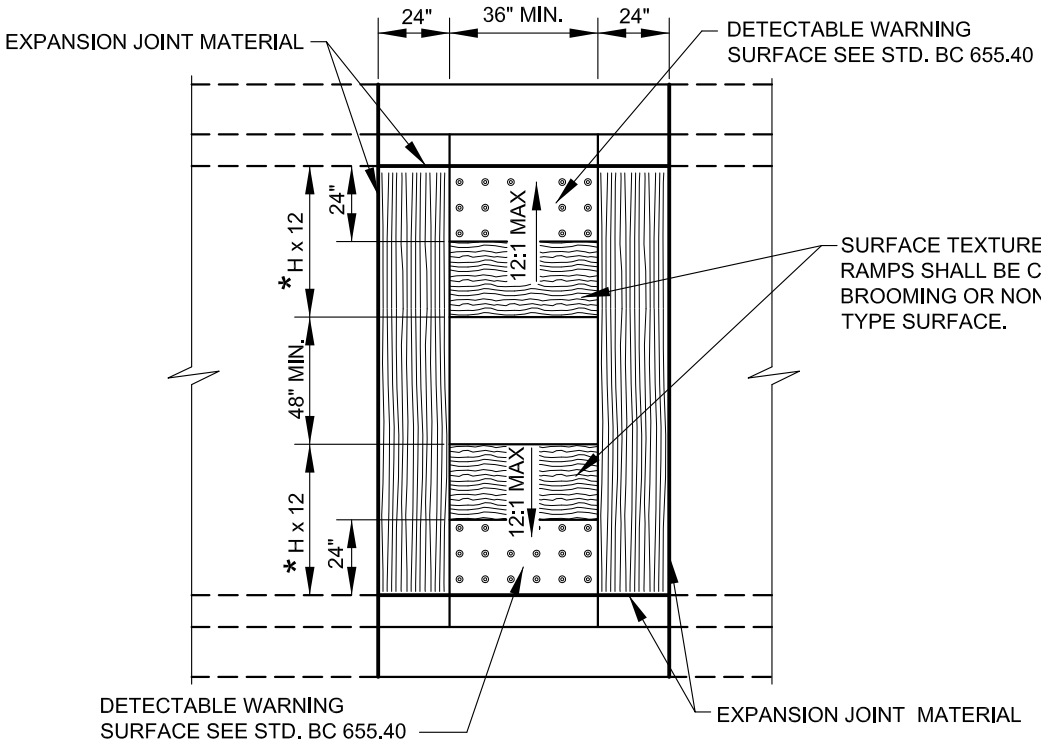

PLAN

* H = HEIGHT OF CURB
ALL MEASUREMENTS IN INCHES

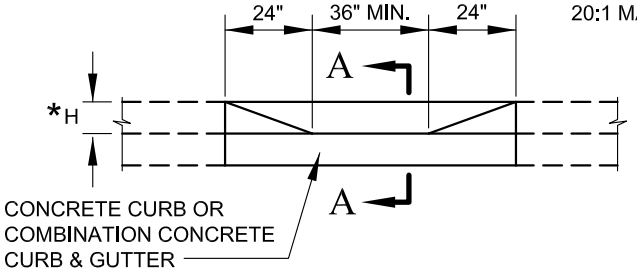

ELEVATION

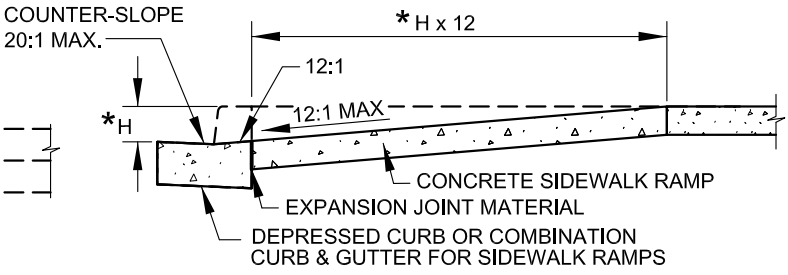

SECTION A-A

NOTES

1. TO BE USED WHERE A PEDESTRIAN ACCESS ROUTE CROSSES RAISED MEDIANS OR RAISED ISLANDS AND THERE IS SUFFICIENT WIDTH TO SATISFY THE GEOMETRY OUTLINED IN THIS STANDARD.
2. EXPANSION JOINT MATERIAL SHALL BE INSTALLED IN ACCORDANCE WITH STANDARD BC 655.01.
3. RAMPED MEDIAN AND ISLAND OPENINGS SHALL BE MEASURED AND PAID AT THE CONTRACT UNIT PRICE PER SQUARE FOOT FOR CONCRETE SIDEWALK. DETECTABLE WARNING SURFACE SHALL BE PAID FOR ON A SQUARE FOOT BASIS.
4. RAMPED MEDIAN AND ISLAND OPENINGS TO BE SHOWN ON PLANS SYMBOLICALLY AND REFERENCED WITH THE CENTER OF THE OPENING ALIGNED TO A STATION ON THE CONSTRUCTION CENTERLINE. SEPARATE DETAILS SHALL BE SHOWN WHERE PROPOSED OPENING VARIES FROM STANDARD METHODS.

CITY OF BALTIMORE 1797	APPROVED: DIVISION CHIEF, TRANSPORTATION ENGINEERING AND CONSTRUCTION; DIRECTOR, DEPARTMENT OF TRANSPORTATION	CITY OF BALTIMORE DEPARTMENT OF TRANSPORTATION TRANSPORTATION ENGINEERING AND CONSTRUCTION	ISSUED	REVISED	REVISED
			8 / 2010		
		RAMPED MEDIAN AND ISLAND OPENINGS	STANDARD NO. BC 655.22		
			SCALE : NONE	SHEET 1 OF 1	

DETAILS FOR DETECTABLE WARNING SURFACE

SEE PLACEMENT GUIDELINES BELOW

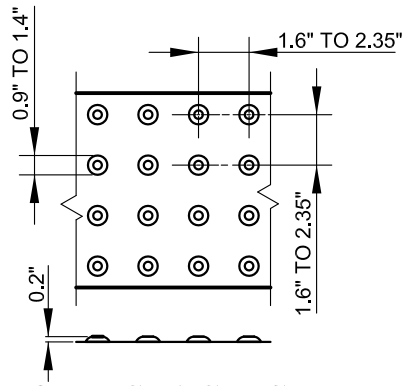

DOME SPACING

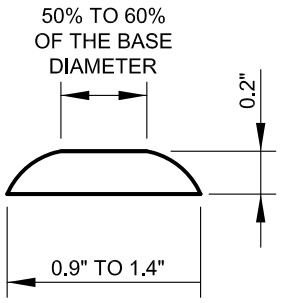

DOME SECTION

PLACEMENT GUIDELINES

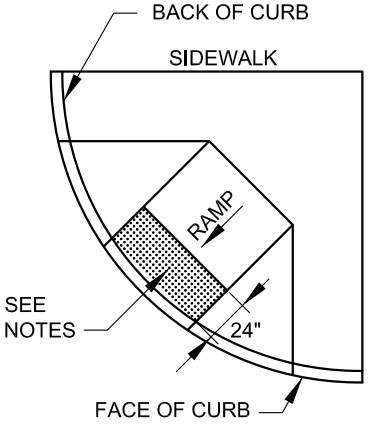

SHARED CURB RAMP

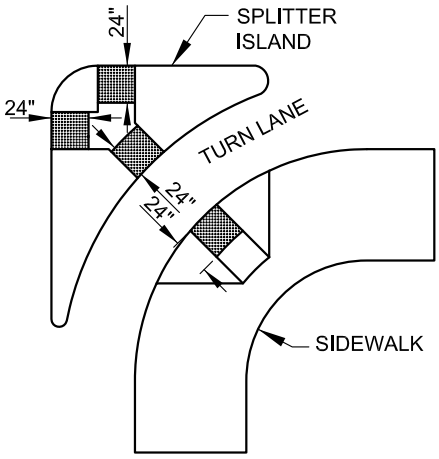

REFUGE ISLAND

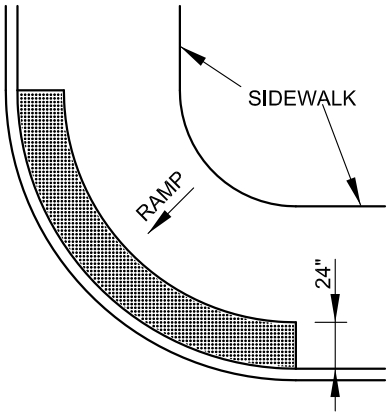

BLENDED CURB

WHERE ISLANDS OR MEDIANS ARE LESS THAN 6 FEET WIDE, THE DETECTABLE WARNING SURFACE SHOULD EXTEND ACROSS THE FULL LENGTH OF THE CUT THROUGH THE ISLAND OR MEDIAN

NOTES

1. THE DETECTABLE WARNING SURFACE SHALL BE LOCATED SO THAT THE EDGE NEAREST THE CURB LINE IS 6 TO 8 INCHES FROM THE FACE OF CURB.
2. FOR SKEWED APPLICATIONS DETECTABLE WARNING SURFACE SHALL BE PLACED SO THAT THE DOMES CLOSEST TO THE BACK OF CURB ARE NO LESS THAN 0.5" AND NO MORE THAN 3.0" FROM THE BACK OF CURB. TRUNCATED DOME SURFACES SHALL BE FABRICATED TO PROVIDE FULL DOMES ONLY.
3. DETECTABLE WARNING SURFACE SHALL BE PAID FOR ON A SQUARE FOOT BASIS.
4. DETECTABLE WARNING SURFACES ARE REQUIRED AT STREET CROSSING ALLEY & SIGNALIZED INTERSECTIONS.

APPROVED:

DIVISION CHIEF, TRANSPORTATION ENGINEERING AND CONSTRUCTION

DIRECTOR, DEPARTMENT OF TRANSPORTATION

CITY OF BALTIMORE
DEPARTMENT OF TRANSPORTATION
TRANSPORTATION ENGINEERING AND CONSTRUCTION

DETECTABLE WARNING SURFACES

ISSUED	REVISED	REVISED
8 / 2010		

STANDARD NO.
BC 655.40

SCALE : NONE

SHEET 1 OF 1

APPROVED:

DIVISION CHIEF, TRANSPORTATION ENGINEERING AND CONSTRUCTION

DIRECTOR, DEPARTMENT OF TRANSPORTATION

CITY OF BALTIMORE
DEPARTMENT OF TRANSPORTATION
TRANSPORTATION ENGINEERING AND CONSTRUCTION

CONCRETE STAIRSTEPS AND ORNAMENTAL IRON RAILINGS

ISSUED	REVISED	REVISED
8 / 2010		

STANDARD NO.
BC 656.01

SCALE : NONE

SHEET 1 OF 1

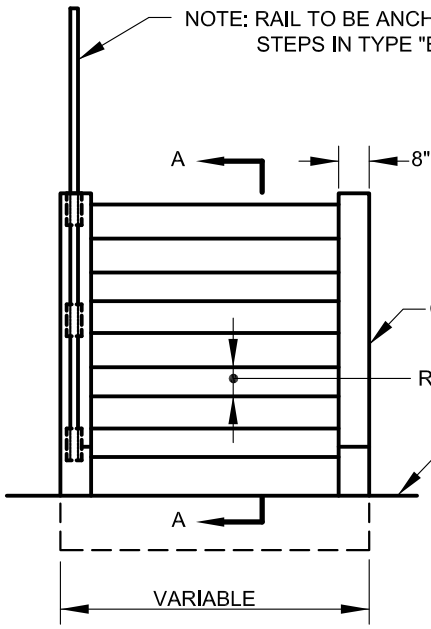

FRONT VIEW

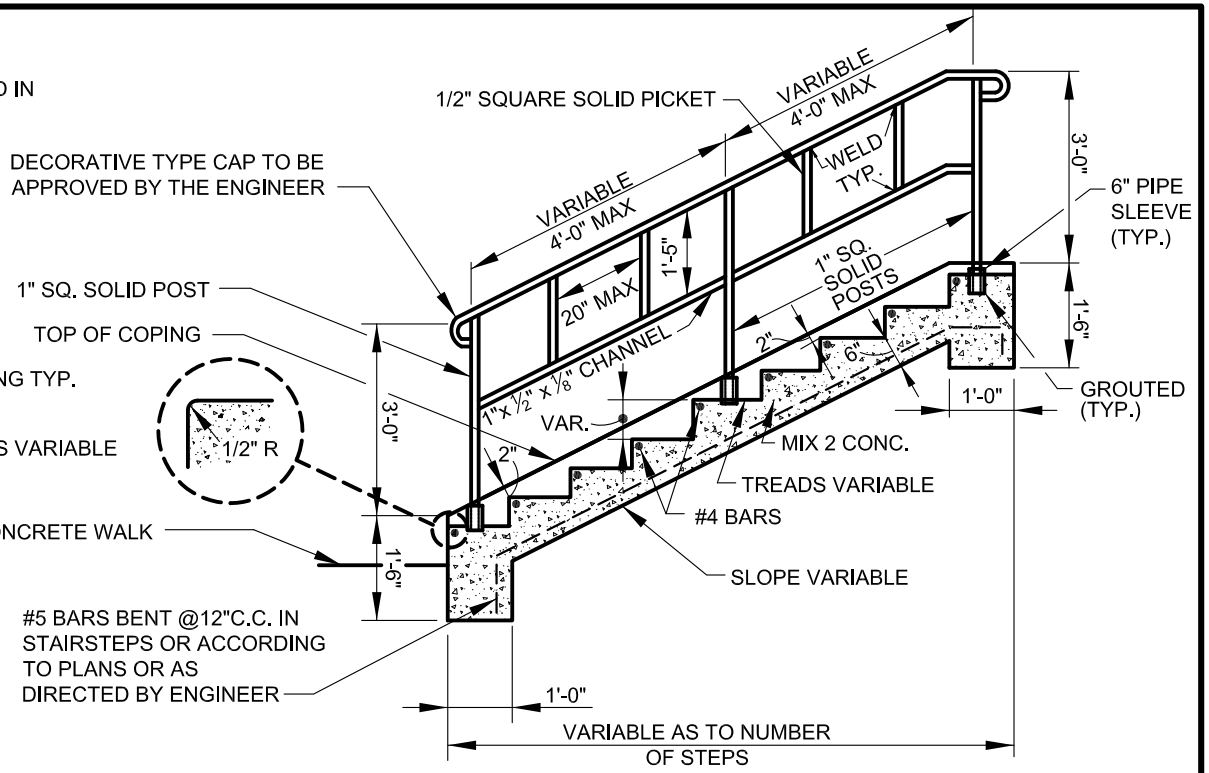

SECTION A-A

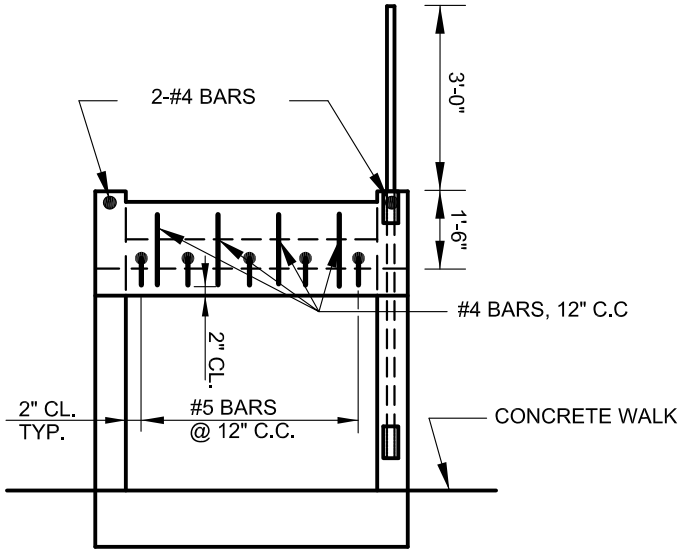

BACK VIEW

NOTES

1. STEEL SHALL CONFORM TO ASTM DESIGNATION A-36 OR 1020 MERCHANT GRADE.
2. CONCRETE STAIRSTEPS, TYPE "A", SHALL BE CONSTRUCTED WITH COPING (AS SHOWN ABOVE).
3. CONCRETE STAIRSTEPS, TYPE "B", SHALL BE CONSTRUCTED WITHOUT COPING.
4. THE ORNAMENTAL IRON RAILING SHALL BE INSTALLED ON STEPS WHERE THE VERTICAL RISE REACHES OR EXCEEDS FORTY-TWO (42) INCHES, AND AT OTHER LOCATIONS AS DIRECTED BY THE ENGINEER.
5. ALL RAILING SHALL HAVE ONE (1) PRIME COAT AND ONE (1) FINISH COAT OF BLACK EQUIPMENT ENAMEL PAINT OR APPROVED EQUAL. RAILING MEMBERS TO BE WELDED ACCORDING TO PLANS OR MANUFACTURER SPEC.

SLOPE	RISER	TREAD
1-1/2:1	7"	10-1/2"
2:1	6"	12"
4:1	4"	16"

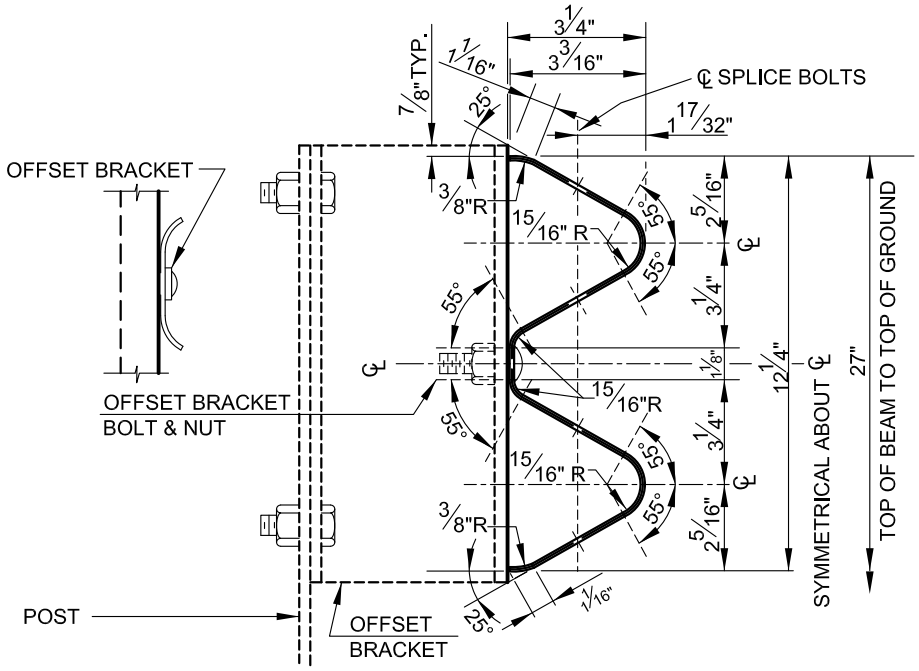

SECTION THRU RAIL ELEMENT

(MATERIAL: 12 GA. STEEL)

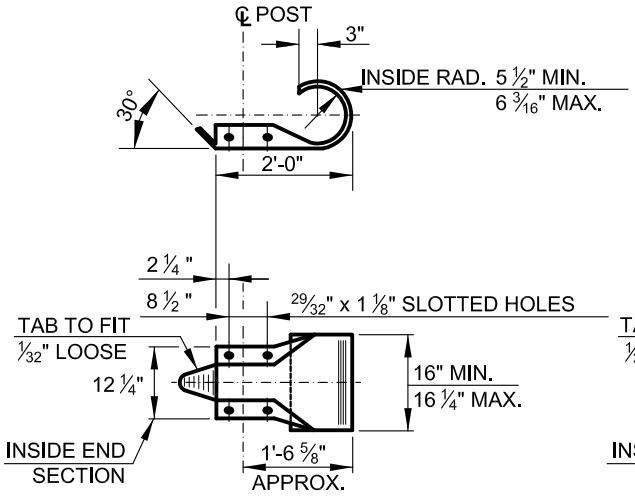

TRAFFIC BARRIER - END SECTION

(MATERIAL: 10 GA. STEEL)

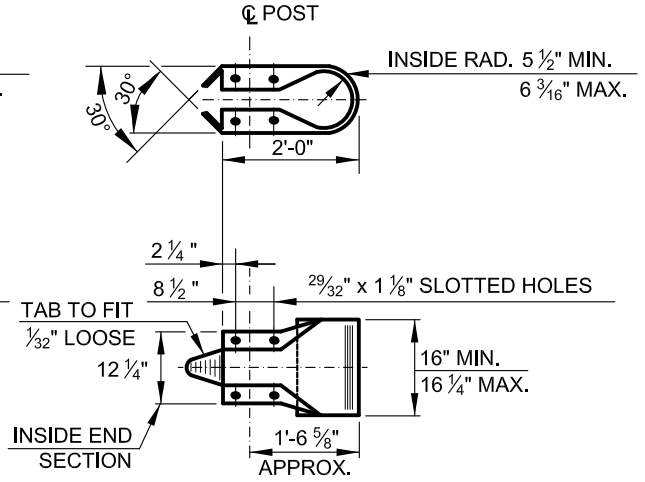

TRAFFIC BARRIER - END SECTION

(FOR BARRIER ON BOTH SIDES OF SAME POST)
(MATERIAL: 10 GA. STEEL)

GENERAL NOTES:

1. ALL DIMENSIONS ARE SUBJECT TO MFG. TOLERANCES.
2. RAIL ELEMENTS ARE FINISHED SHOP CURVED, CONCAVE OR CONVEX TO RADII BETWEEN 20 FT. & 150 FT.
3. THE STEEL FOR RAIL ELEMENTS AND BOLTS IS OF A QUALITY TO DEVELOP SPECIFICATION VALUES FOR BEAM AND TENSILE STRENGTHS.
4. FOR MATERIALS, MATERIAL PROCESSING AND ASSEMBLY, SEE LATEST DEPARTMENT OF GENERAL SERVICES SPECIFICATIONS.
5. FOR OFFSET BRACKET DETAIL, SEE BC 660.03
6. POSTS TO BE W6x8.5, 5'-9" LONG, SPACED AT 6'-3" C/C. EXCEPT AT STRUCTURES OR REINFORCED SECTIONS.
7. BACK-UP PLATE (12" LENGTH OF BEAM) CENTERED ON OFFSET BRACKET. BOLT TO BE PLACED WHERE NO OVERLAP OF RAIL SPLICE OCCURS.
8. AT BRIDGE APPROACH USE 6 POSTS SPACED AT 2'-0" C/C & NEXT 4 POSTS AT 3'-1 ½" C/C.
9. AT FIXED OBJECT USE REINFORCED RAIL SECTION.

APPROVED:

Frank Murphy

DEPUTY DIRECTOR - OPERATIONS

Khalil Zaied

DIRECTOR, DEPARTMENT OF TRANSPORTATION

CITY OF BALTIMORE
DEPARTMENT OF TRANSPORTATION
TRAFFIC DIVISION

ISSUED	REVISED	REVISED
8 / 2010		

TRAFFIC BARRIER W BEAM
GENERAL NOTES & DETAILS

STANDARD NO.
BC 660.01

SCALE : NONE | SHEET 1 OF 1

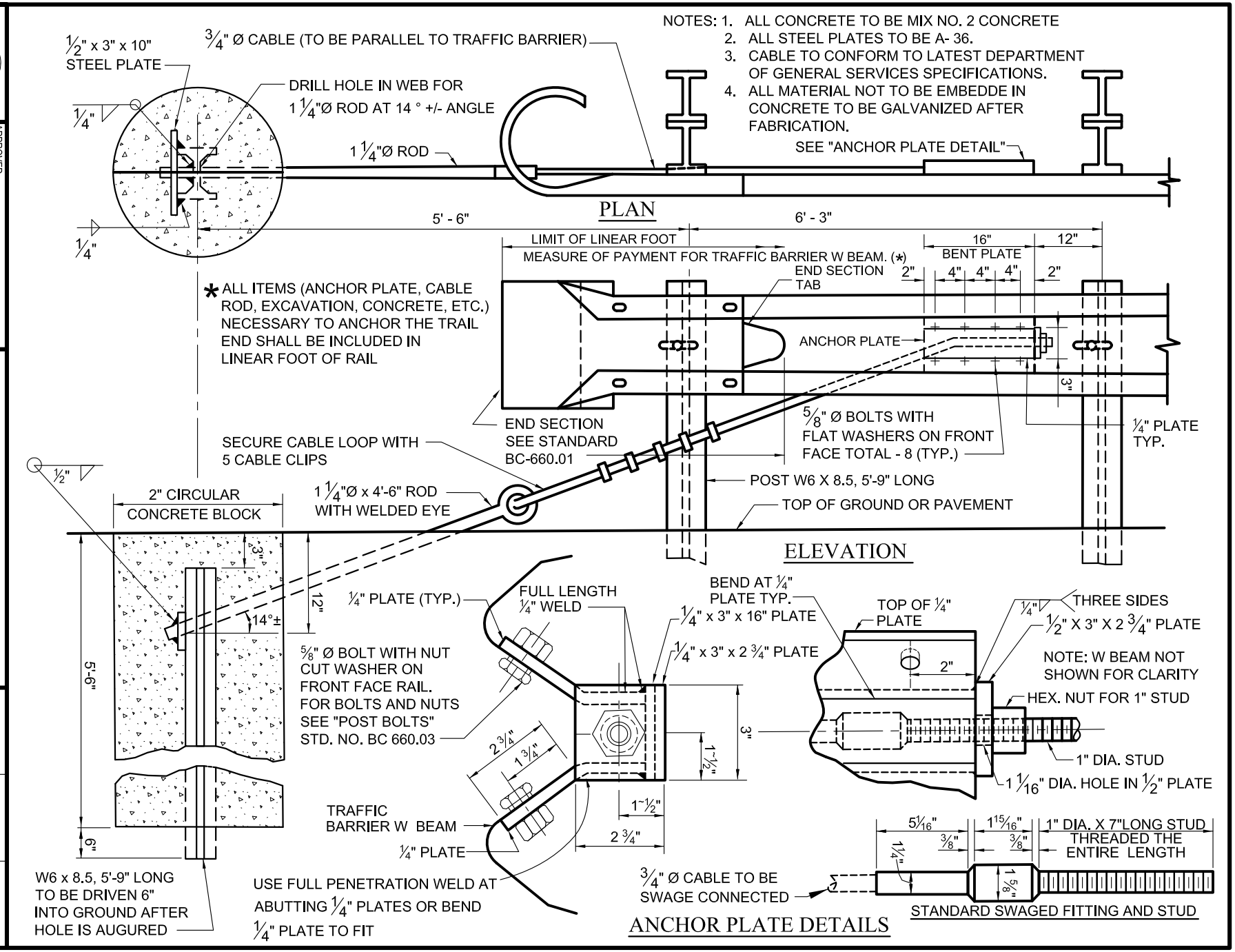

APPROVED:

DEPUTY DIRECTOR - OPERATIONS

DIRECTOR, DEPARTMENT OF TRANSPORTATION

CITY OF BALTIMORE
DEPARTMENT OF TRANSPORTATION
TRAFFIC DIVISION

TRAFFIC BARRIER W BEAM TRAIL END ANCHORAGE GENERAL NOTES & DETAILS

STANDARD NO. BC 660.02

ISSUED	REVISED	REVISED
8 / 2010		

SCALE : NONE

SHEET 1 OF 1

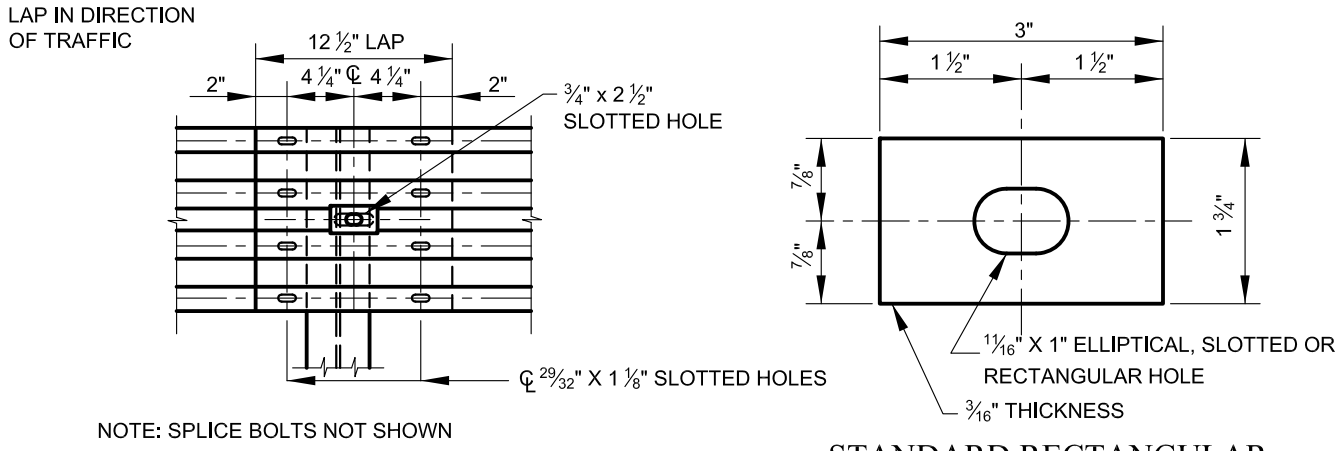

NOTE: SPLICE BOLTS NOT SHOWN

TRAFFIC BARRIER RAIL SPLICE

STANDARD RECTANGULAR GALVANIZED WASHER

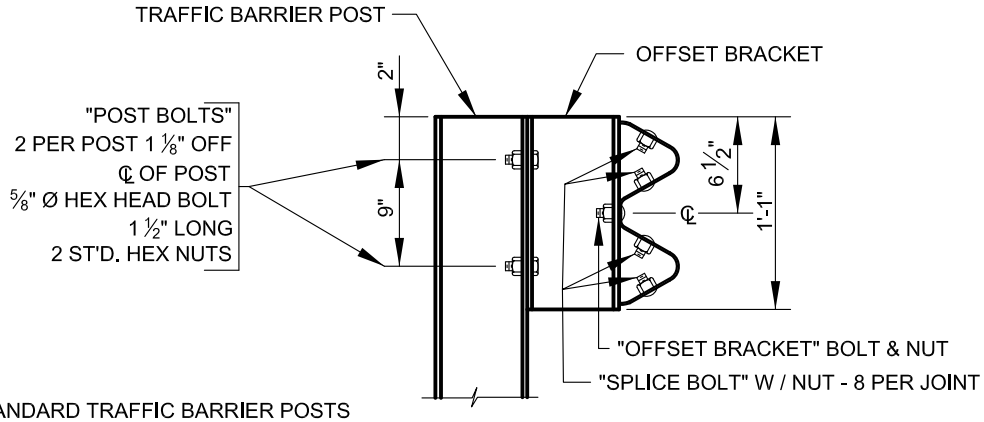

FOR STANDARD TRAFFIC BARRIER POSTS SEE STD. NO. BC 660.01

OFFSET BRACKET

W 6 x 8.5

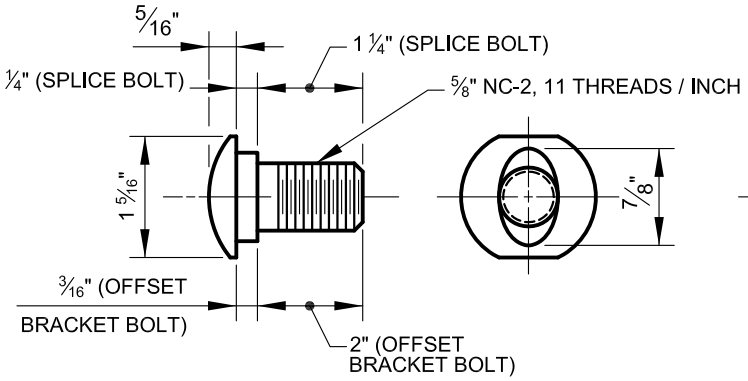

"SPLICE BOLT" & "OFFSET BRACKET BOLT"

8 PER JOINT
1 ¼" LONG

1 PER BRACKET
2" LONG

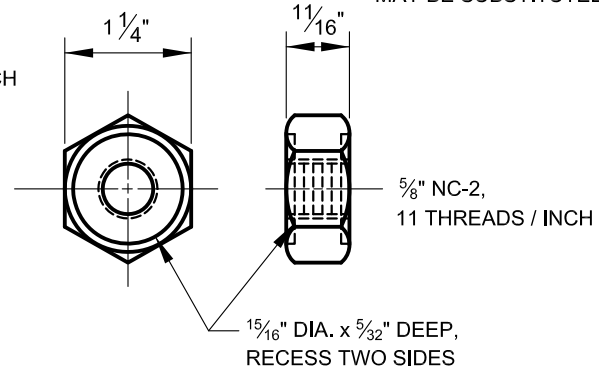

NUT

9 PER SPLICE

APPROVED:

Frank Murphy
DEPUTY DIRECTOR - OPERATIONS

Khalil Zaied
DIRECTOR, DEPARTMENT OF TRANSPORTATION

CITY OF BALTIMORE
DEPARTMENT OF TRANSPORTATION
TRAFFIC DIVISION

ISSUED	REVISED	REVISED
8 / 2010		

TRAFFIC BARRIER W BEAM SPLICE JOINT

STANDARD NO.
BC 660.03

SCALE : NONE | SHEET 1 OF 1

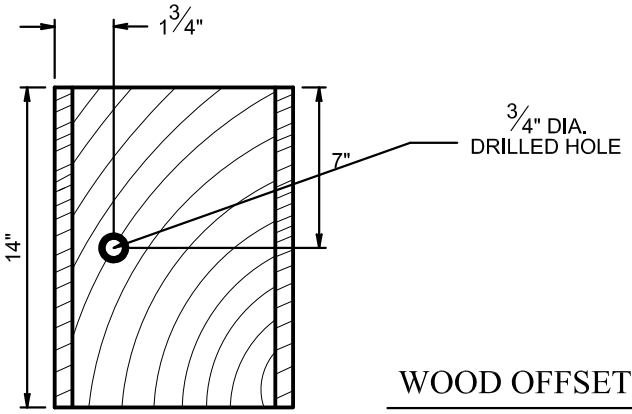

FRONT VIEW

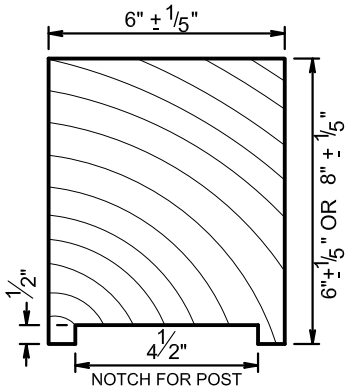

TOP VIEW

WOOD OFFSET BLOCK

USING NORMAL W BEAM PANELS

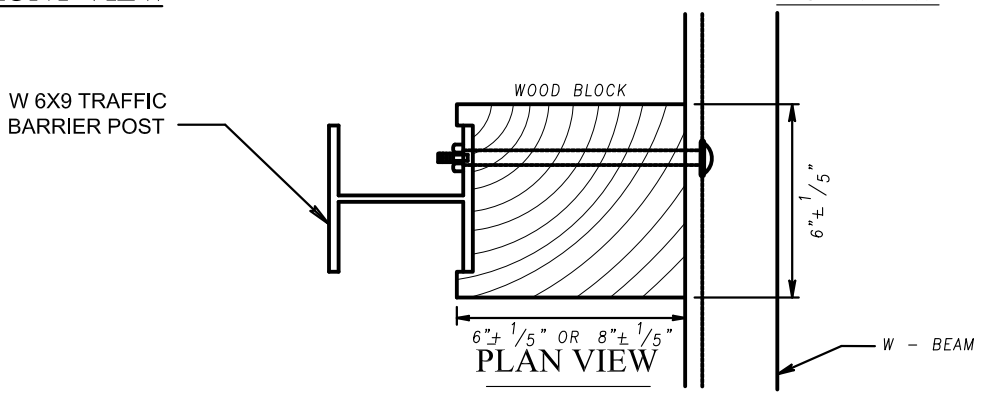

PLAN VIEW

TRAFFIC BARRIER POST AND OFFSET BLOCK

USING NORMAL W BEAM PANELS

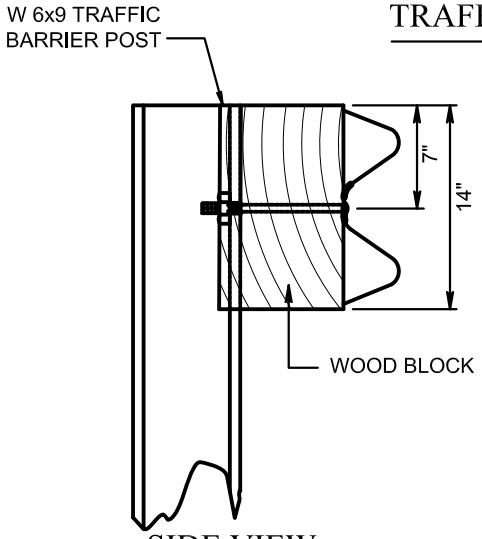

SIDE VIEW

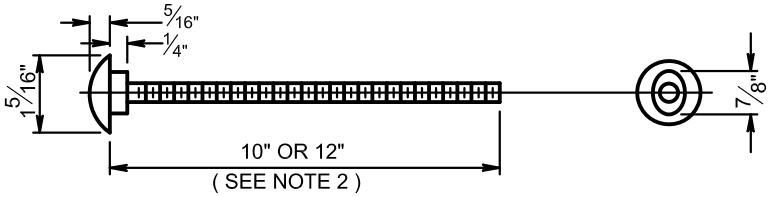

OFFSET BLOCK BOLT

5/8" NC2, 11 THREADS/INCH

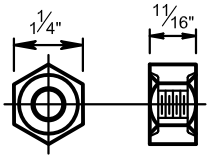

ALTERNATE-SINGLE RECESS NUTS
MAY BE SUBSTITUTED

5/8" NC2, 11 THREADS/INCH

15/16" DIA. x 3/32" DEEP RECESS TWO SIDES

NUT

NOTES

1. WOOD OFFSET BLOCKS 8 x 6x 14 INCHES TO BE USED ON ALL NEW CONSTRUCTION AND WHEN THE EXISTING TRAFFIC BARRIER WITH METAL OFFSET BLOCKS IS TO BE REMOVED AND RESET.
2. THE CONTRACTOR HAS THE OPTION TO USE SHORTER BOLTS WITH A MINIMUM OF 1/2" PROTRUSION BEYOND NUT.
3. WOOD BLOCKS FOR THRIE BEAM PANELS SHALL BE 8x6x22 1/2 INCHES AND NOTCHED AS SHOWN IN THE TOP VIEW. TWO BOLTS ARE REQUIRED FOR ATTACHMENT TO THE POSTS.
4. THE 6 x 6x 14 INCH WOOD OFFSET BLOCKS ARE TO BE USED FOR REPAIR WORK ONLY.

APPROVED :

Frank Murphy

DEPUTY DIRECTOR - OPERATIONS

Khalil Zaied

DIRECTOR, DEPARTMENT OF TRANSPORTATION

CITY OF BALTIMORE
DEPARTMENT OF TRANSPORTATION
TRAFFIC DIVISION

ISSUED	REVISED	REVISED
8 / 2010		

TRAFFIC BARRIER W BEAM WITH WOOD OFFSET BLOCK

STANDARD NO.
BC 660.04

SCALE : NONE

SHEET 1 OF 1

APPROVED:

DEPUTY DIRECTOR - OPERATIONS

DIRECTOR, DEPARTMENT OF TRANSPORTATION

CITY OF BALTIMORE
DEPARTMENT OF TRANSPORTATION
TRAFFIC DIVISION

TRAFFIC BARRIER W BEAM
SHOULDER BARRIER
LAYOUT RIGHT SHOULDER

ISSUED	REVISED	REVISED
8 / 2010		

STANDARD NO.
BC 660.14

SCALE : NONE

SHEET 1 OF 1

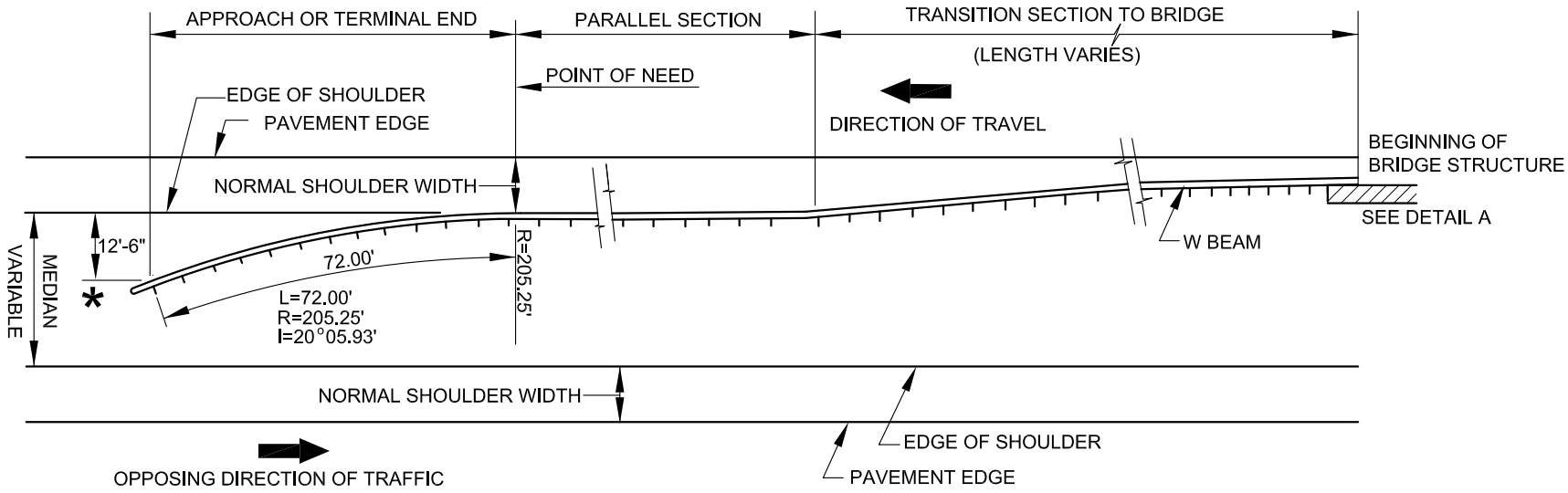

PLAN

* USE ON ALL APPROACH ENDS AND TERMINAL ENDS WHENEVER THERE IS POSSIBILITY OF IMPACTING BARRIER END BY VEHICLES FROM OPPOSING TRAFFIC LANES.

NOTE: IN APPROACH OR TERMNAL END SECTIONS POST HEIGHTS MAY AVERAGE 24" TO 30".

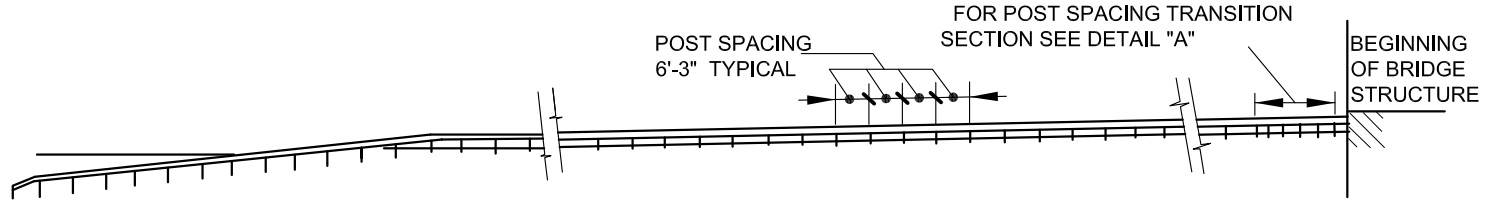

ELEVATION

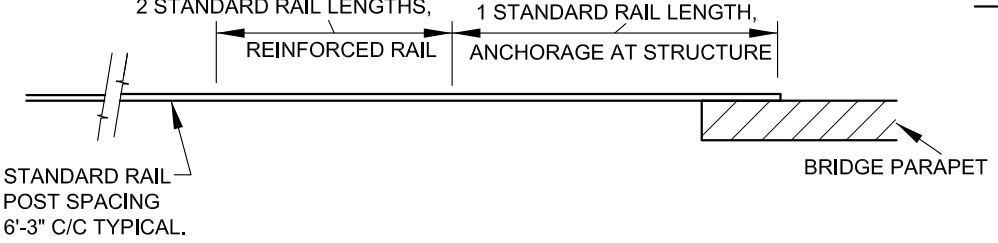

DETAIL "A"

NOTE: PARALLEL SECTION OF TRAFFIC BARRIER TO BE PLACED AT EDGE OF SHOULDER UNLESS OTHERWISE CALLED FOR ON CONTRACT DRAWINGS.

APPROVED:

DEPUTY DIRECTOR - OPERATIONS

DIRECTOR, DEPARTMENT OF TRANSPORTATION

CITY OF BALTIMORE
DEPARTMENT OF TRANSPORTATION
TRAFFIC DIVISION

TRAFFIC BARRIER W BEAM SHOULDER BARRIER TREATMENT AT OBSTACLES

STANDARD NO.
BC 660.15

ISSUED	REVISED	REVISED
8 / 2010		

SCALE : NONE

SHEET 1 OF 1

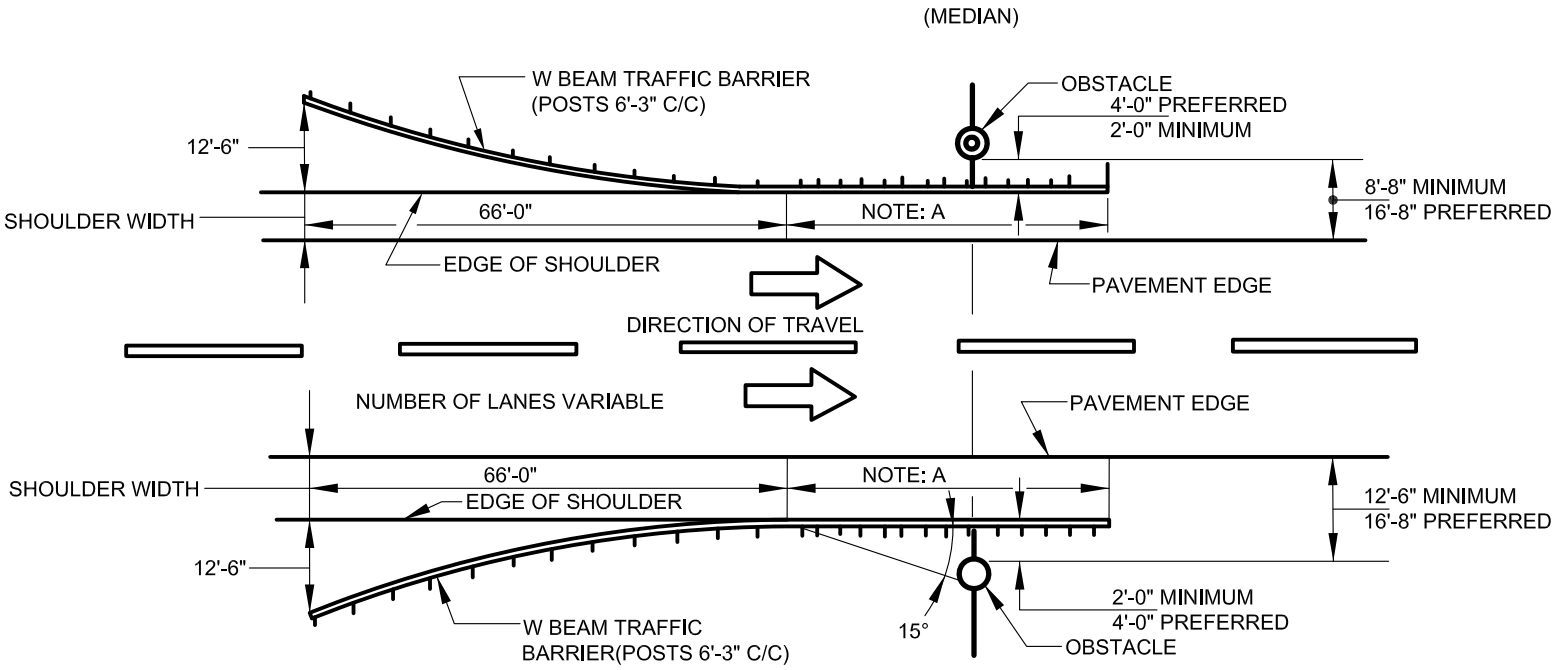

PLAN

NOTE A:
WHEN CLEARANCE FROM THE BACK FACE OF BARRIER TO THE FRONT THE FACE OF A FIXED OBJECT IS LESS THAN 4', REDUCE POST SPACING TO 3'-1$\frac{1}{2}$" C/C AND PROVIDE 2 W-BEAM SECTION BEAM LEADING TO AND 1 W-BEAM SECTION LEAVING FROM THE POINT OF THE FIXED OBJECT WITH THE 3'-1$\frac{1}{2}$" POST SPACING. HOWEVER, THE BACK CLEARANCE MUST BE 2'-0" MINIMUM.

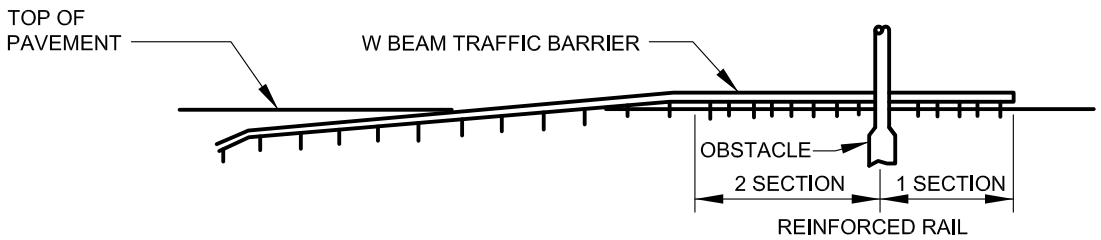

ELEVATION

NOTE:
TERMINATE REINFORCED RAIL SECTION WITH TRAIL END ANCHORAGE. STD. NO. BC 660.02

NOTE: PARALLEL SECTION OF TRAFFIC BARRIER TO BE PLACED AT EDGE OF SHOULDER UNLESS OTHERWISE CALLED FOR ON CONTRACT DRAWINGS.

NOTE: THIS BARRIER TREATMENT IN MEDIAN TO BE USED WHEN NO CONTINUOUS MEDIAN BARRIER IS CALLED FOR IN AREA OF OBSTACLES.

APPROVED:

DEPUTY DIRECTOR - OPERATIONS

DIRECTOR, DEPARTMENT OF TRANSPORTATION

CITY OF BALTIMORE
DEPARTMENT OF TRANSPORTATION
TRAFFIC DIVISION

TRAFFIC BARRIER W BEAM MEDIAN BARRIER TREATMENT AT OBSTACLES

STANDARD NO. BC 660.16

ISSUED	REVISED	REVISED
8 / 2010		

SCALE : NONE

SHEET 1 OF 1

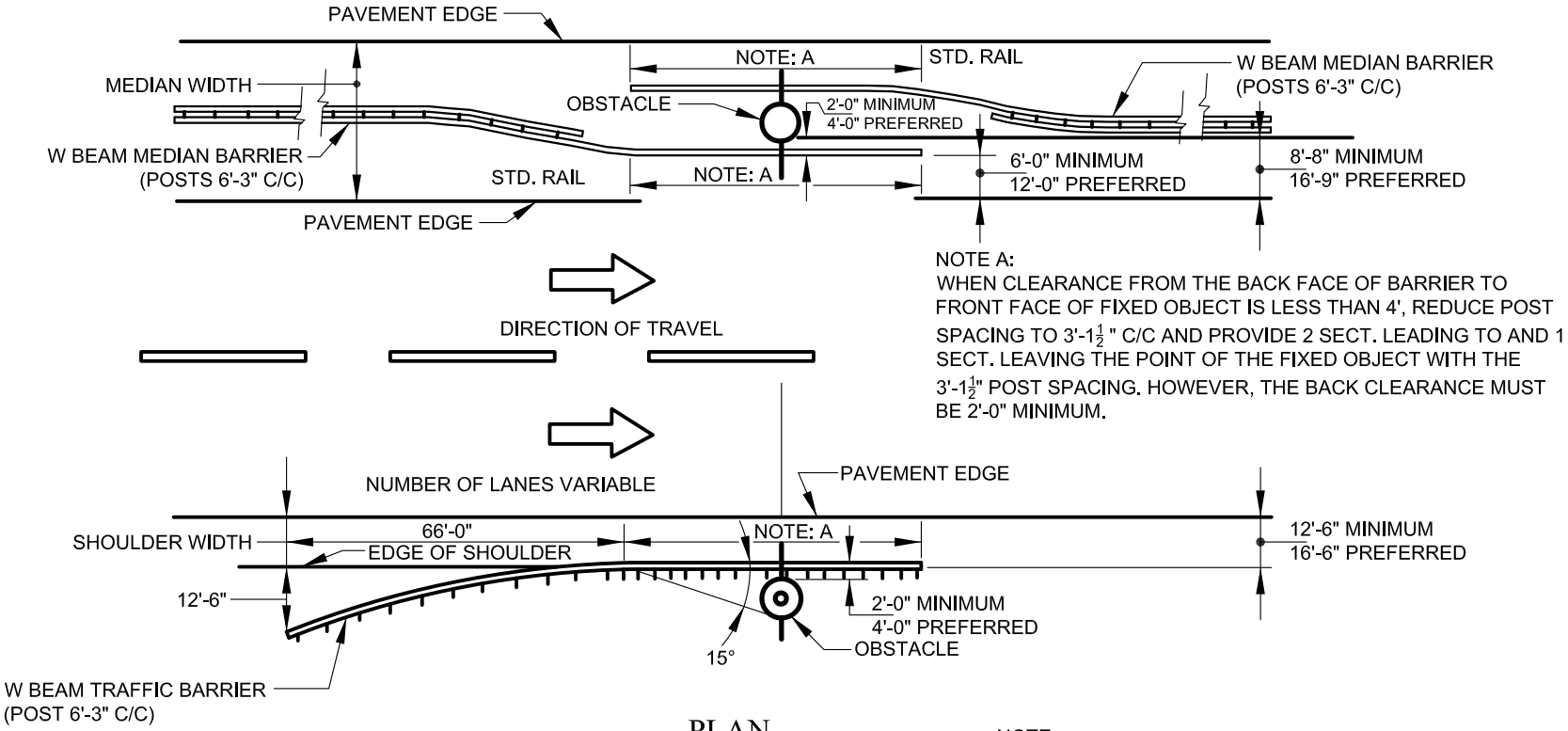

NOTE A:
WHEN CLEARANCE FROM THE BACK FACE OF BARRIER TO FRONT FACE OF FIXED OBJECT IS LESS THAN 4', REDUCE POST SPACING TO 3'-1½" C/C AND PROVIDE 2 SECT. LEADING TO AND 1 SECT. LEAVING THE POINT OF THE FIXED OBJECT WITH THE 3'-1½" POST SPACING. HOWEVER, THE BACK CLEARANCE MUST BE 2'-0" MINIMUM.

PLAN

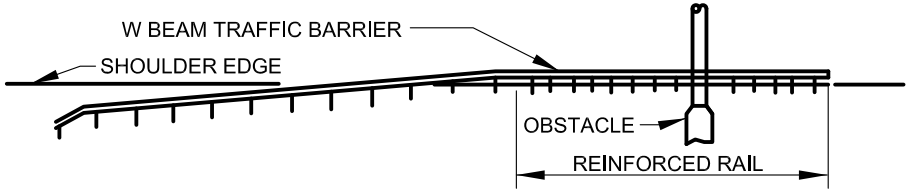

ELEVATION

NOTE:
TERMINATE REINFORCED RAIL SECTION WITH TRAIL END ANCHORAGE. STANDARD NO. BC 660.02

NOTE:
PARALLEL SECTION OF TRAFFIC BARRIER TO BE PLACED AT EDGE OF SHOULDER UNLESS OTHERWISE CALLED FOR ON THE CONTRACT DRAWINGS.

TRAFFIC BARRIER W BEAM TREATMENT FOR BRIDGE APPROACHES

(CUT ADJACENT TO BRIDGE APPROACH)

EXTEND TRAFFIC BARRIER TO CUT BACKSLOPE
AT NORMAL ELEVATION USING STANDARD
TERMINAL END SECTION.
FOR DETAILS SEE STD. N0. BC 660.01

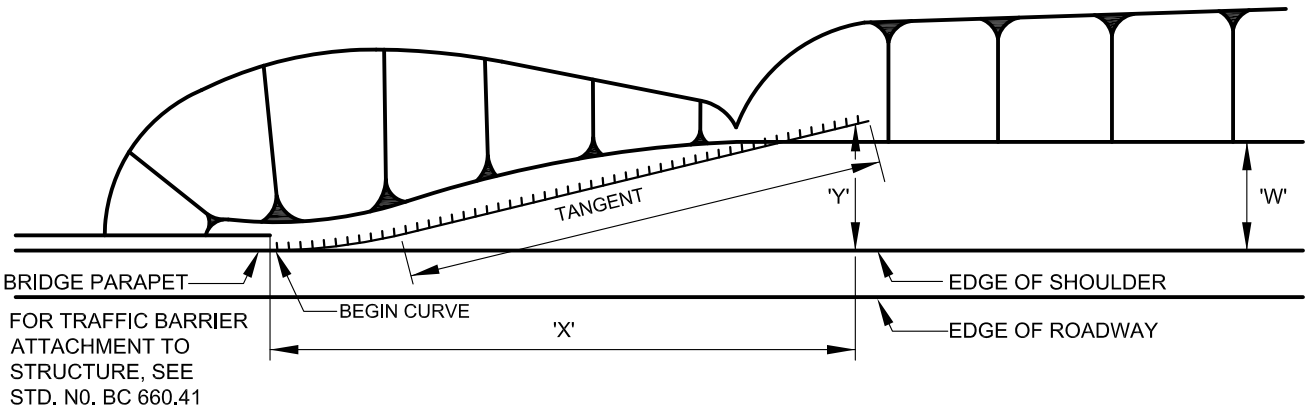

W = 12 FT.	W = 14 FT.	W = 15 FT.	W = 17 FT.	W = 20 FT.
CURVE DATA	CURVE DATA	CURVE DATA	CURVE DATA	CURVE DATA
△= 6°53'48" D = 28°38'52" R = 200.00' L = 24.07' T = 12.05'	△= 7°17'05" D = 28°38'52" R = 200.00' L = 25.43' T = 12.73'	△ = 6°53'43" D = 28°38'52" R = 200.00' L = 24.07' T = 12.05'	△= 7°11'03" D = 28°38'52" R = 200.00' L = 25.08' T = 12.56'	△= 7°07'30" D = 28°38'52" R = 200.00' L = 24.87' T = 12.45'
LENGTH OF TRAFFIC BARRIER = 162.50'(MIN.)	LENGTH OF TRAFFIC BARRIER = 175.00' (MIN.)	LENGTH OF TRAFFIC BARRIER = 187.50' (MIN.)	LENGTH OF TRAFFIC BARRIER = 200.00' (MIN.)	LENGTH OF TRAFFIC BARRIER = 212.50' (MIN.)
CUT	CUT	CUT	CUT	CUT
X Y	X Y	X Y	X Y	X Y
159.95' 17.88'	172.23' 20.39'	184.77' 20.88'	197.06' 23.25'	209.49' 24.62'

APPROVED :

Frank Murphy

DEPUTY DIRECTOR - OPERATIONS

Khalil Zaied

DIRECTOR, DEPARTMENT OF TRANSPORTATION

CITY OF BALTIMORE
DEPARTMENT OF TRANSPORTATION
TRAFFIC DIVISION

ISSUED	REVISED	REVISED
8 / 2010		

TRAFFIC BARRIER W BEAM AT BRIDGE APPROACHES CUT

STANDARD NO.
BC 660.21

SCALE : NONE

SHEET 1 OF 1

TRAFFIC BARRIER W BEAM TREATMENT FOR BRIDGE APPROACHES

(EMBANKMENT LESS THAN 15 FEET)

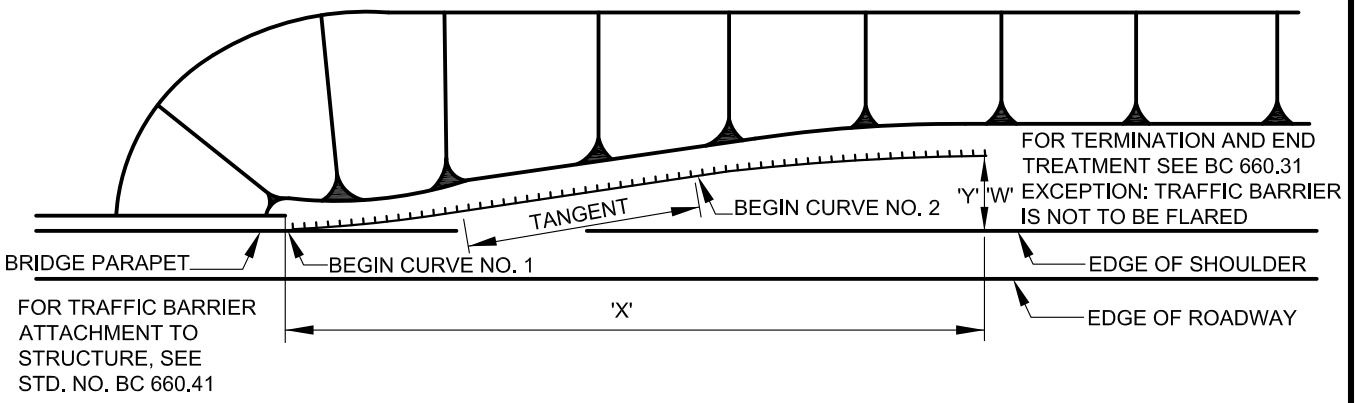

W = 12 FT.		W = 14 FT.		W = 15 FT.	
CURVE NO. 1	CURVE NO.2	CURVE NO. 1	CURVE NO.2	CURVE NO. 1	CURVE NO.2
△ = 6°53'48" D = 28°38'52" R = 200.00' L = 24.07' T = 12.05'	△ = 6°53'48" D = 14°19'26" R = 400.00' L = 48.15' T = 24.10'	△ = 7°17'05" D = 28°38'52" R = 200.00' L = 25.43' T = 12.73'	△ = 7°17'05" D = 14°19'26" R = 400.00' L = 50.86' T = 25.46'	△ = 6°53'43" D = 28°38'52" R = 200.00' L = 24.07' T = 12.05'	△ = 6°53'43" D = 14°19'26" R = 400.00' L = 48.14' T = 24.10'
LENGTH OF TRAFFIC BARRIER = 137.50' (MIN.)		LENGTH OF TRAFFIC BARRIER = 150.00' (MIN.)		LENGTH OF TRAFFIC BARRIER = 162.50' (MIN.)	
EMBANKMENT		EMBANKMENT		EMBANKMENT	
X	Y	X	Y	X	Y
135.36'	12.00'	147.71'	14.00'	160.18'	15.00'

W = 17 FT.		W = 20 FT.	
CURVE NO. 1	CURVE NO.2	CURVE NO. 1	CURVE NO.2
△ = 7°11'03" D = 28°38'52" R = 200.00' L = 25.08' T = 12.56'	△ = 7°11'03" D = 14°19'26" R = 400.00' L = 50.16' T = 25.11'	△ = 7°07'30" D = 28°38'52" R = 200.00' L = 24.87' T = 12.45'	△ = 7°07'30" D = 14°19'26" R = 400.00' L = 49.47' T = 24.90'
LENGTH OF TRAFFIC BARRIER = 175.00' (MIN.)		LENGTH OF TRAFFIC BARRIER = 200.00' (MIN.)	
EMBANKMENT		EMBANKMENT	
X	Y	X	Y
172.53'	17.00'	197.35'	20.00'

ALL DIMENSIONS ARE TO THE FACE OF THE TRAFFIC BARRIER

APPROVED :

Frank Murphy

DEPUTY DIRECTOR - OPERATIONS

Khalil Zaied

DIRECTOR, DEPARTMENT OF TRANSPORTATION

CITY OF BALTIMORE
DEPARTMENT OF TRANSPORTATION
TRAFFIC DIVISION

ISSUED	REVISED	REVISED
8 / 2010		

TRAFFIC BARRIER W BEAM AT BRIDGE APPROACHES EMBANKMENT 15' OR LESS

STANDARD NO. BC 660.22

SCALE : NONE

SHEET 1 OF 1

TRAFFIC BARRIER W BEAM TREATMENT FOR BRIDGE APPROACHES

(EMBANKMENT GREATER THAN 15 FEET)

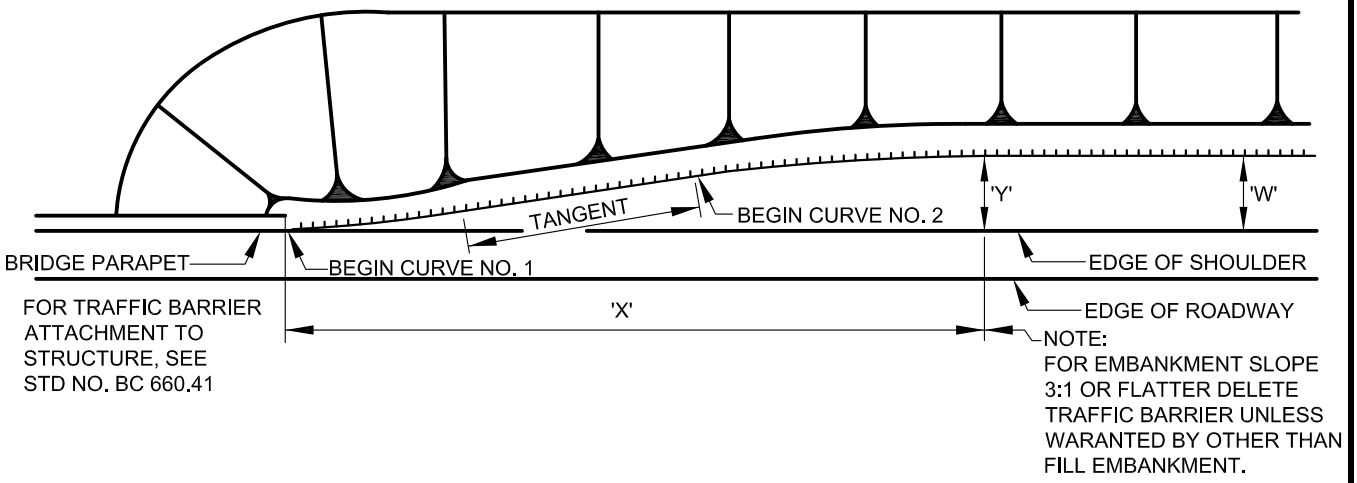

W = 12 FT.		W = 14 FT.		W = 15 FT.	
CURVE NO. 1	CURVE NO.2	CURVE NO. 1	CURVE NO.2	CURVE NO. 1	CURVE NO.2
△ = 6°53'48" D = 28°38'52" R = 200.00' L = 24.07' T = 12.05'	△ = 6°53'48" D = 14°19'26" R = 400.00' L = 48.15' T = 24.10'	△ = 7°17'05" D = 28°38'52" R = 200.00' L = 25.43' T = 12.73'	△ = 7°17'05" D = 14°19'26" R = 400.00' L = 50.86' T = 25.46'	△ = 6°53'43" D = 28°38'52" R = 200.00' L = 24.07' T = 12.05'	△ = 6°53'43" D = 14°19'26" R = 400.00' L = 48.14' T = 24.10'
LENGTH OF TRAFFIC BARRIER = 137.50' (MIN.)		LENGTH OF TRAFFIC BARRIER = 150.00' (MIN.)		LENGTH OF TRAFFIC BARRIER = 162.50' (MIN.)	
EMBANKMENT		EMBANKMENT		EMBANKMENT	
X	Y	X	Y	X	Y
135.36'	12.00'	147.71'	14.00'	160.18'	15.00'

W = 17 FT.		W = 20 FT.	
CURVE NO. 1	CURVE NO.2	CURVE NO. 1	CURVE NO.2
△ = 7°11'03" D = 28°38'52" R = 200.00' L = 25.08' T = 12.56'	△ = 7°11'03" D = 14°19'26" R = 400.00' L = 50.16' T = 25.11'	△ = 7°07'30" D = 28°38'52" R = 200.00' L = 24.87' T = 12.45'	△ = 7°07'30" D = 14°19'26" R = 400.00' L = 49.47' T = 24.90'
LENGTH OF TRAFFIC BARRIER = 175.00' (MIN.)		LENGTH OF TRAFFIC BARRIER = 200.00' (MIN.)	
EMBANKMENT		EMBANKMENT	
X	Y	X	Y
172.53'	17.00'	197.35'	20.00'

ALL DIMENSIONS ARE TO THE FACE OF THE TRAFFIC BARRIER

APPROVED :

Frank Murphy

DEPUTY DIRECTOR - OPERATIONS

Khalil Zaied

DIRECTOR, DEPARTMENT OF TRANSPORTATION

CITY OF BALTIMORE
DEPARTMENT OF TRANSPORTATION
TRAFFIC DIVISION

ISSUED	REVISED	REVISED
8 / 2010		

TRAFFIC BARRIER W BEAM AT BRIDGE APPROACHES EMBANKMENT 15' OR GREATER

STANDARD NO.
BC 660.23

SCALE : NONE

SHEET 1 OF 1



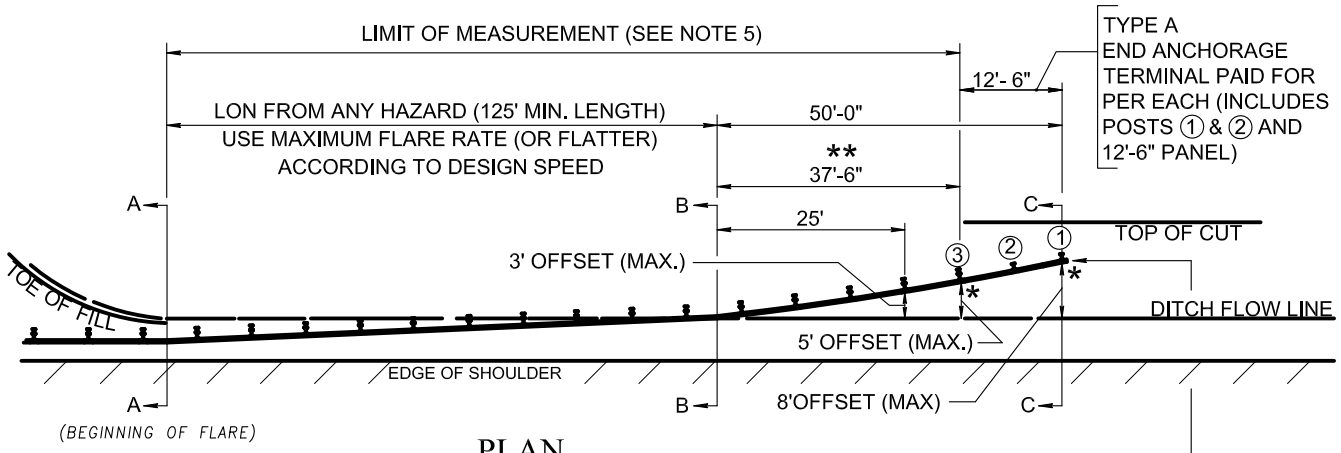

PLAN

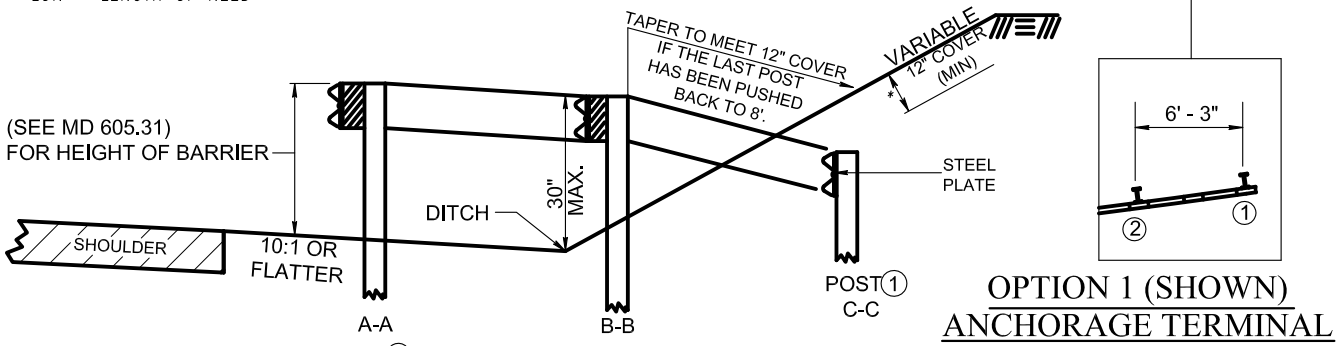

OPTION 1 (SHOWN)
ANCHORAGE TERMINAL

* WHEN EARTH COVER OVER POST ① EXCEEDS 12", OFFSET DISTANCES 5' & 8' MAY BE LESSENED. HEIGHT OF THE PANEL MUST REMAIN CONSTANT RELATIVE TO DITCH ELEVATION.

** POSTS IN BACK OF DITCH BOTTOM MAY BE SHORTENED - MINIMUM EMBEDMENT INTO EXISTING GROUND IS 4'

SECTION

NOTES

1. ALL POSTS SHALL BE 6' IN LENGTH. POSTS ① AND ② SHALL BE 4'- 0" IN LENGTH.
2. THE SLOPE BACK FILL MATERIAL SHALL BE COMPACTED FIRMLY TO THE ESTABLISHED SLOPE AND STABILIZED AS DIRECTED BY THE ENGINEER.
3. THE CONTRACTOR HAS THE OPTION TO CONSTRUCT THE END ANCHORAGE TERMINAL USING ONE OF THE TWO OPTIONS.
   OPTION 1 - 4' STEEL POSTS (SEE STD. BC 660.26)
   OPTION 2 - CONCRETE ANCHOR BLOCK (SEE STD. BC 660.27)
4. LOW SPEED INSTALLATIONS REQUIRES 50 FEET (MINIMUM) "LON".
5. PAID FOR PER LINEAR FOOT OF "TRAFFIC BARRIER W BEAM USING 6 FOOT POST." THE "END ANCHORAGE TERMINAL FOR TYPE A END TREATMENT EITHER OPTION." PAID FOR PER EACH.
6. FOR ALTERNATIVE OFFSET BLOCKS SEE SHA MD 605.21 NOTE 5.

APPROVED :

Frank Murphy

DEPUTY DIRECTOR - OPERATIONS

Khalil Zaied

DIRECTOR, DEPARTMENT OF TRANSPORTATION

CITY OF BALTIMORE
DEPARTMENT OF TRANSPORTATION
TRAFFIC DIVISION

ISSUED	REVISED	REVISED
8 / 2010		

TRAFFIC BARRIER W BEAM WITH TYPE A END ANCHORAGE (SINGLE RAIL)

STANDARD NO.
BC 660.24

SCALE : NONE | SHEET 1 OF 1



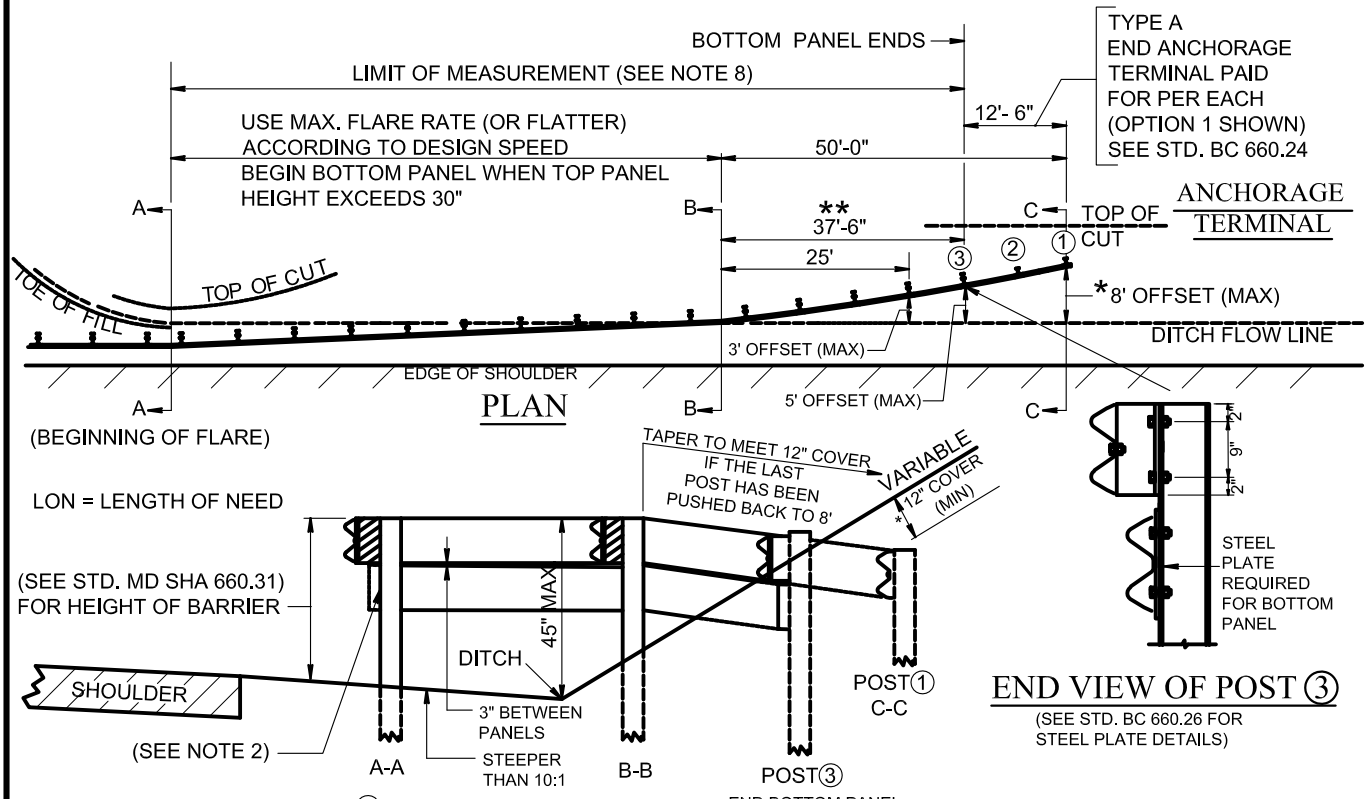

* WHEN EARTH COVER OVER POST ① EXCEEDS 12", OFFSET DISTANCES 5' & 8' MAY BE LESSENED. HEIGHT OF THE PANEL MUST REMAIN CONSTANT RELATIVE TO DITCH ELEVATION.

** POSTS IN BACK OF DITCH BOTTOM MAY BE SHORTENED - MINIMUM EMBEDMENT INTO EXISTING GROUND IS 4'.

SECTION

NOTES

1. ALL POSTS SHALL BE 8' IN LENGTH INCLUDING POST ③ . POSTS ① & ② SHALL BE 4' IN LENGTH.
2. THE BOTTOM PANEL SHALL BE TUCKED BEHIND AND BOLTED TO POST A-A USING A 5/8" DIA. HEX. HEAD BOLT.
3. OFFSET BLOCKS ARE NOT USED FOR THE BOTTOM PANEL.
4. MAINTAIN HEIGHT OF TOP PANEL RELATIVE TO EDGE OF SHOULDER UNTIL A MAXIMUM HEIGHT OF 45" ABOVE GROUND IS REACHED.
5. THE SLOPE BACK FILL MATERIAL SHALL BE COMPACTED FIRMLY TO THE ESTABLISHED SLOPE AND STABILIZED AS DIRECTED BY THE ENGINEER.
6. THE CONTRACTOR HAS THE OPTION TO CONSTRUCT THE END ANCHORAGE TERMINAL USING ONE OF THE FOLLOWING TWO OPTIONS:
   OPTION 1 - 4' STEEL POSTS (SEE STD. BC 660.24 & BC 660.26)
   OPTION 2 - CONCRETE ANCHOR BLOCK (SEE STD. BC 660.27)
7. LOW SPEED INSTALLATIONS REQUIRE 50 FEET (MINIMUM) "LON".
8. TOP PANEL PAID FOR PER LINEAR FOOT OF "TRAFFIC BARRIER W BEAM USING 8 FOOT POST" (FROM POST A-A, TO & INCLUDING POST ③). BOTTOM PANEL PAID FOR PER LINEAR FOOT OF "TRAFFIC BARRIER W BEAM PANEL." THE END ANCHORAGE TERMINAL FOR TYPE A END TREATMENT (EITHER OPTION) PAID FOR PER EACH.
9. FOR ALTERNATIVE OFFSET BLOCKS SEE STD. SHA MD 605.21 NOTE 5.

CITY OF BALTIMORE 1797

APPROVED :

Frank Murphy

DEPUTY DIRECTOR - OPERATIONS

Khalil Zaied

DIRECTOR, DEPARTMENT OF TRANSPORTATION

CITY OF BALTIMORE
DEPARTMENT OF TRANSPORTATION
TRAFFIC DIVISION

ISSUED	REVISED	REVISED
8 / 2010		

TRAFFIC BARRIER W BEAM WITH TYPE A END ANCHORAGE (DOUBLE RAIL)

STANDARD NO.
BC 660.25

SCALE : NONE

SHEET 1 OF 1

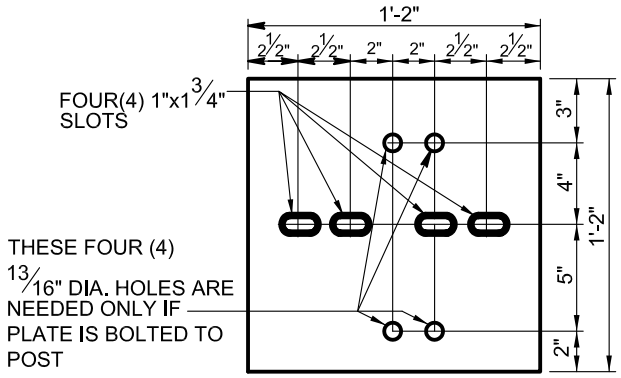

1/2" STEEL PLATE
(GALVANIZED)
WELDED OR BOLTED TO POSTS ① AND ②
BURIED IN BACK SLOPE

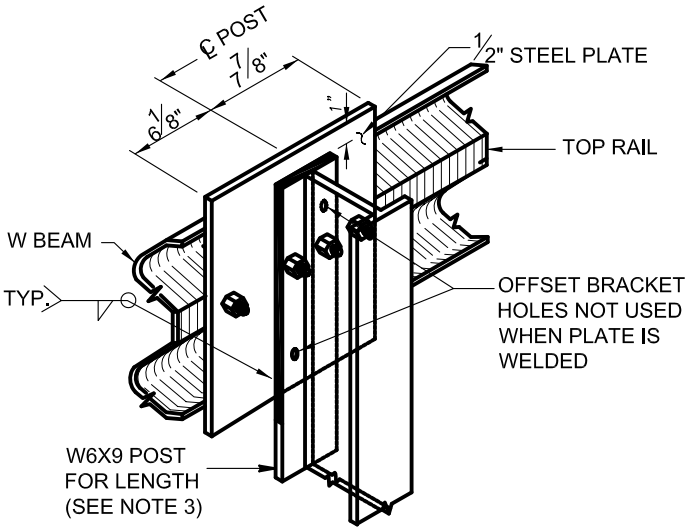

1/2" STEEL PLATE ATTACHED TO POSTS①&②

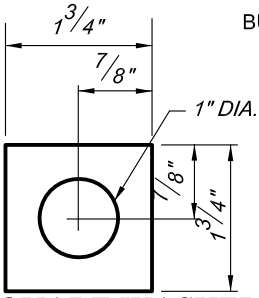

SQUARE WASHER
(3/16" THICK GALVANIZED)

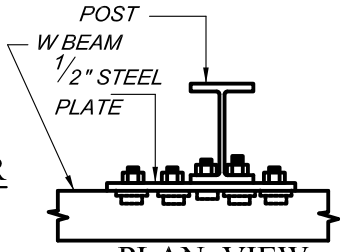

PLAN VIEW
(BOLTED)

NOTES

1. *THE ½" STEEL PLATE SHALL CONFORM TO THE REQUIREMENTS OF A-36. THE PLATE MAY BE WELDED OR BOLTED TO POSTS ① AND ② BURIED IN THE CUT SLOPE.*
2. *FIELD DRILLED HOLES AND WELDED AREAS SHALL BE COATED WITH ZINC RICH PAINT.*
3. *SINGLE OR DOUBLE RAIL POSTS ① AND ② LENGTH 4'- 0". POST ③ LENGTH 8'- 0" WHEN DOUBLE RAIL IS USED. FOR SINGLE RAIL POST ③ LENGTH IS 6'-0"*
4. *A STEEL PLATE SHALL BE USED ON POST ③ WHEN THE DOUBLE RAIL SYSTEM IS USED.*

THREE (3) 1" DIA. HOLES TO BE FIELD DRILLED IN W BEAM ELEMENT AND ATTACHED WITH ⅝" DIA. HEX. HEAD BOLTS 1½" LONG EACH WITH ONE SQUARE WASHER AND HEX NUT

1" DIA. HOLE TO BE FIELD DRILLED THROUGH W BEAM AND THROUGH POST FLANGE. ATTACH W BEAM WITH ⅝" HEX. HEAD BOLT 2" LONG WITH ONE SQUARE WASHER AND HEX NUT

DRILL EXTRA 13/16" DIA. HOLE IN POST FLANGE. (HOLE NOT NEEDED WHEN PLATE IS TO BE WELDED TO POST)

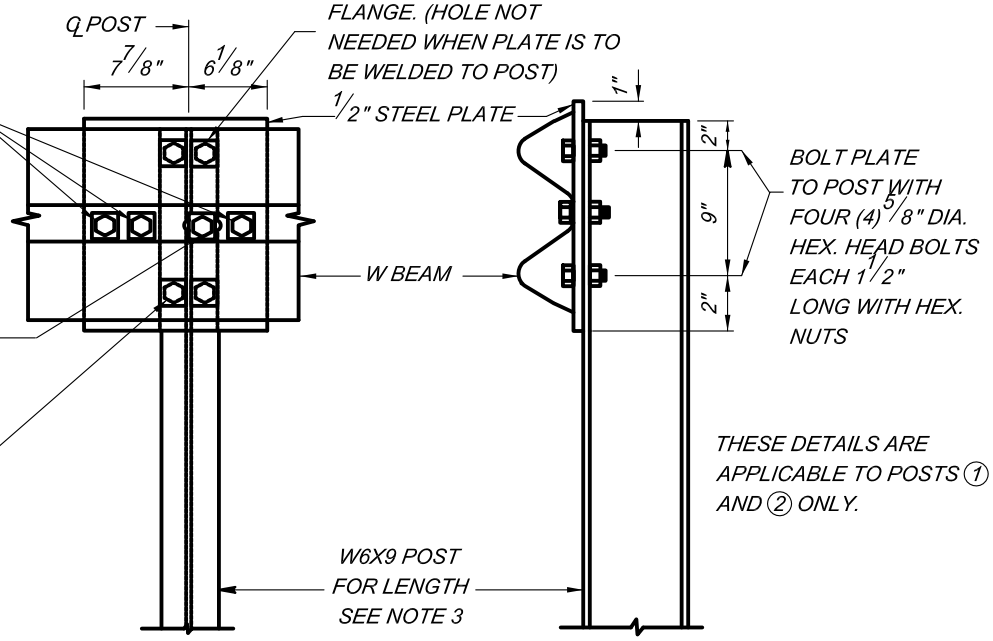

THESE DETAILS ARE APPLICABLE TO POSTS ① AND ② ONLY.

FRONT VIEW

END VIEW

1/2" STEEL PLATE BOLTED TO POSTS①&②

APPROVED :
Frank Murphy
DEPUTY DIRECTOR - OPERATIONS
Khalil Zaied
DIRECTOR, DEPARTMENT OF TRANSPORTATION

CITY OF BALTIMORE
DEPARTMENT OF TRANSPORTATION
TRAFFIC DIVISION

ISSUED	REVISED	REVISED
8 / 2010		

TRAFFIC BARRIER W BEAM WITH TYPE A END ANCHORAGE (OPTION 1)

STANDARD NO.
BC 660.26

SCALE : NONE | SHEET 1 OF 1

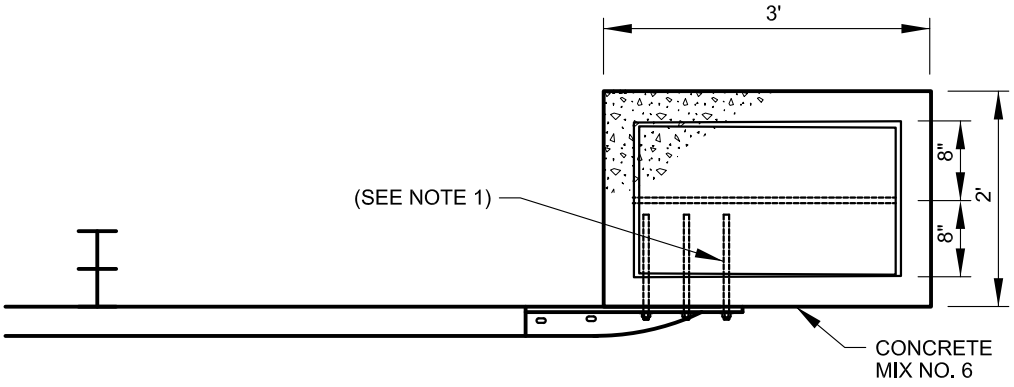

PLAN VIEW

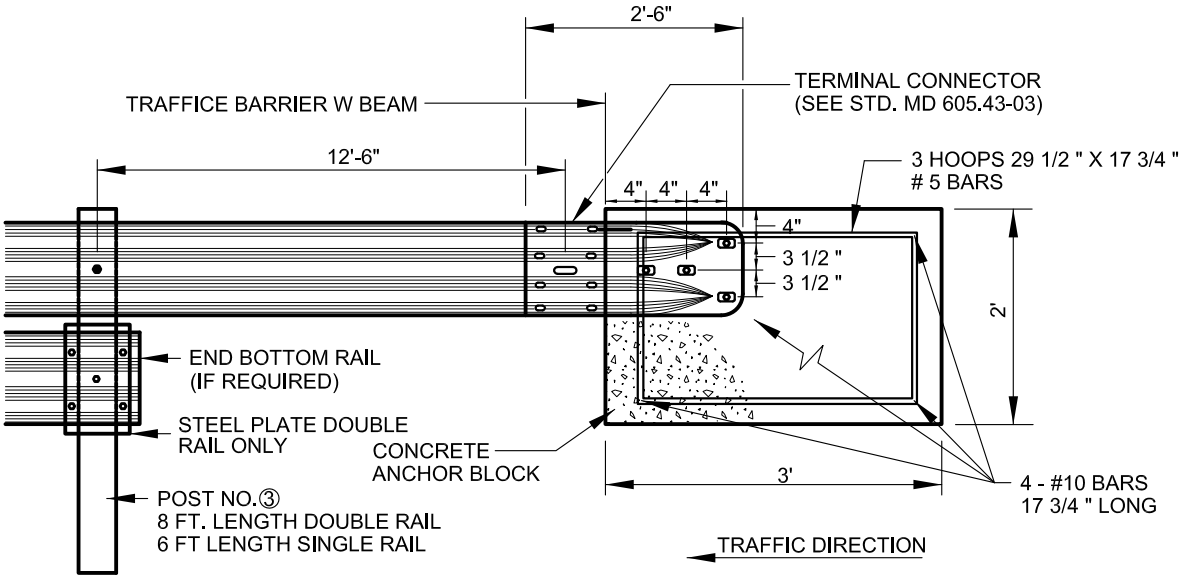

FRONT VIEW

NOTES

1. THE CONTRACTOR SHALL FURNISH AND INSTALL FOUR (4) 7/8 " DIA X 10" LENGTH HEAVY DUTY GALV. THREADED ANCHOR RODS WITH HEX HEAD RECESSED NUTS AND RECTANGULAR PLATE WASHERS. ANCHOR RODS SHALL BE ANCHORED WITH EPOXY GROUT AS SPECIFIED IN MD SHA STD. SPECIFICATIONS 902.
2. THIS OPTION REPLACES POSTS ① AND ② AS SHOWN IN OPTION 1
3. CONCRETE ANCHOR BLOCK MAY BE PRECAST OR CAST IN PLACE.
4. THE COST OF THE TERMINAL CONNECTOR SHALL BE INCIDENTAL TO THE CONTRACT PRICE PER EACH FOR THE TYPE A END ANCHORAGE TERMINAL.

APPROVED :

Frank Murphy

DEPUTY DIRECTOR - OPERATIONS

Khalil Zaied

DIRECTOR, DEPARTMENT OF TRANSPORTATION

CITY OF BALTIMORE
DEPARTMENT OF TRANSPORTATION
TRAFFIC DIVISION

ISSUED	REVISED	REVISED
8 / 2010		

TRAFFIC BARRIER W BEAM WITH TYPE A END ANCHORAGE (OPTION 2)

STANDARD NO.
BC 660.27

SCALE : NONE

SHEET 1 OF 1



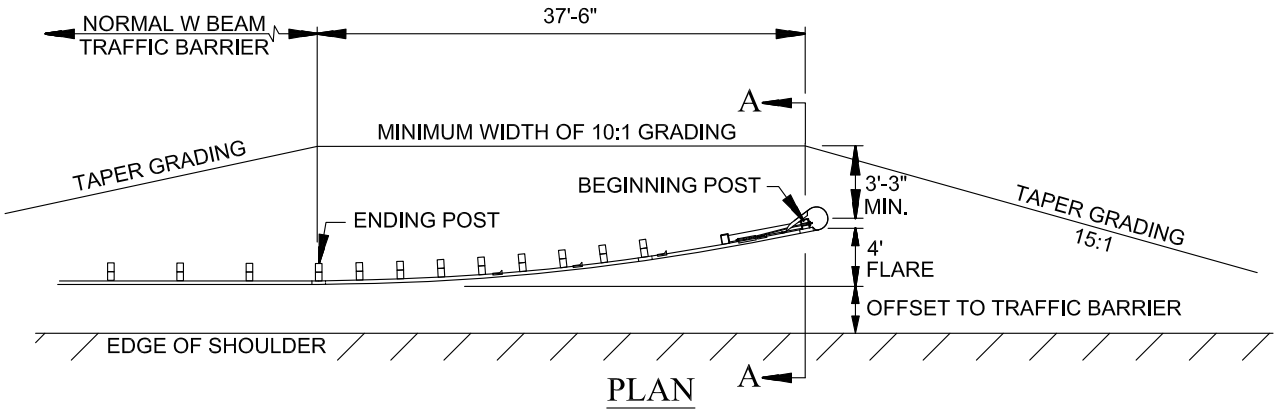

PLAN

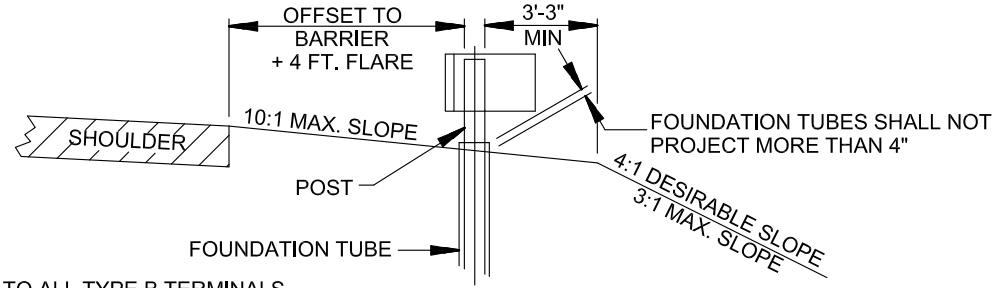

APPLICABLE TO ALL TYPE B TERMINALS

SECTION A-A

NOTES

1. 6:1 MAX GRADING IS ALLOWABLE WHEN THE BARRIER IS LOCATED 12 FT. OR MORE FROM THE OUTSIDE EDGE OF SHOULDER.
2. ADD DELINEATION ON END OF TREATMENT AS DIRECTED BY THE OFFICE OF BALTIMORE CITY TRAFFIC DIVISION.
3. 4' FLARE REQUIRED
4. TYPE B TERMINAL SHALL ONLY BE USED WHEN THE GRADING AS SHOWN AND THE REQUIRED LENGTH OF NEED IS PROVIDED.

APPROVED :

Frank Murphy

DEPUTY DIRECTOR - OPERATIONS

Khalil Zaied

DIRECTOR, DEPARTMENT OF TRANSPORTATION

CITY OF BALTIMORE
DEPARTMENT OF TRANSPORTATION
TRAFFIC DIVISION

ISSUED	REVISED	REVISED
8 / 2010		

TYPE B TRAFFIC BARRIER END TREATMENT

STANDARD NO.
BC 660.28

SCALE : NONE

SHEET 1 OF 1



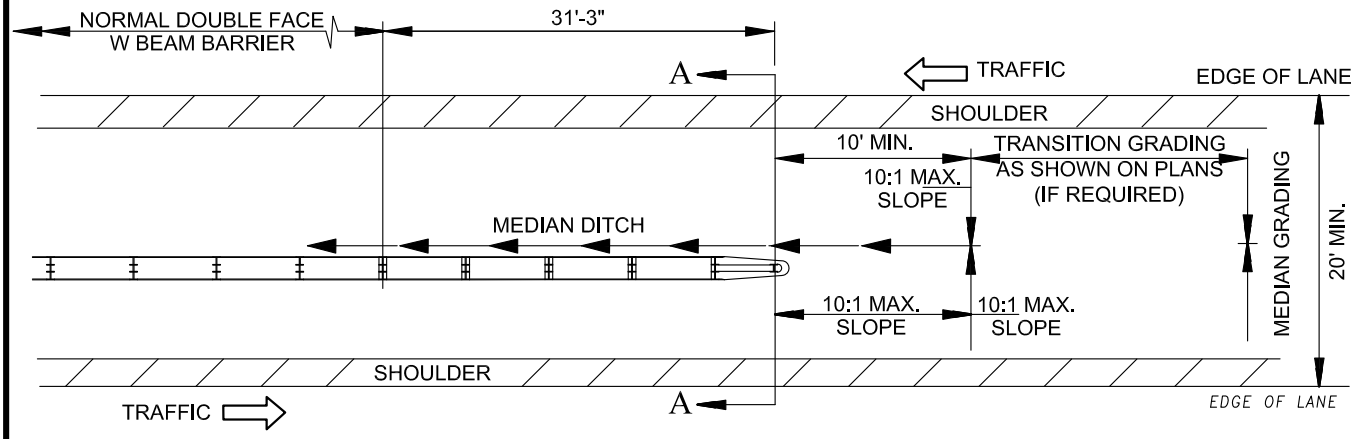

PLAN

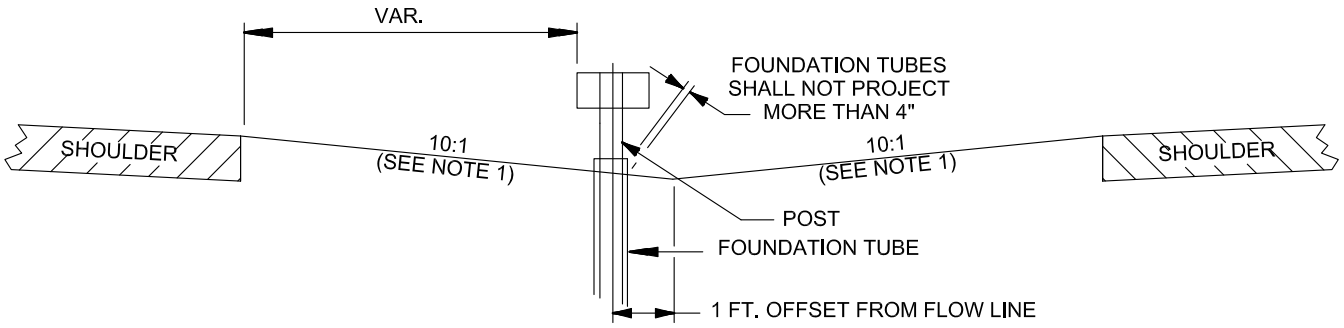

SECTION A-A

NOTES

1. 6:1 MAX GRADING IS ALLOWABLE WHEN THE BARRIER IS LOCATED 12 FT. OR MORE FROM THE OUTSIDE EDGE OF SHOULDER.
2. THIS END TREATMENT CAN ALSO BE USED IN RAMP GORES OR OTHER AREAS WHERE 2 SECTIONS OF W BEAM SYSTEM COME TOGETHER AND TERMINATE WITH ONE END TREATMENT.
3. WHEN OPPOSING ROADWAYS HAVE EQUAL ELEVATIONS THE TRAFFIC BARRIER SYSTEM SHOULD BE PLACED ON THE OPPOSITE SIDE OF THE DITCH LINE FROM APPROACHING TRAFFIC.
4. ADD DELINEATION ON END OF TREATMENT AS DIRECTED BY THE BALTIMORE CITY TRAFFIC DIVISION.

APPROVED:

Frank Murphy
DEPUTY DIRECTOR - OPERATIONS

Khalil Zaied
DIRECTOR, DEPARTMENT OF TRANSPORTATION

CITY OF BALTIMORE
DEPARTMENT OF TRANSPORTATION
TRAFFIC DIVISION

ISSUED	REVISED	REVISED
8 / 2010		

TYPE D TRAFFIC BARRIER END TREATMENT

STANDARD NO.
BC 660.29

SCALE : NONE

SHEET 1 OF 1

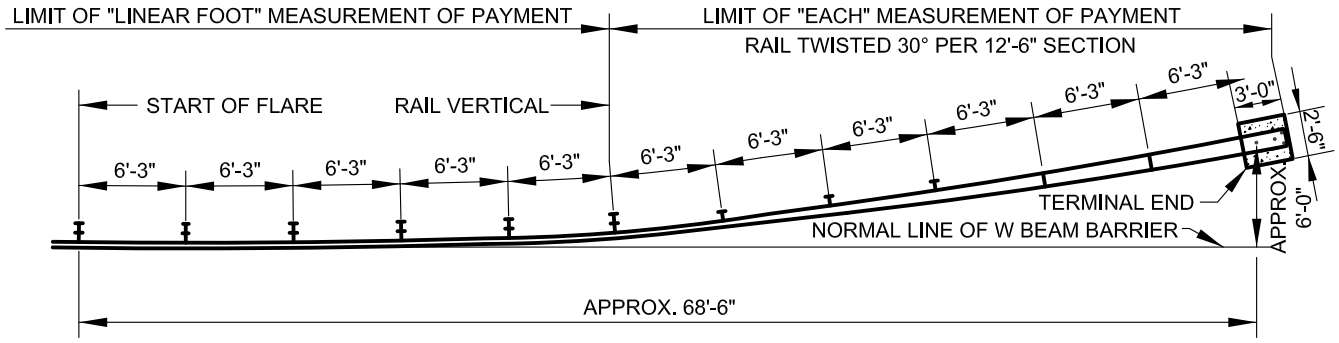

PLAN

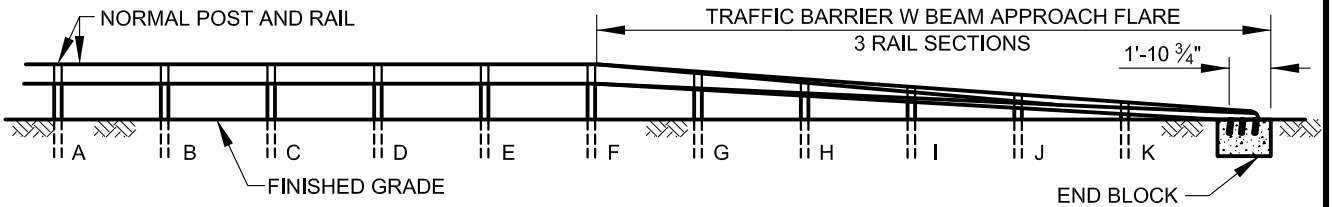

ELEVATION

POST	A	B	C	D	E	F	G	H	I	J	K	BOLT
H	2'-3"	2'-3"	2'-3"	2'-3"	2'-3"	2'-3"	1'-3 ½"	0'-11 ⅞"	0'-8 ¼"	0'-4 ⅝"	0'-1"	0'-0"
β	0°	0°	0°	0°	0°	0°	15°	30°	45°	60°	75°	90°

H HEIGHT OF TOP OF POST ABOVE FINISHED GRADE
β ANGLE OF PITCH OF W BEAM BARRIER & ANCHORAGE CASTING

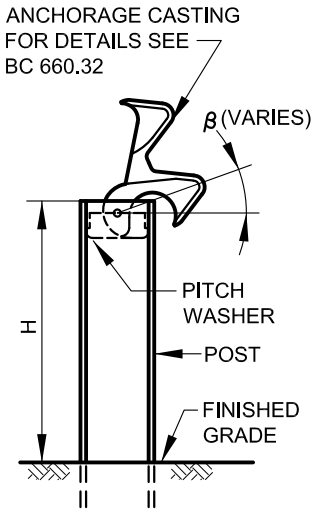

USE OF ANCHORAGE CASTING IN PLACE OF OFFSET BRACKETS BEGINS AT POST G WITH A CASTING ANGLE OF 15° .

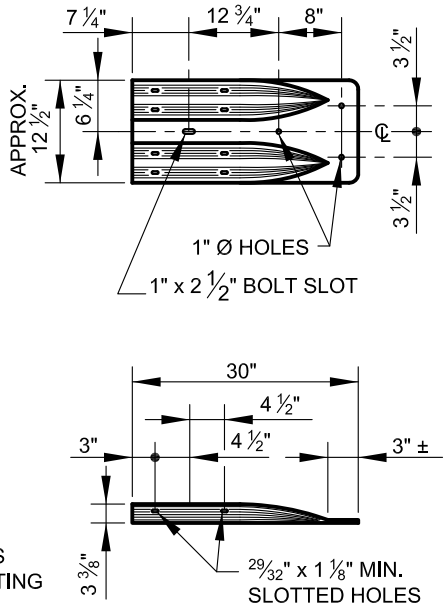

W BEAM
TERMINAL END DETAILS
MATERIAL: 10 GA. STEEL

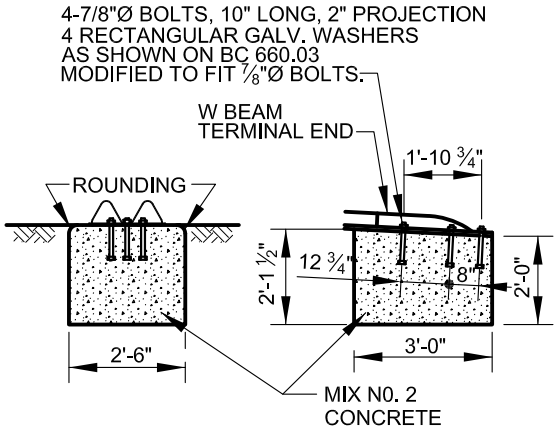

FRONT ELEVATION

W BEAM BARRIER END BLOCK

APPROVED :
Frank Murphy
DEPUTY DIRECTOR - OPERATIONS
Khalil Zaied
DIRECTOR, DEPARTMENT OF TRANSPORTATION

CITY OF BALTIMORE
DEPARTMENT OF TRANSPORTATION
TRAFFIC DIVISION

ISSUED	REVISED	REVISED
8 / 2010		

TRAFFIC BARRIER W BEAM APPROACH FLARE

STANDARD NO.
BC 660.31

SCALE : NONE | SHEET 1 OF 1

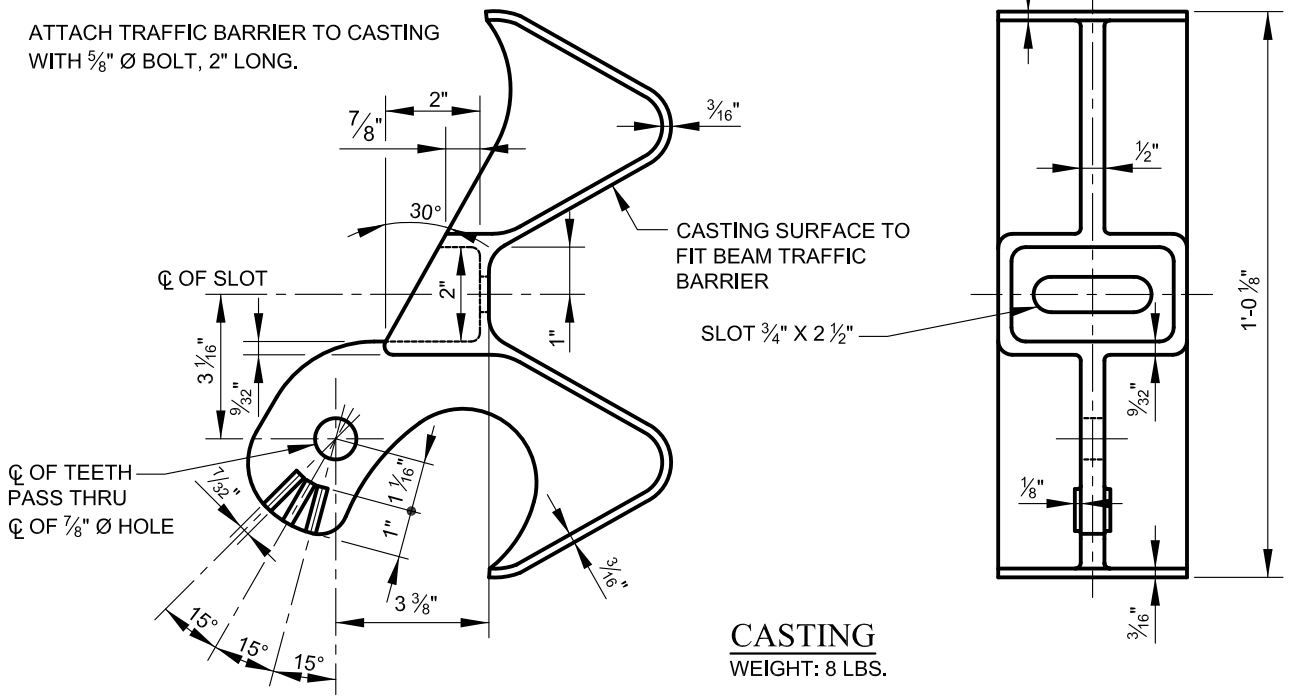

CASTING
WEIGHT: 8 LBS.

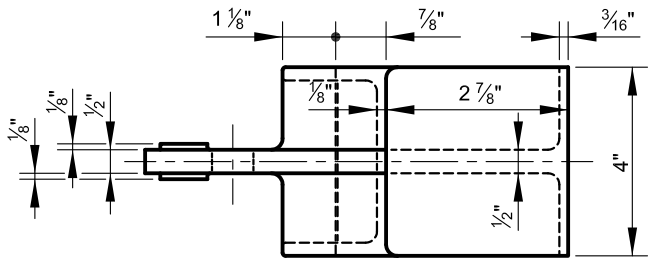

MATERIAL REQUIREMENTS:

1. THE METAL CASTING SHALL CONFORM TO THE A.S.T.M. DESIGNATION A-220, GRADE 45010.
2. THE ZINC COATING SHALL CONFORM TO THE A.S.T.M. DESIGNATION A-153, CLASS A.
3. ALL PARTS TO BE GALVANIZED.

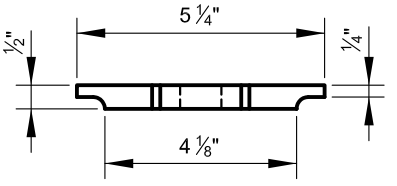

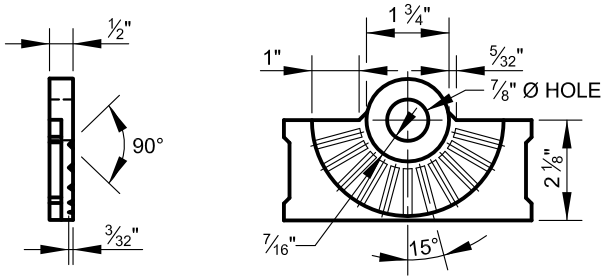

PITCH WASHER
WEIGHT: 1 LB.

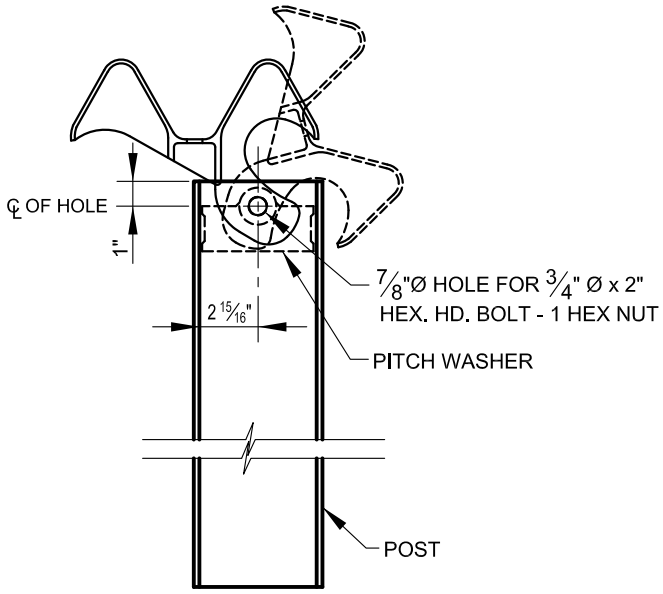

METHOD OF ANCHORAGE

APPROVED :
Frank Murphy
DEPUTY DIRECTOR - OPERATIONS
Khalil Zaied
DIRECTOR, DEPARTMENT OF TRANSPORTATION

CITY OF BALTIMORE
DEPARTMENT OF TRANSPORTATION
TRAFFIC DIVISION

ISSUED	REVISED	REVISED
8 / 2010		

TRAFFIC BARRIER W BEAM ANCHORAGE CASTING

STANDARD NO.
BC 660.32

SCALE : NONE | SHEET 1 OF 1

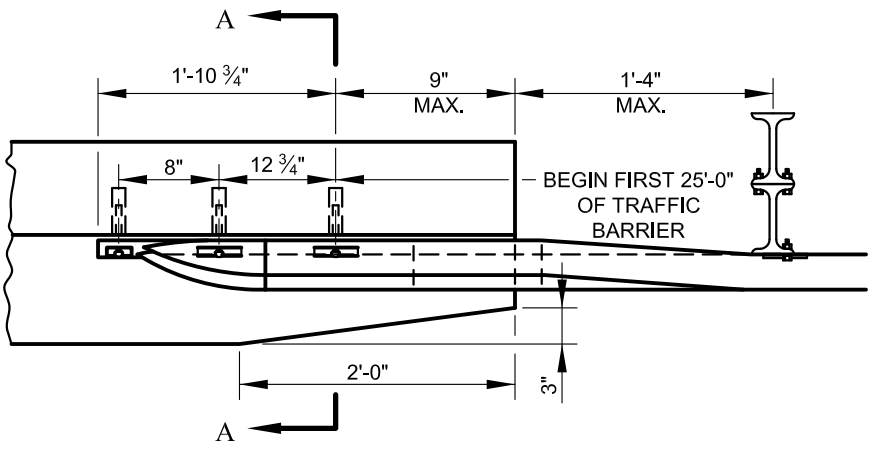

PLAN

ROAD CONTRACTOR SHALL FURNISH AND INSTALL 4 - 7/8" Ø CONCRETE EXPANSION ANCHORS OR APPROVED EQUIVALENT, IN 1-1/8" Ø DRILLED HOLES WITH 4-7/8" Ø HEAVY HEX. HEAD BOLTS. 1-1/2" LONG GALV. UNC CLASS 2A & 2B. AND 4 RECTANGULAR GALV. WASHERS AS SHOWN ON BC 660.03 MODIFIED TO FIT 7/8" Ø BOLT.

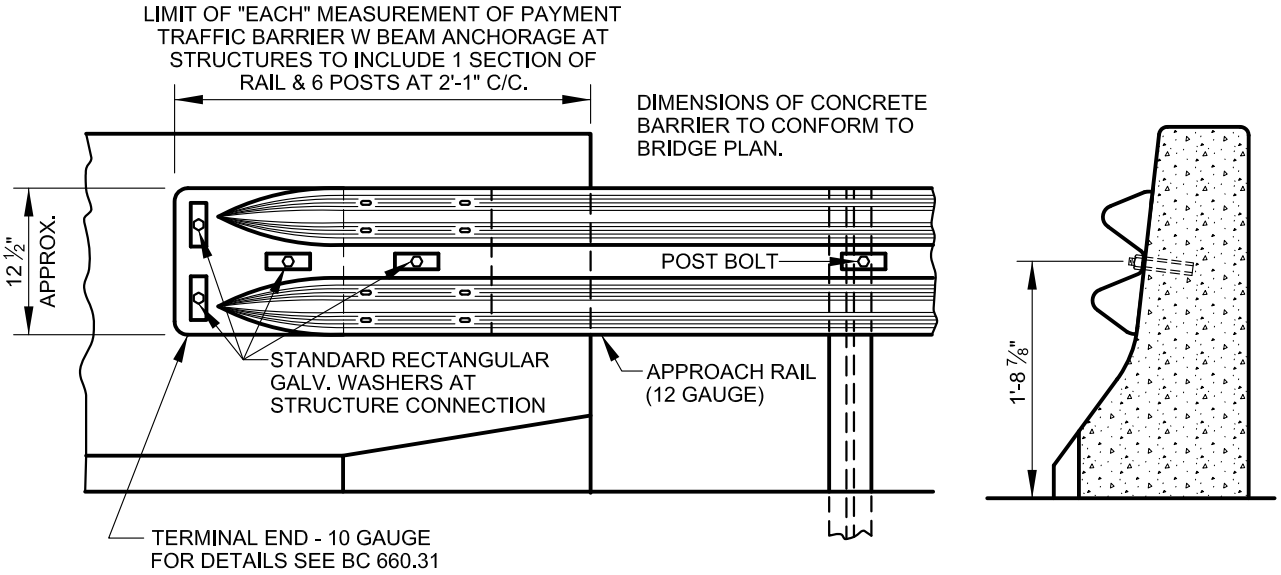

ELEVATION

SECTION 'A-A'

GENERAL NOTES

1. FIRST 12'-6" OF TRAFFIC BARRIER AFFIXED TO BRIDGE ON THE APPROACH END. PLACE FIRST POST MAXIMUM 1'-4" FROM BRIDGE AND NEXT SIX POSTS SPACED 2'-1" C/C. PLACE AN ADDITIONAL OFFSET BRACKET TO AVOID CONFLICT WITH INLETS.

2. WHEN AFFIXING TRAFFIC BARRIER TO BRIDGE ON THE TRAILING END, USE NORMAL POST SPACING WITH AN ADDITIONAL OFFSET BRACKET PLACED AT THE SECOND POST TO AVOID CONFLICT WITH INLETS. FOR STD. TRAFFIC BARRIER POST SPACING, SEE BC 660.01.

3. NON-DIVIDED HIGHWAYS WITH OPPOSING TRAFFIC, APPROACH SECTIONS SHALL BE INSTALLED AT EACH CORNER OF STRUCTURE.

4. IN GENERAL OFFSET BRACKETS SHALL BE USED WHEREVER NECESSARY TO AVOID CONFLICT WITH DRAINAGE INLETS.

APPROVED :

Frank Murphy

DEPUTY DIRECTOR - OPERATIONS

Khalil Zaied

DIRECTOR, DEPARTMENT OF TRANSPORTATION

CITY OF BALTIMORE
DEPARTMENT OF TRANSPORTATION
TRAFFIC DIVISION

ISSUED	REVISED	REVISED
8 / 2010		

TRAFFIC BARRIER W BEAM ANCHORAGE AT STRUCTURES

STANDARD NO.
BC 660.41

SCALE : NONE

SHEET 1 OF 1

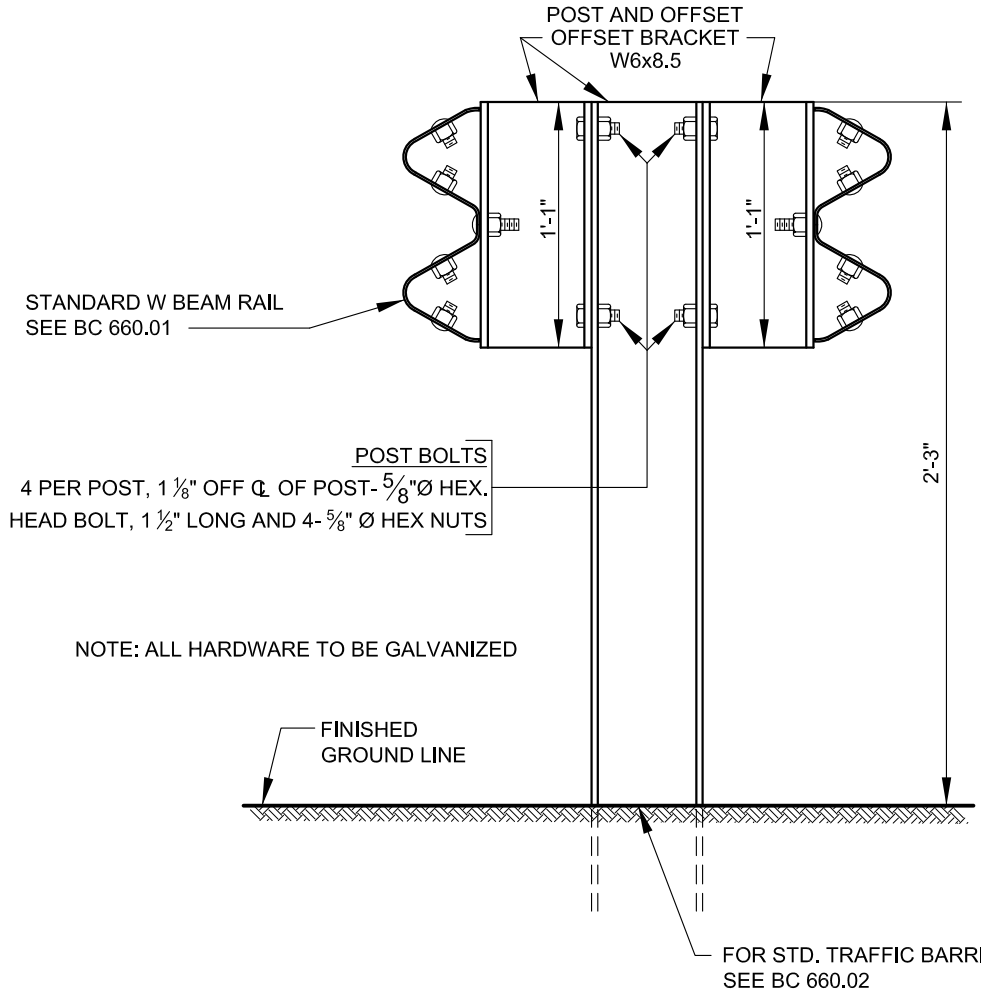

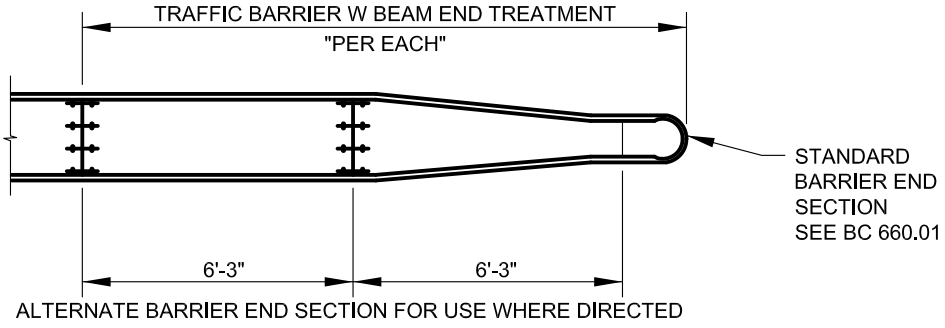

ALTERNATE BARRIER END SECTION FOR USE WHERE DIRECTED

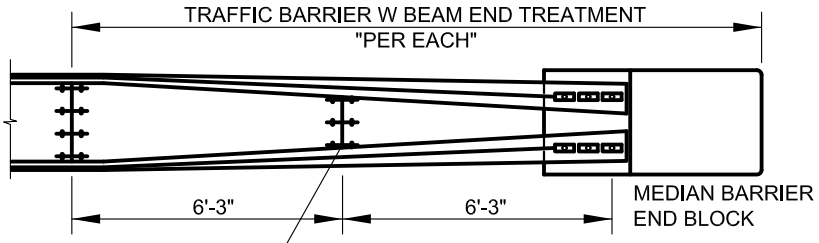

RAIL TWISTED ON ANCHORAGE CASTING
AT 30°-MOUNTED ON OFFSET BRACKET

FOR "MEDIAN BARRIER END BLOCK" SEE BC 660.52
FOR TREATMENT OF RAIL SEE BC 660.31

APPROVED :

Frank Murphy

DEPUTY DIRECTOR - OPERATIONS

Khalil Zaied

DIRECTOR, DEPARTMENT OF TRANSPORTATION

CITY OF BALTIMORE
DEPARTMENT OF TRANSPORTATION
TRAFFIC DIVISION

ISSUED	REVISED	REVISED
8 / 2010		

TRAFFIC BARRIER W BEAM MEDIAN BARRIER END TREATMENT

STANDARD NO.
BC 660.51

SCALE : NONE

SHEET 1 OF 1

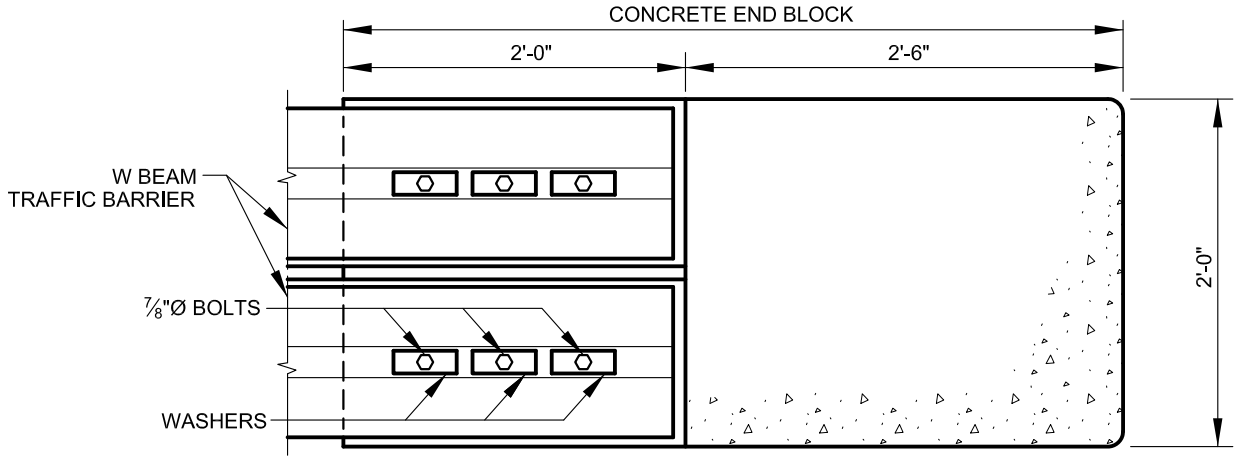

PLAN

NOTE: FOR W BEAM ANCHORAGE CASTING SEE STD. NO. BC 660.51

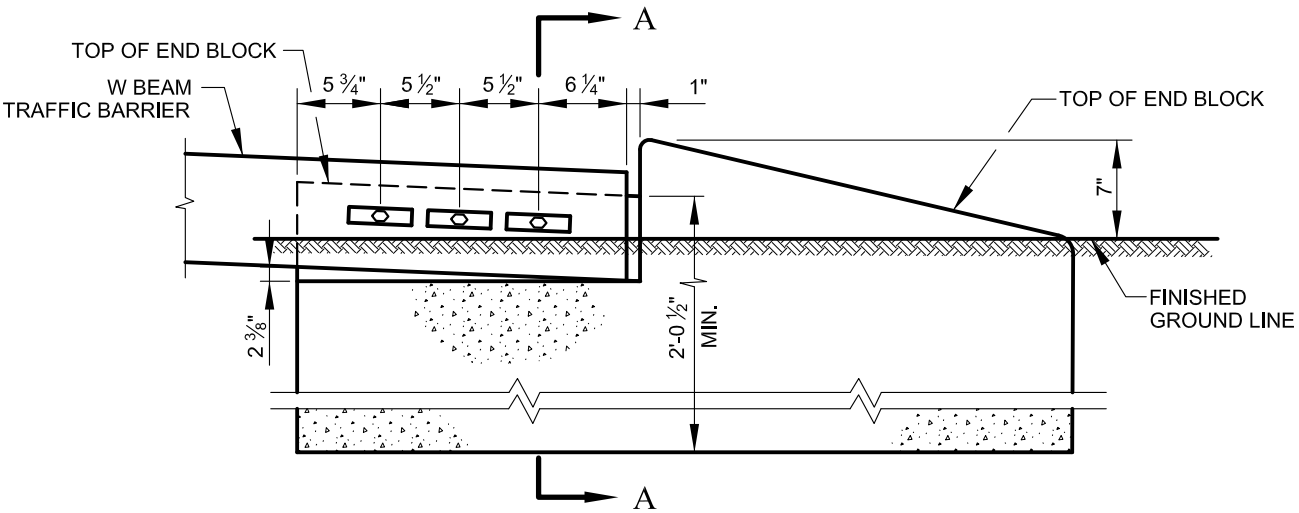

ELEVATION

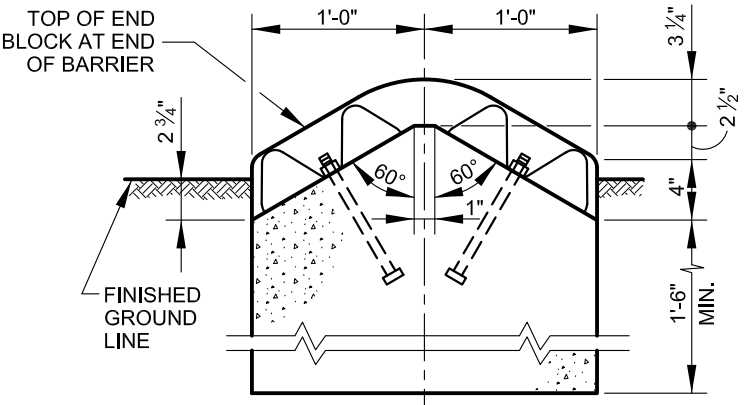

SECTION 'A-A'

INSTALL 6-7/8" Ø BOLTS, 10" LONG, 2" PROJECTION WITH 6-7/8" Ø HEX NUTS, AND 6 RECTANGULAR GALVANIZED WASHERS AS SHOWN ON BC 660.03, MODIFIED TO FIT 7/8" Ø BOLTS. CONCRETE FOR END BLOCK TO BE MIX NO. 2 CONCRETE.

NOTE: ALL HARDWARE TO BE GALVANIZED

NOTE: THE USE OF THIS END TREATMENT IS LIMITED TO POSTED SPEEDS OF 30 MPH OR LESS

APPROVED:

Frank Murphy

DEPUTY DIRECTOR - OPERATIONS

Khalil Zaied

DIRECTOR, DEPARTMENT OF TRANSPORTATION

CITY OF BALTIMORE
DEPARTMENT OF TRANSPORTATION
TRAFFIC DIVISION

ISSUED	REVISED	REVISED
8 / 2010		

TRAFFIC BARRIER W BEAM
MEDIAN BARRIER
END BLOCK

STANDARD NO.
BC 660.52

SCALE : NONE

SHEET 1 OF 1

APPROVED:

DEPUTY DIRECTOR - OPERATIONS

DIRECTOR, DEPARTMENT OF TRANSPORTATION

CITY OF BALTIMORE
DEPARTMENT OF TRANSPORTATION
TRAFFIC DIVISION

TRAFFIC BARRIER W BEAM BARRICADE

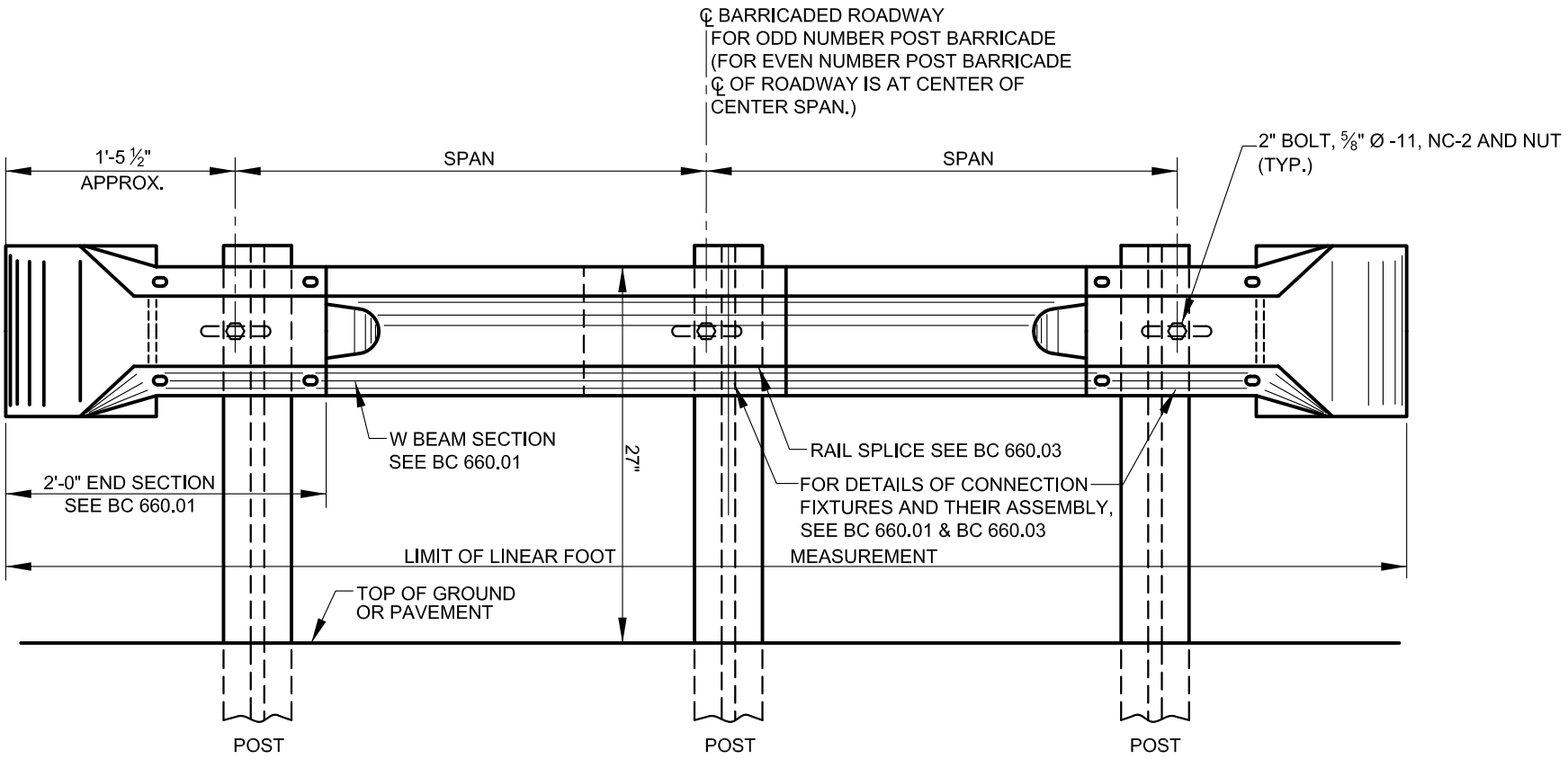

MINIMUM NUMBER OF SPANS = 2
MINIMUM NUMBER OF POSTS = 3
MAXIMUM SPAN: 12'-6"
LENGTH OF BARRICADE NOTED ON PLANS:
CENTER TO CENTER OF END POSTS.
ALL SPANS TO BE EQUAL LENGTH.
NO. OF POSTS TO BE NOTED ON PLANS.
ALL POSTS W6 x 8.5, 5'-9" LONG
SEE BC 660.02

TRAFFIC BARRIER W BEAM BARRICADE SHALL BE PAID FOR AT THE CONTRACT UNIT PRICE PER LINEAR FOOT. THE CONTRACT PRICE BID SHALL INCLUDE THE FURNISHING AND INSTALLATION OF ALL POSTS. W BEAM, POST AND SPLICE BOLTS WITH NUTS, END SECTIONS, GALVANIZING, THE COST OF ALL EXCAVATION, BACKFILLING AND TAMPING INCIDENTAL TO SETTING THE POSTS, OR THE COST OF DRIVING THE POSTS, THE COST OF THE REMOVAL OF EXISTING PAVEMENT WHERE NECESSARY, AS WELL AS THE COST OF ALL LABOR, APPROVED TOOLS AND EQUIPMENT INCIDENTAL TO FURNISHING AND INSTALLING THE BARRICADE AT LOCATIONS NOTED ON THE PLANS OR WHERE DIRECTED BY THE ENGINEER. FOR MATERIAL, SEE THE LATEST DEPARTMENT OF GENERAL SERVICES SPECIFICATIONS FOR TRAFFIC BARRIER W BEAM.

ISSUED	REVISED	REVISED
8 / 2010		

STANDARD NO.
BC 660.61

SCALE : NONE

SHEET 1 OF 1

NOTE: FOR ALL DETAILS NOT SHOWN, SEE BC 662.51-1 AND BC 662.61-1

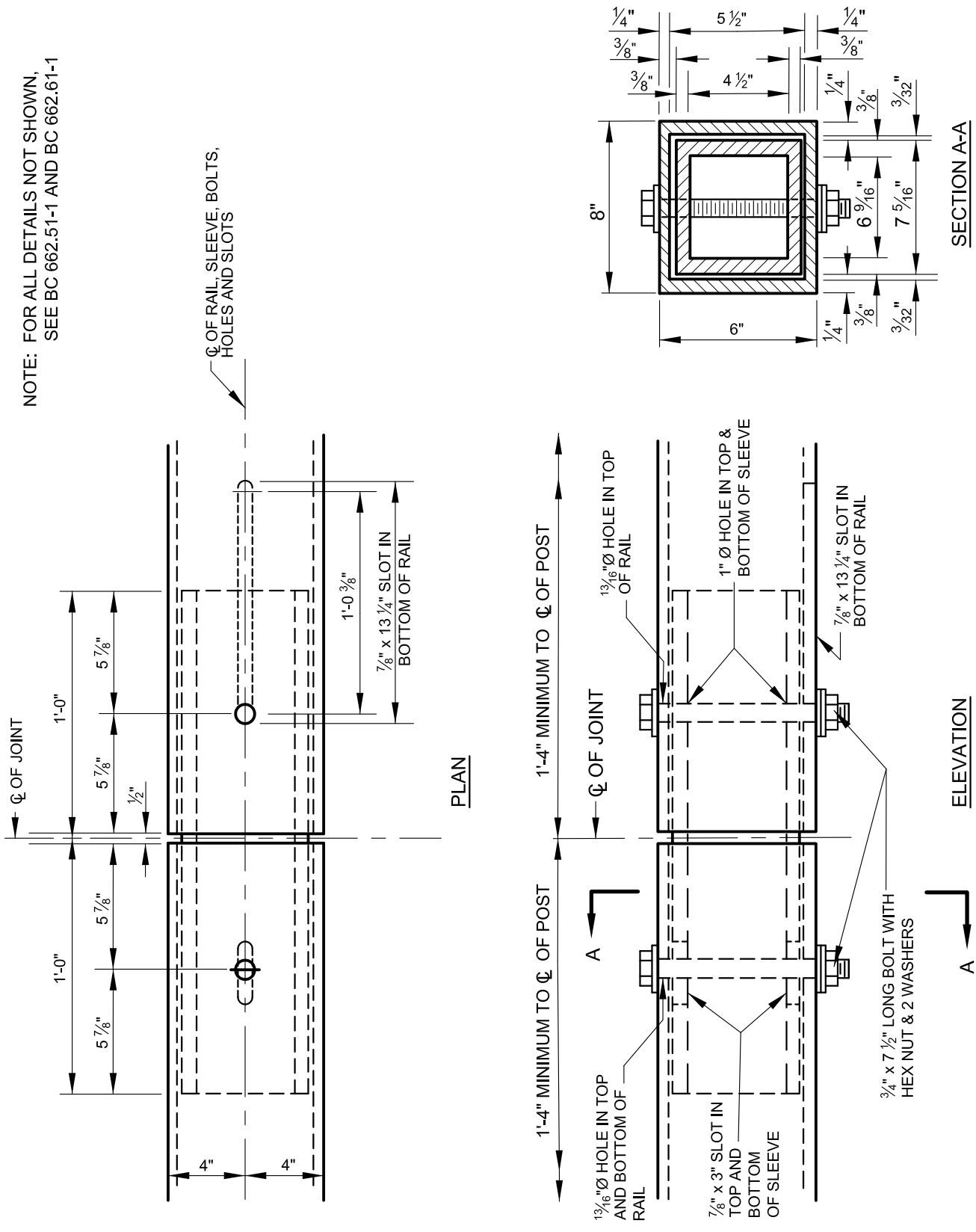

APPROVED:

Frank Murphy

DEPUTY DIRECTOR - OPERATIONS

Khalil Zaied

DIRECTOR, DEPARTMENT OF TRANSPORTATION

CITY OF BALTIMORE
DEPARTMENT OF TRANSPORTATION
TRAFFIC DIVISION

TRAFFIC BARRIER BOX BEAM MEDIAN BARRIER SECTION 4 - SPLICE DETAIL

ISSUED	REVISED	REVISED
8 / 2010		

STANDARD NO.
BC 662.01-1

SCALE : NONE

SHEET 1 OF 2

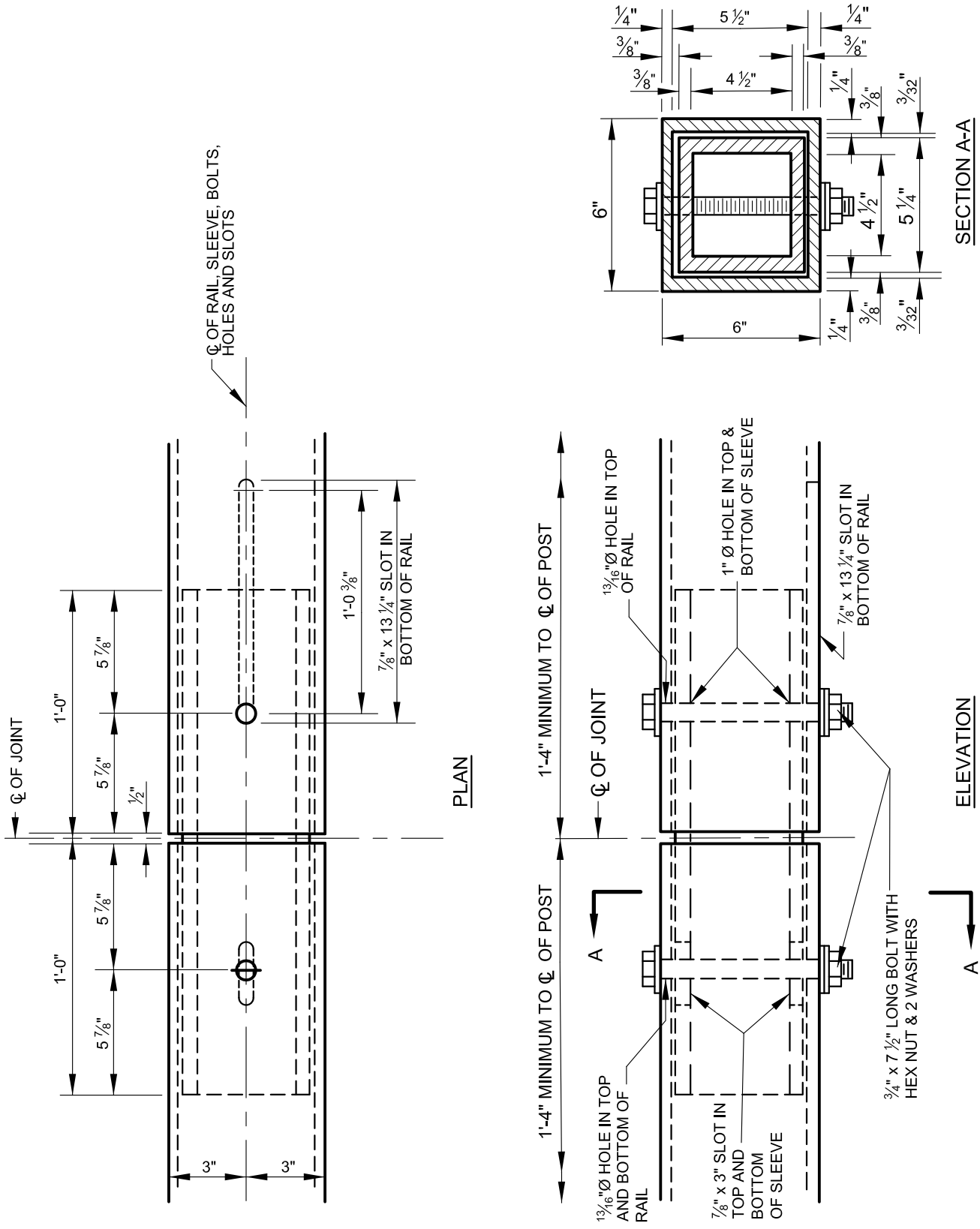

APPROVED :

Frank Murphy

DEPUTY DIRECTOR - OPERATIONS

Khalil Zaied

DIRECTOR, DEPARTMENT OF TRANSPORTATION

CITY OF BALTIMORE
DEPARTMENT OF TRANSPORTATION
TRAFFIC DIVISION

TRAFFIC BARRIER BOX BEAM SHOULDER BARRIER SECTION-SPLICE DETAIL

ISSUED	REVISED	REVISED
8 / 2010		

STANDARD NO.
BC 662.01-2

SCALE : NONE

SHEET 2 OF 2

APPROVED:

DEPUTY DIRECTOR - OPERATIONS

DIRECTOR, DEPARTMENT OF TRANSPORTATION

CITY OF BALTIMORE
DEPARTMENT OF TRANSPORTATION
TRAFFIC DIVISION

TRAFFIC BARRIER BOX BEAM SHOULDER BARRIER TYPICAL END TREATMENT

STANDARD NO.
BC 662.02-1

ISSUED	REVISED	REVISED
8 / 2010		

SCALE : NONE

SHEET 1 OF 2

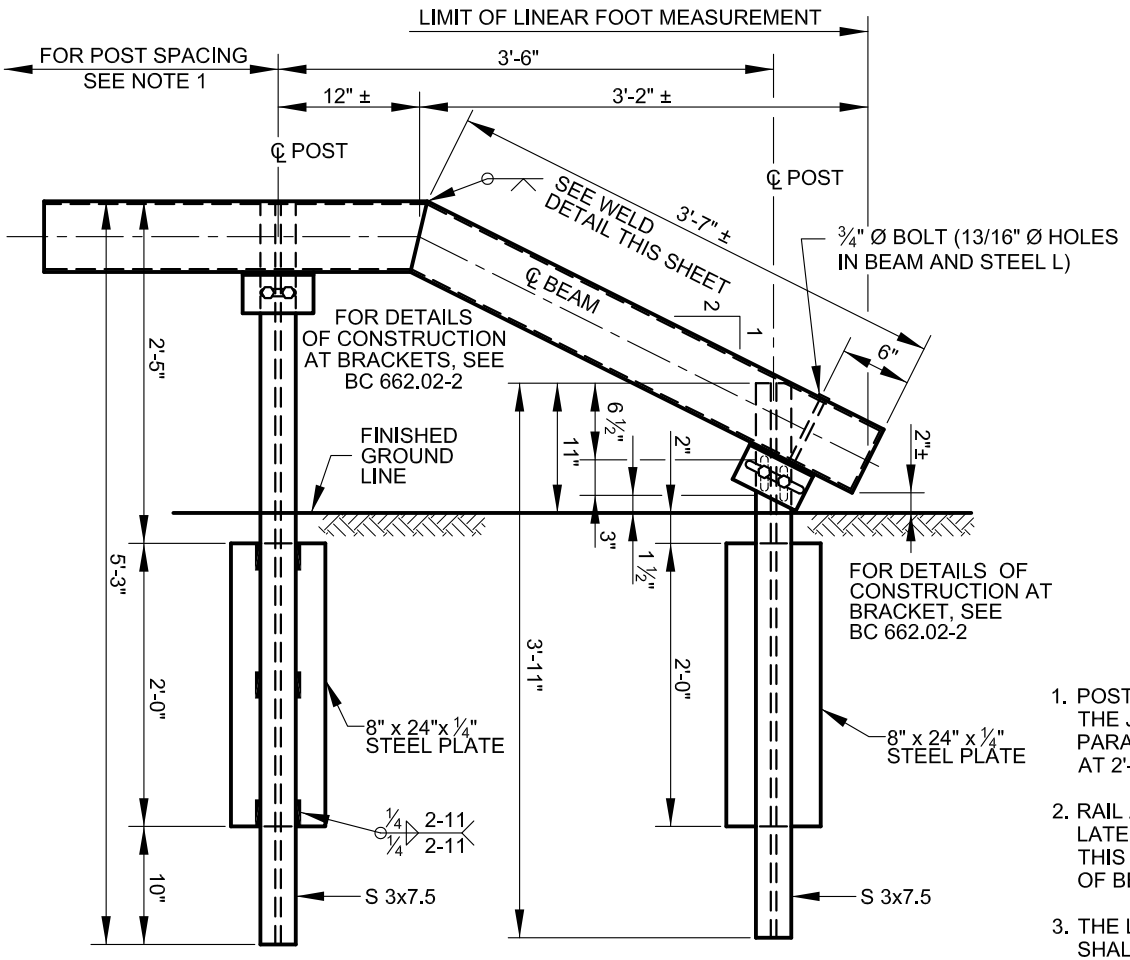

ELEVATION
SCALE: 3/4" =1'-0"

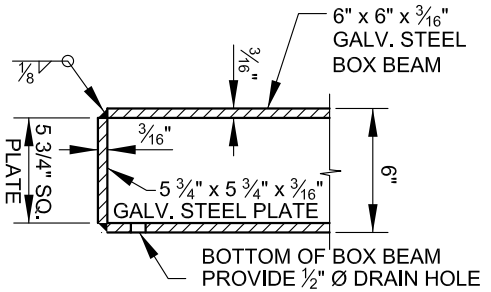

END COVER PLATE

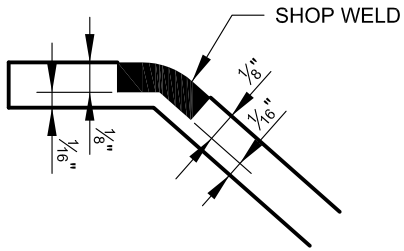

BOX BEAM SHOP WELD DETAIL

GENERAL NOTES

1. POST SPACING SHALL BE 6'-0" C/C EXCEPT IN VICINITY OF THE JUNCTION OF THE TRAFFIC BARRIER AND BRIDGE PARAPET. AT BRIDGE APPROACH USE 8 POST SPACES AT 2'-0" C/C.
2. RAIL ALIGNMENT TO BE STRAIGHT AT SPLICES, NO LATERAL BENDS PERMITTED WITHIN THE SPLICE. THIS DOES NOT PRECLUDE THE SHOP FABRICATION OF BEND SPLICES.
3. THE LINE OF BOX BEAM TRAFFIC BARRIER, WHEN COMPLETED, SHALL PRESENT A SMOOTH PLEASING GRADE LINE IN BOTH HORIZONTAL AND VERTICAL PLANES.
4. CURVED BOX BEAM TRAFFIC BARRIER FOR CURVES GREATER THAN 8°, SHALL BE SHOP WORKED TO THE REQUIRED CURVATURE.
5. BOX BEAM TRAFFIC BARRIER TO BE PROVIDED IN MINIMUM LENGTHS 18'-0" NOMINAL.
6. REINFORCED RAIL SECTION USE POST SPACING OF 3'-0" C/C AT FIXED OBJECT 4' OR LESS FROM BACK OF TRAFFIC BARRIER.

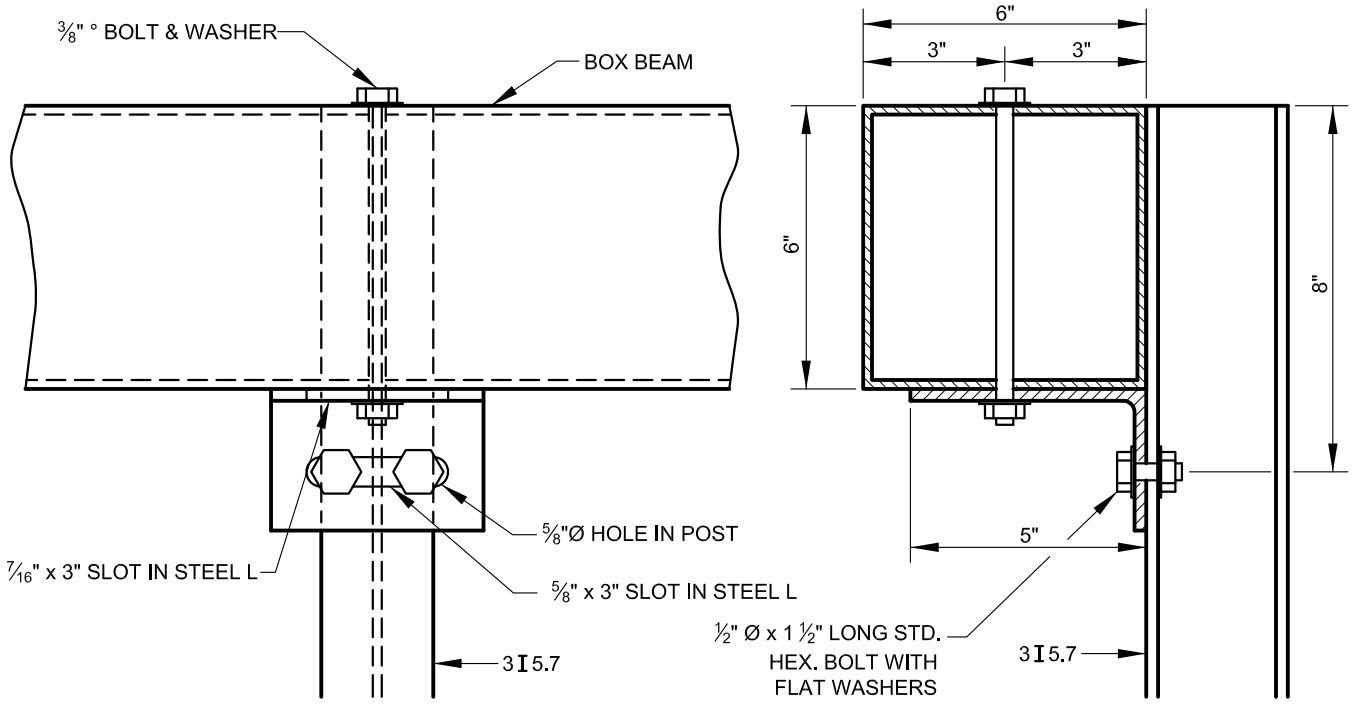

DETAILS OF SHOULDER
BARRIER POST MOUNTING

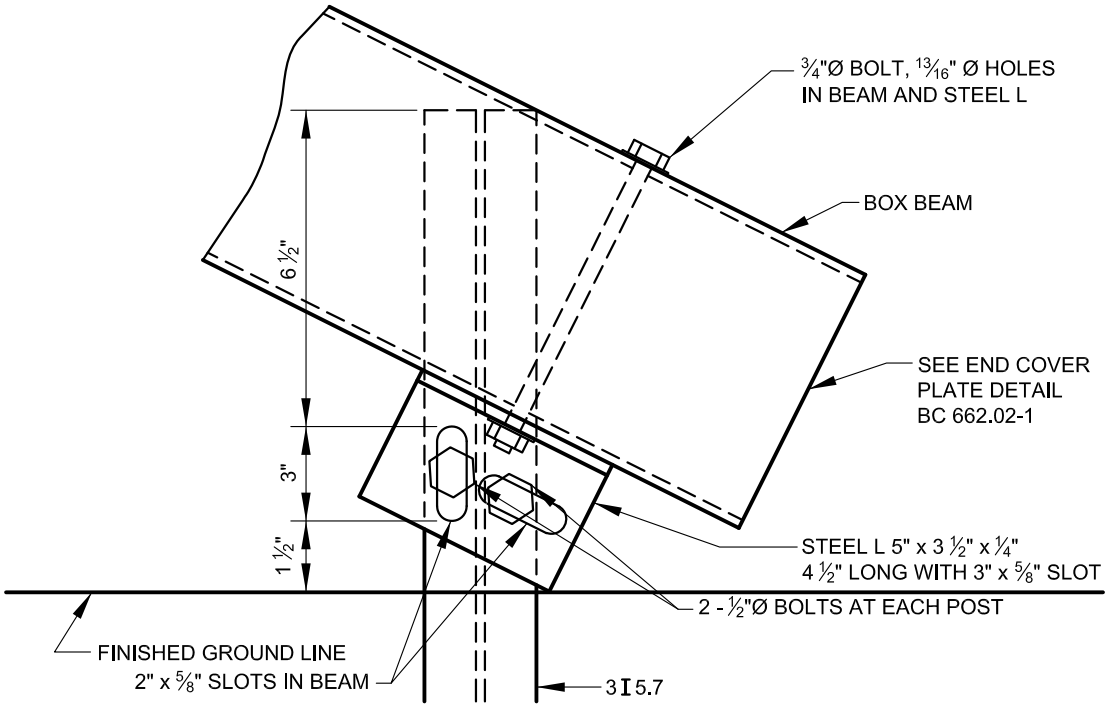

END TREATMENT DETAIL

APPROVED :

Frank Murphy

DEPUTY DIRECTOR - OPERATIONS

Khalil Zaied

DIRECTOR, DEPARTMENT OF TRANSPORTATION

CITY OF BALTIMORE
DEPARTMENT OF TRANSPORTATION
TRAFFIC DIVISION

ISSUED	REVISED	REVISED
8 / 2010		

TRAFFIC BARRIER BOX BEAM
SHOULDER BARRIER
TYPICAL END TREATMENT

STANDARD NO.
BC 662.02-2

SCALE : NONE

SHEET 2 OF 2

APPROVED:

DEPUTY DIRECTOR - OPERATIONS

DIRECTOR, DEPARTMENT OF TRANSPORTATION

CITY OF BALTIMORE
DEPARTMENT OF TRANSPORTATION
TRAFFIC DIVISION

TRAFFIC BARRIER BOX BEAM SHOULDER BARRIER LAYOUT RIGHT SHOULDER

STANDARD NO.
BC 662.11

ISSUED 8 / 2010

REVISED

REVISED

SCALE : NONE

SHEET 1 OF 1

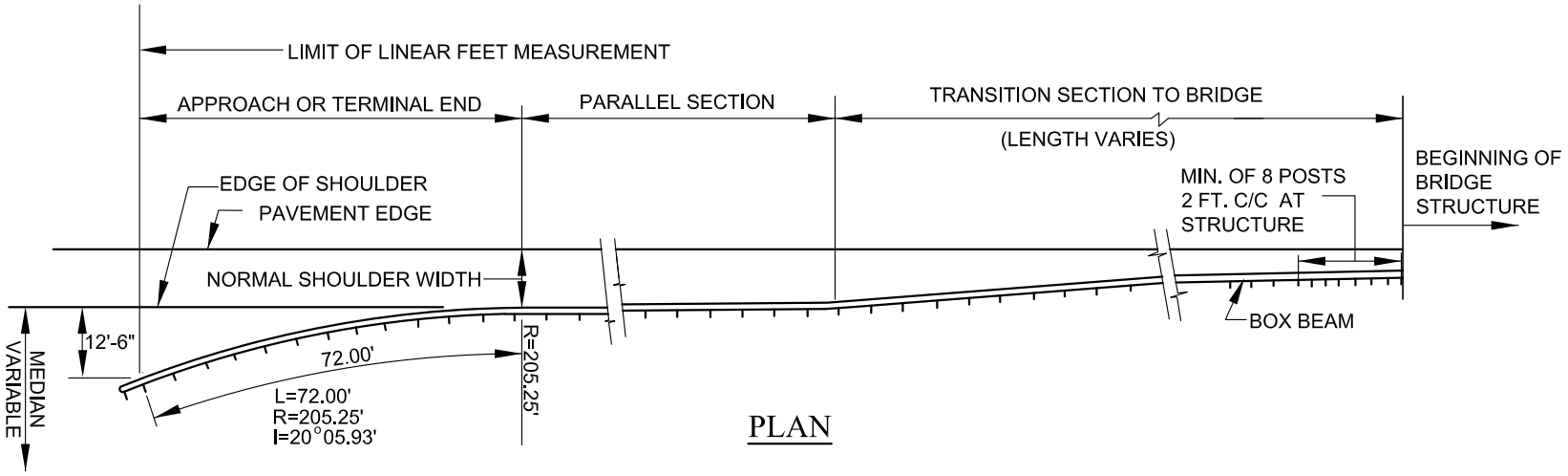

PLAN

USE ON ALL APPROACH ENDS AND TERMINAL ENDS WHENEVER THERE IS POSSIBILITY OF IMPACTING BARRIER END BY VEHICLES FROM OPPOSING TRAFFIC LANES.

NOTE: IN APPROACH OR TERMINAL END SECTIONS, POST HEIGHTS MAY AVERAGE 24" TO 30".

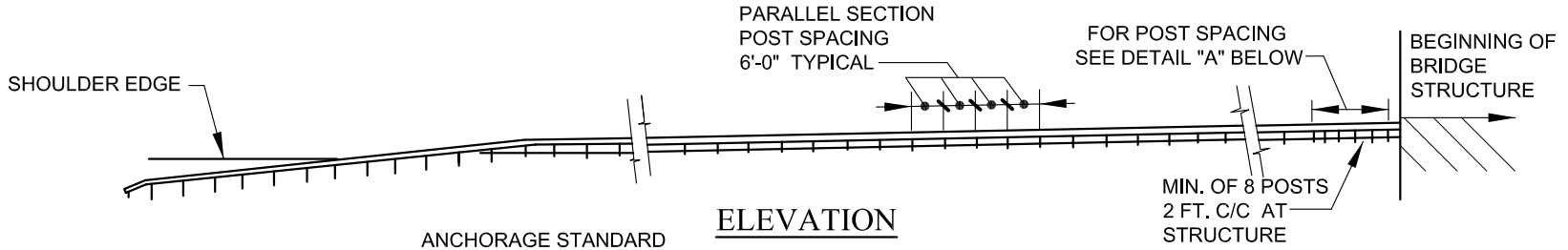

ELEVATION

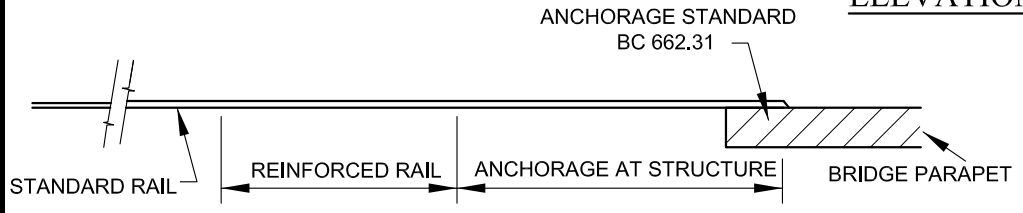

NOTE: PARALLEL SECTION OF TRAFFIC BARRIER TO BE PLACED AT EDGE OF SHOULDER UNLESS OTHERWISE CALLED FOR ON CONTRACT DRAWINGS.

POST SPACING - SEE GENERAL NOTES BC 662.02-1

DETAIL "A"

APPROVED:

DEPUTY DIRECTOR - OPERATIONS

DIRECTOR, DEPARTMENT OF TRANSPORTATION

CITY OF BALTIMORE
DEPARTMENT OF TRANSPORTATION
TRAFFIC DIVISION

TRAFFIC BARRIER BOX BEAM SHOULDER BARRIER TREATMENT AT OBSTACLES

STANDARD NO.
BC 662.12

SCALE : NONE

SHEET 1 OF 1

	ISSUED	REVISED	REVISED
	8 / 2010		

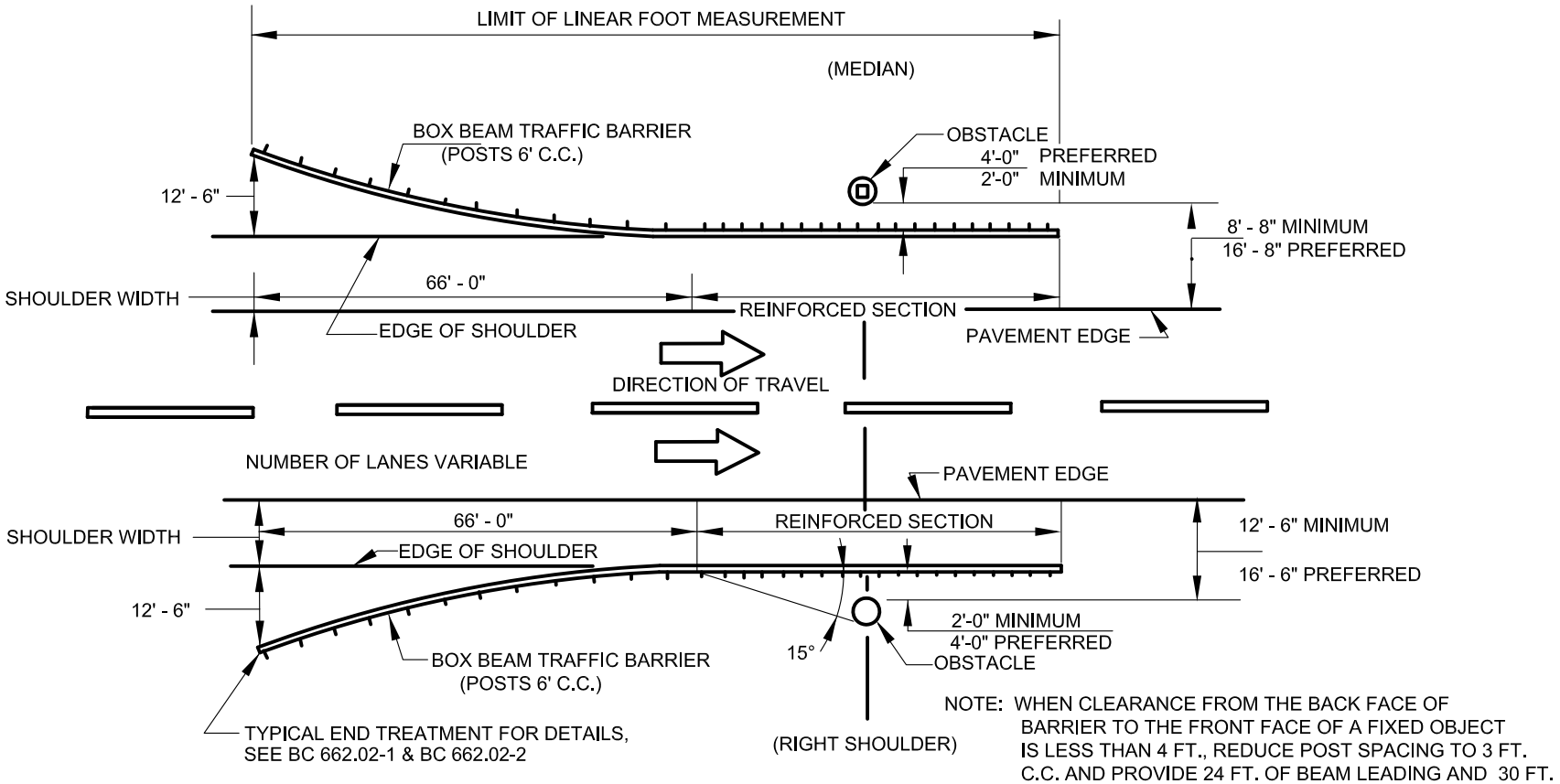

PLAN

NOTE: WHEN CLEARANCE FROM THE BACK FACE OF BARRIER TO THE FRONT FACE OF A FIXED OBJECT IS LESS THAN 4 FT., REDUCE POST SPACING TO 3 FT. C.C. AND PROVIDE 24 FT. OF BEAM LEADING AND 30 FT. LEAVING THE POINT OF THE FIXED OBJECT WITH THE 3 FT. POST SPACING. HOWEVER, THE BACK CLEARANCE MUST BE 2 FT. MIN.



ELEVATION

NOTE: PARALLEL SECTION OF TRAFFIC BARRIER TO BE PLACED AT EDGE OF SHOULDER UNLESS OTHERWISE CALLED FOR ON CONTRACT DRAWINGS.

NOTE: THIS BARRIER TREATMENT IN MEDIAN TO BE USED WHEN NO CONTINUOUS MEDIAN BARRIER IS CALLED FOR IN AREA OF OBSTACLES.

APPROVED:

DEPUTY DIRECTOR - OPERATIONS

DIRECTOR, DEPARTMENT OF TRANSPORTATION

CITY OF BALTIMORE
DEPARTMENT OF TRANSPORTATION
TRAFFIC DIVISION

TRAFFIC BARRIER BOX BEAM MEDIAN BARRIER TREATMENT AT OBSTACLES

STANDARD NO.
BC 662.13

ISSUED	REVISED	REVISED
8 / 2010		

SCALE : NONE

SHEET 1 OF 1

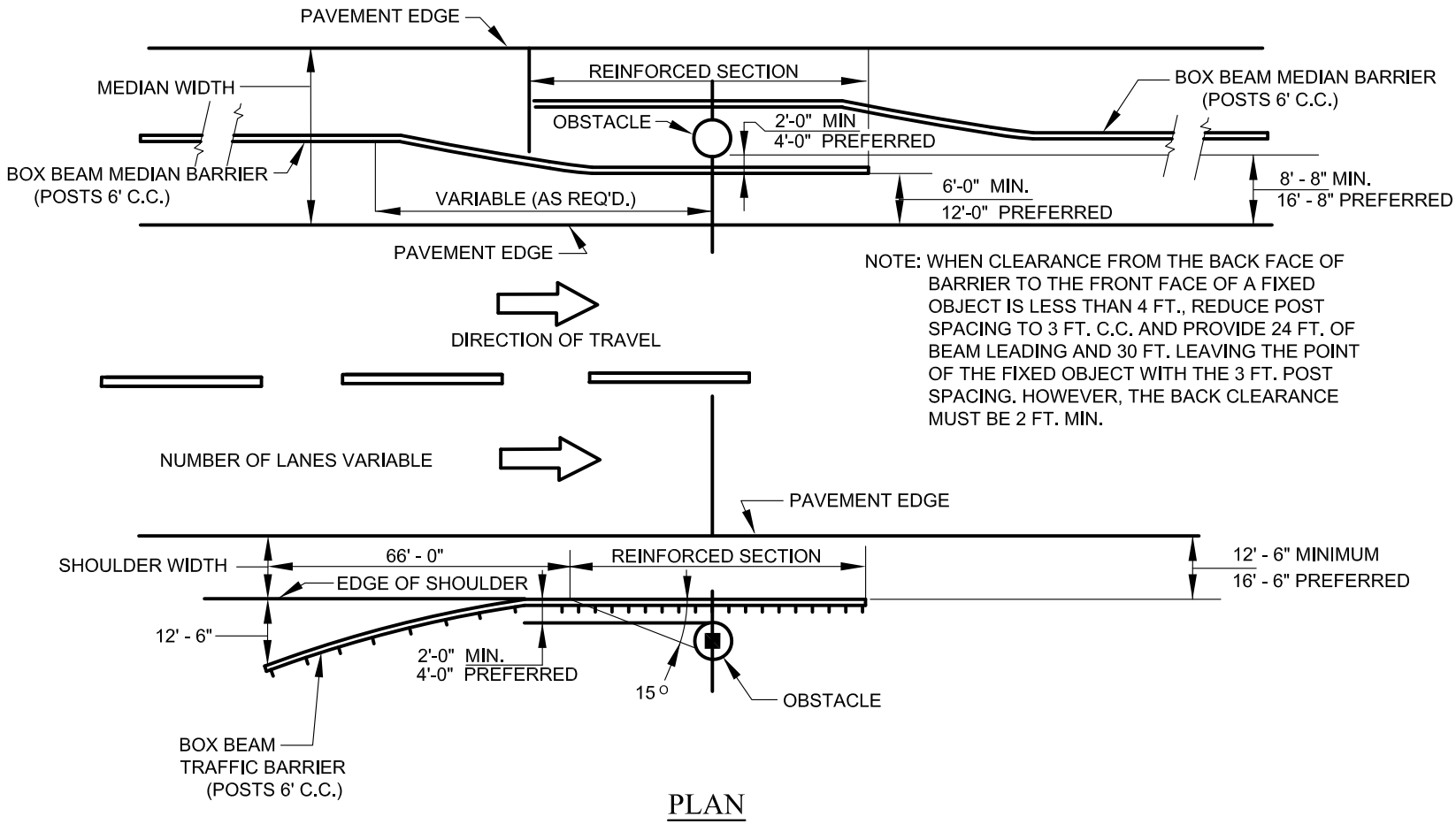

NOTE: WHEN CLEARANCE FROM THE BACK FACE OF BARRIER TO THE FRONT FACE OF A FIXED OBJECT IS LESS THAN 4 FT., REDUCE POST SPACING TO 3 FT. C.C. AND PROVIDE 24 FT. OF BEAM LEADING AND 30 FT. LEAVING THE POINT OF THE FIXED OBJECT WITH THE 3 FT. POST SPACING. HOWEVER, THE BACK CLEARANCE MUST BE 2 FT. MIN.

PLAN

NOTE: PARALLEL SECTION OF TRAFFIC BARRIER TO BE PLACED AT EDGE OF SHOULDER UNLESS OTHERWISE CALLED FOR ON THE CONTRACT DRAWINGS.

APPROVED:

DEPUTY DIRECTOR - OPERATIONS

DIRECTOR, DEPARTMENT OF TRANSPORTATION

CITY OF BALTIMORE
DEPARTMENT OF TRANSPORTATION
TRAFFIC DIVISION

TRAFFIC BARRIER BOX BEAM ANCHORAGE AT STRUCTURE

STANDARD NO.
BC 662.31

ISSUED	REVISED	REVISED
8 / 2010		

SCALE : NONE

SHEET 1 OF 1

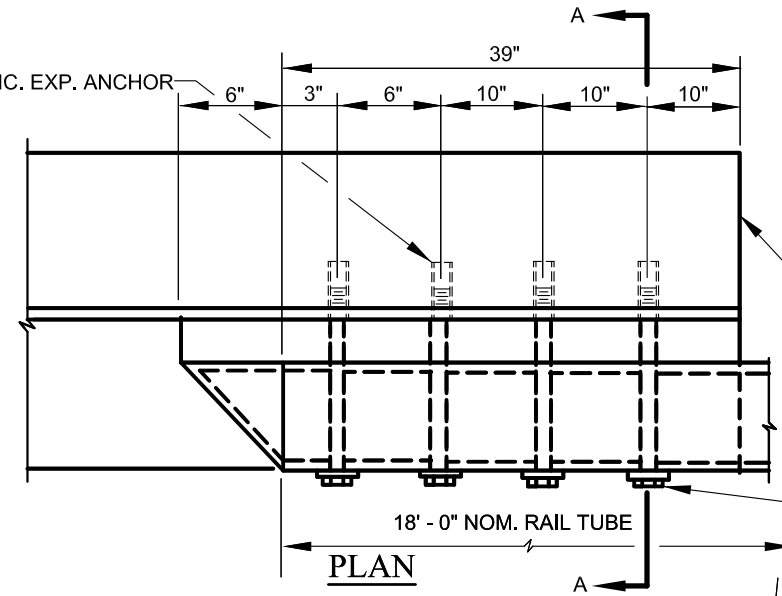

PLAN

GENERAL NOTES

ROAD CONTRACTOR SHALL FURNISH AND INSTALL 4-⅞" Ø CONCRETE EXPANSION ANCHORS OR APPROVED EQUIVALENT, 1⅛" Ø DRILLED HOLES WITH ⅞" Ø HEAVY HEX BOLTS, 8½" LONG, GALV. UNC CLASS 2A & 2B, AND STD. GALV. WASHERS.

THE ABOVE, TERMINAL END AND STEEL FILLER STRIP TO BE INCLUDED IN THE MEASUREMENT AND PAYMENT OF THE CONTRACT UNIT PRICE PER LINEAR FOOT FOR "TRAFFIC BARRIER BOX BEAM".

LIMIT OF "EACH" MEASUREMENT OF PAYMENT
TRAFFIC BARRIER BOX BEAM - ANCHORAGE AT STRUCTURES

REINFORCED RAIL SECTION, BC 662.11

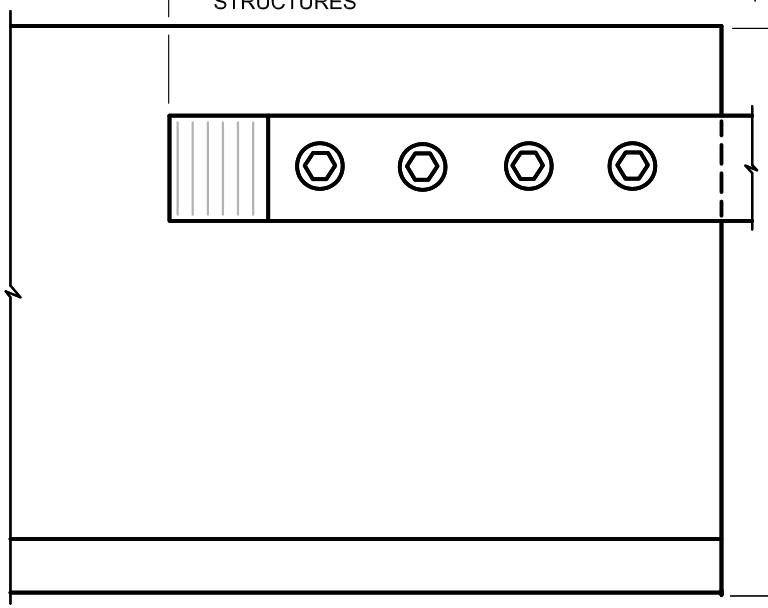

ELEVATION

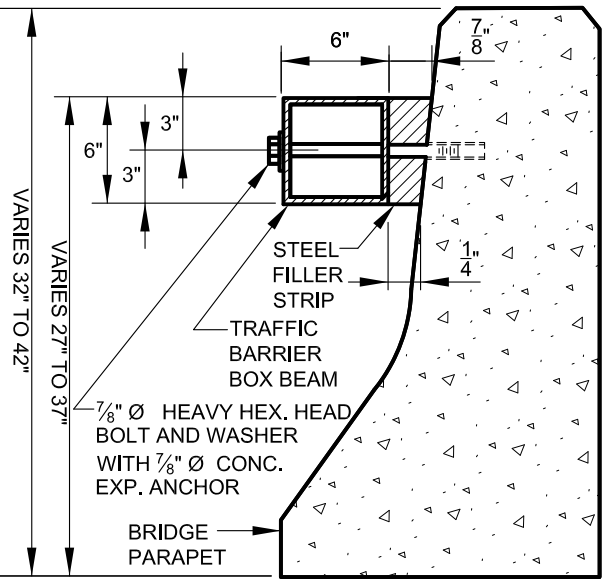

SECTION A-A

APPROVED:

DEPUTY DIRECTOR - OPERATIONS

DIRECTOR, DEPARTMENT OF TRANSPORTATION

CITY OF BALTIMORE
DEPARTMENT OF TRANSPORTATION
TRAFFIC DIVISION

TRAFFIC BARRIER BOX BEAM MEDIAN BARRIER - DETAILS FOR RAISED MEDIANS

STANDARD NO.
BC 662.51-1

ISSUED	REVISED	REVISED
8 / 2010		

SCALE : NONE

SHEET 1 OF 2

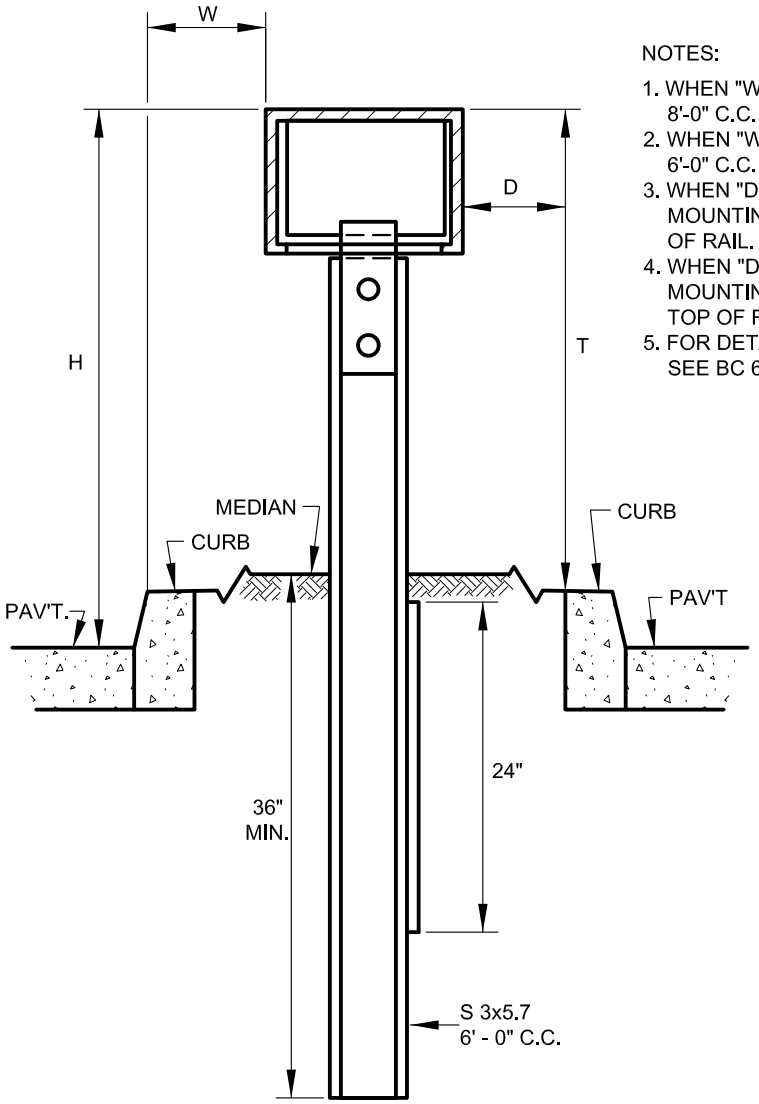

DETAIL SECTION FOR RAISED MEDIAN

NOTES:

1. WHEN "W" IS 6" OR LESS, SPACE POSTS 8'-0" C.C.
2. WHEN "W" IS GREATER THAN 6", SPACE POSTS 6'-0" C.C.
3. WHEN "D" IS LESS THAN 36", MEASURE 27" MOUNTING HEIGHT "H" FROM PAV'T TO TOP OF RAIL.
4. WHEN "D" IS 36" OR GREATER MEASURE 27" MOUNTING HEIGHT "T" FROM BACK OF CURB TO TOP OF RAIL.
5. FOR DETAILS NOT SHOWN ON THIS SHEET SEE BC 662.51-2 & BC-662.61-1.

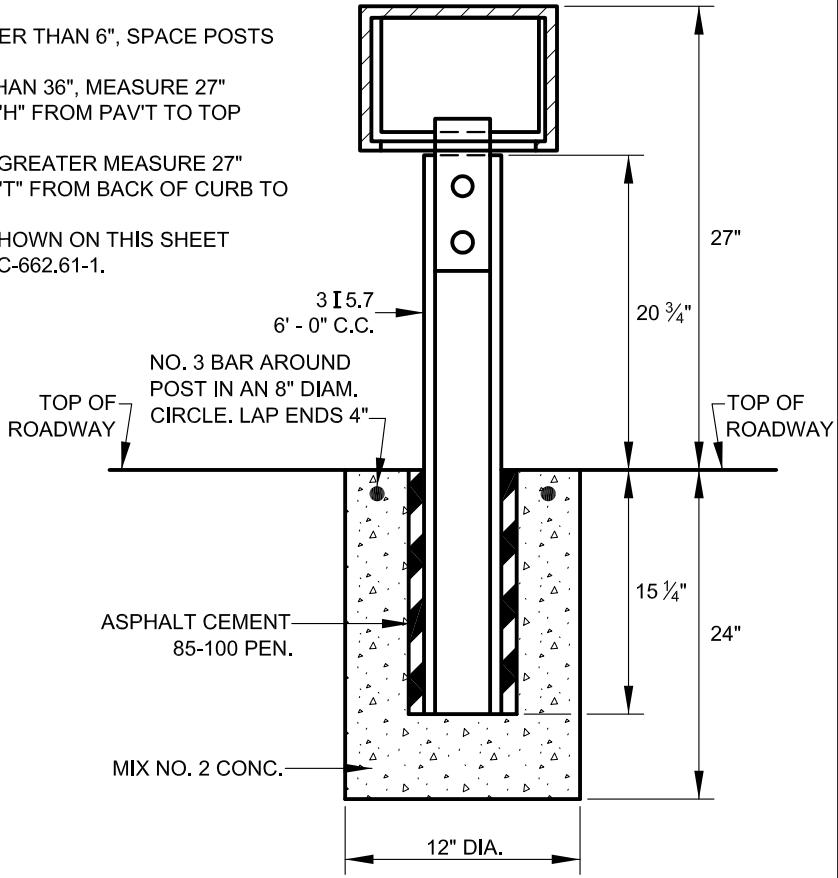

DETAIL OF ALTERNATE POST ANCHOR FOR PAVED MEDIANS

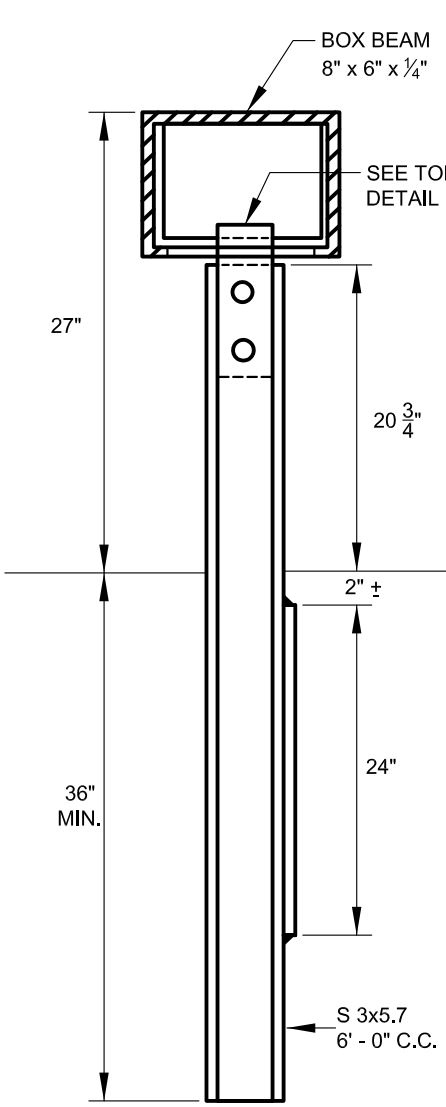

SECTION A-A

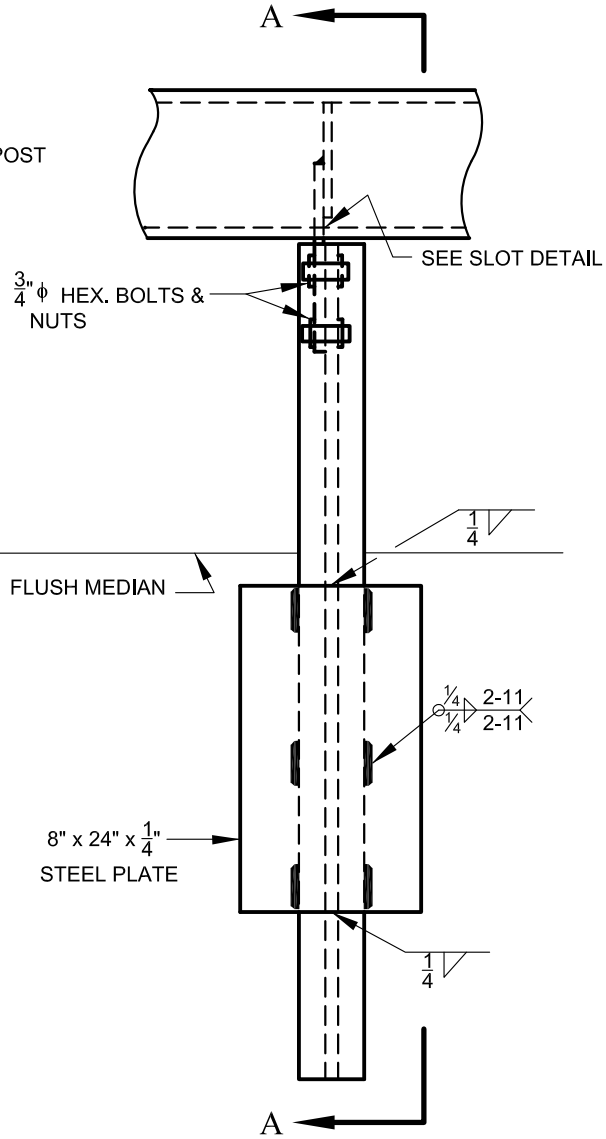

ELEVATION

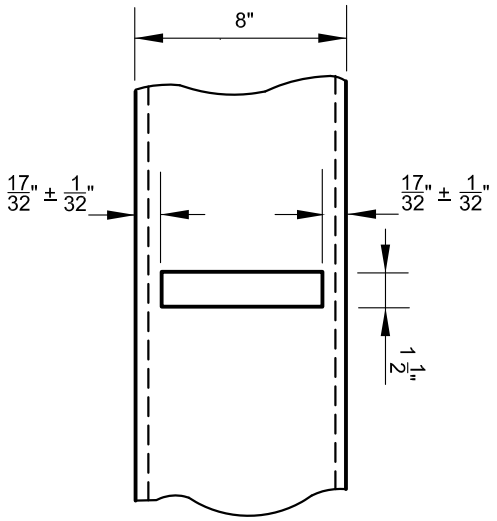

SLOT DETAIL
(BOTTOM VIEW OF RAIL)

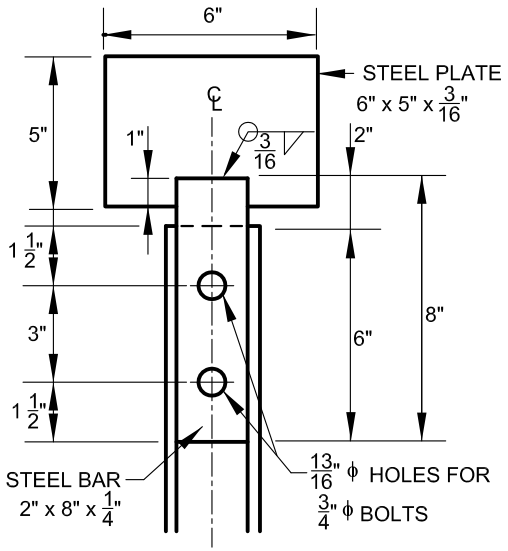

TOP OF POST DETAIL

CITY OF BALTIMORE
DEPARTMENT OF TRANSPORTATION
TRAFFIC DIVISION

APPROVED:
DEPUTY DIRECTOR - OPERATIONS
DIRECTOR, DEPARTMENT OF TRANSPORTATION

TRAFFIC BARRIER BOX BEAM MEDIAN BARRIER - DETAILS FOR FLUSH MEDIANS

STANDARD NO.
BC 662.51-2

SCALE: NONE

SHEET 2 OF 2

ISSUED	REVISED	REVISED
8 / 2010		

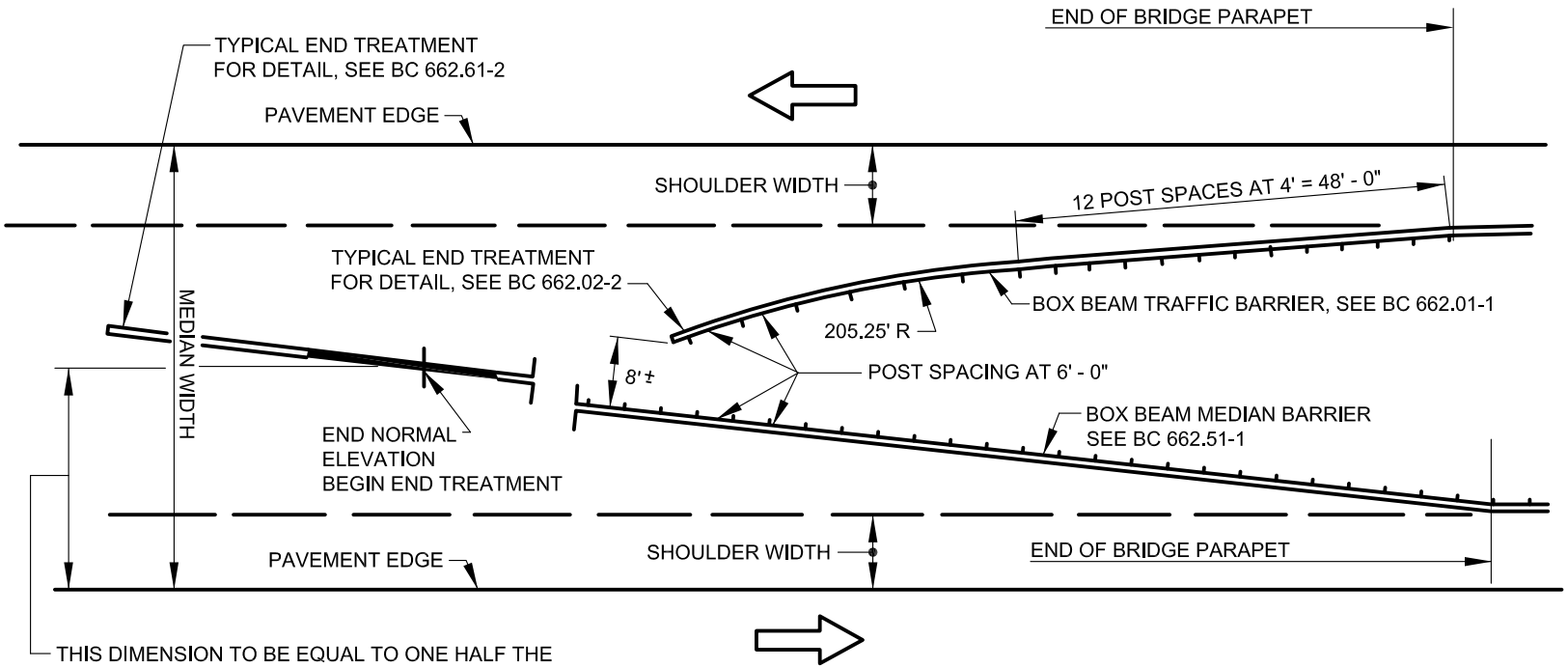

PLAN OF MEDIAN

GENERAL NOTES

1. THIS LAYOUT IS FOR BRIDGE APPROACHES WHERE TRAFFIC BARRIER AND MEDIAN BARRIERS ARE ONLY WARRANTED AT THE BRIDGE.
2. TRAFFIC DIRECTION IS INDICATED BY

NOTE:
FOR ATTACHMENT OF RAIL TO BRIDGE STRUCTURE AT TRAFFIC APPROACH END, SEE BC 662.11.

APPROVED:
DEPUTY DIRECTOR - OPERATIONS
DIRECTOR, DEPARTMENT OF TRANSPORTATION

CITY OF BALTIMORE
DEPARTMENT OF TRANSPORTATION
TRAFFIC DIVISION

TRAFFIC BARRIER BOX BEAM MEDIAN BARRIER - TYP. LAYOUT AT BRIDGES

ISSUED	REVISED	REVISED
8 / 2010		

STANDARD NO. BC 662.61-1

SCALE : NONE

SHEET 1 OF 2

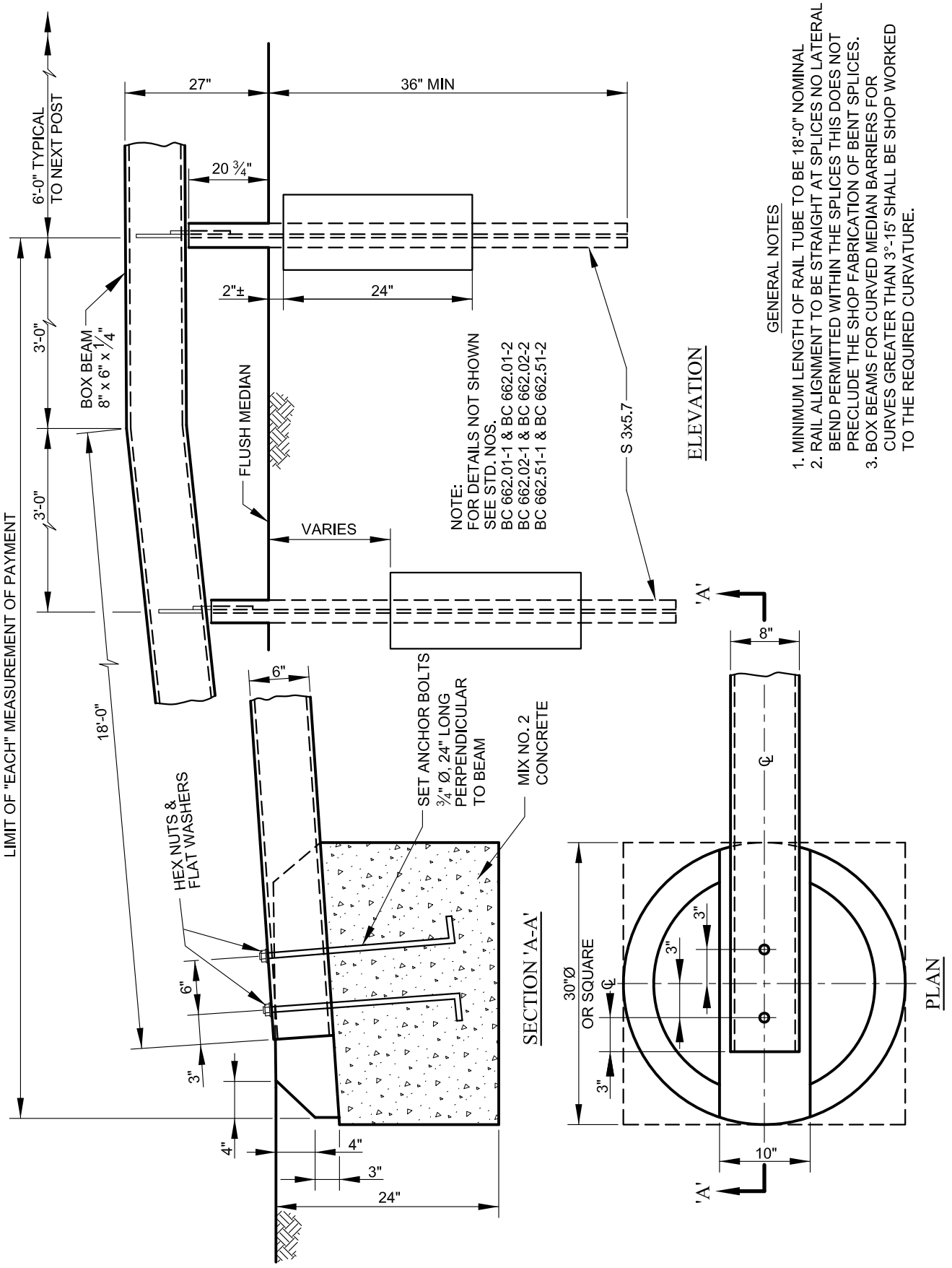

APPROVED :

Frank Murphy

DEPUTY DIRECTOR - OPERATIONS

Khalil Zaied

DIRECTOR, DEPARTMENT OF TRANSPORTATION

CITY OF BALTIMORE
DEPARTMENT OF TRANSPORTATION
TRAFFIC DIVISION

TRAFFIC BARRIER BOX BEAM MEDIAN BARRIER TYPICAL END TREATMENT

ISSUED	REVISED	REVISED
8 / 2010		

STANDARD NO.
BC 662.61-2

SCALE : NONE

SHEET 2 OF 2

APPROVED:

DIVISION CHIEF, TRANSPORTATION ENGINEERING AND CONSTRUCTION

DIRECTOR, DEPARTMENT OF TRANSPORTATION

CITY OF BALTIMORE
DEPARTMENT OF TRANSPORTATION
TRANSPORTATION ENGINEERING AND CONSTRUCTION

CHAIN-LINK FENCE WITH BRACE RAILS AND FENCE TREATMENT AT EXPANSION JOINT

STANDARD NO.
BC 690.01-1

SCALE : NONE

SHEET 1 OF 6

ISSUED	REVISED	REVISED
8 / 2010		

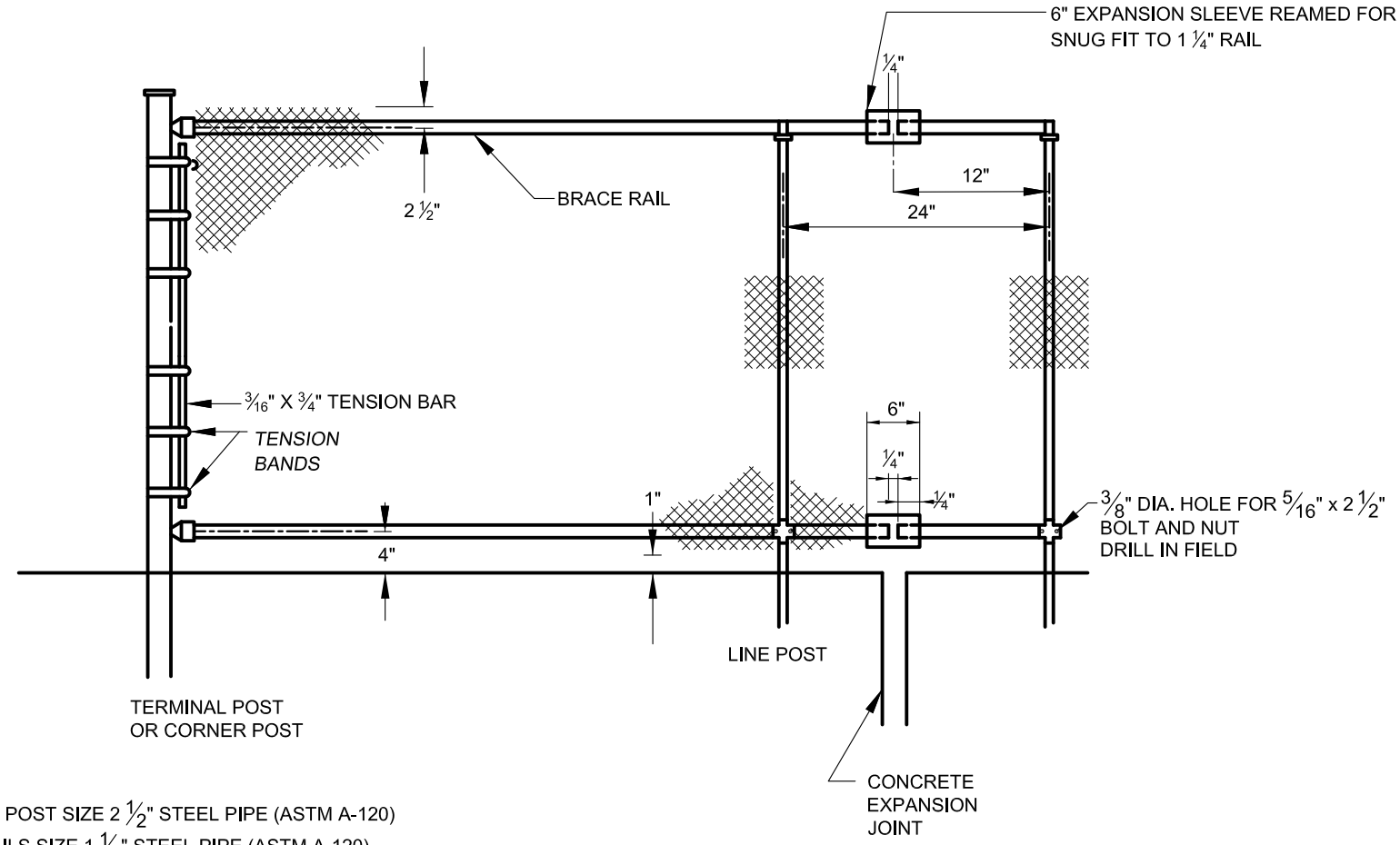

NOTES

1. TERMINAL POST SIZE 2 ½" STEEL PIPE (ASTM A-120)
2. BRACE RAILS SIZE 1 ¼" STEEL PIPE (ASTM A-120)
3. LINE POST SIZE 1 ½" STEEL PIPE (ASTM A-120) OR 2 ½" X 1 7/8" STEEL H BEAM @ 4.1 # PER FT.
4. OTHER MATERIALS OR SECTIONS MAY BE SPECIFIED BY THE DESIGNER IF EQUAL STRENGTH CHARACTERISTICS ARE MAINTAINED.
5. WIRE TIES TO BE 13 GA. @ 1'-0" O.C. ON LINE POSTS AND @ 1'-6" O.C. ON RAILS.
6. FOR POST MOUNTING DETAILS SEE BC 690.01-5 AND BC 690.01-6
7. FOR BARBED WIRE INSTALLATION SEE BC 690.01-1 AND BC 690.01-2
8. TENSION BANDS 7/8" X 12 GA.; 12" O.C. (ASTM 153)

APPROVED:

DIVISION CHIEF, TRANSPORTATION ENGINEERING AND CONSTRUCTION

DIRECTOR, DEPARTMENT OF TRANSPORTATION

CITY OF BALTIMORE
DEPARTMENT OF TRANSPORTATION
TRANSPORTATION ENGINEERING AND CONSTRUCTION

CHAIN-LINK FENCE WITH TENSION WIRE TOP AND BOTTOM

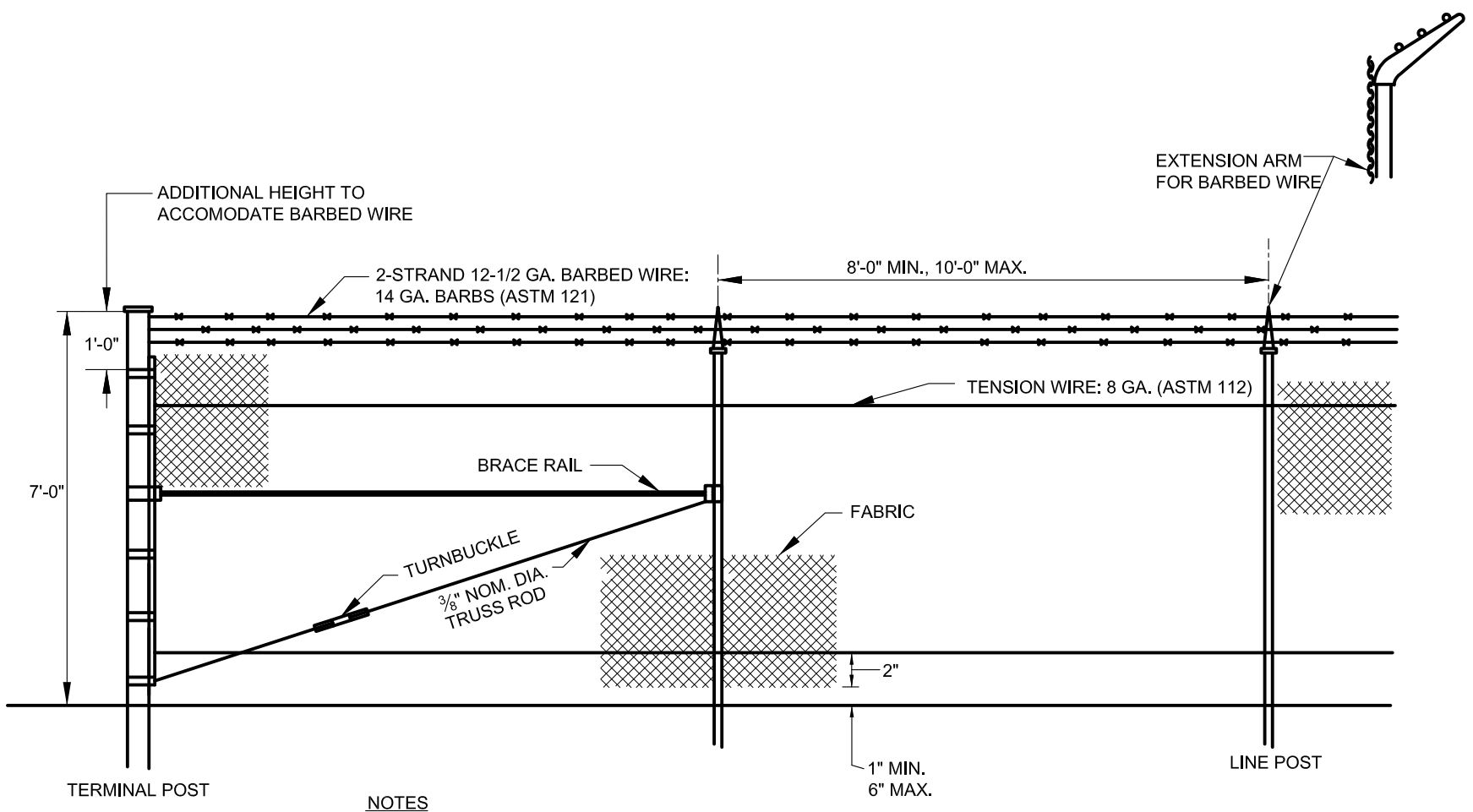

NOTES

1. TERMINAL POST SIZE 2 1/2" STEEL PIPE (ASTM A-120)
2. BRACE RAILS SIZE 1 1/4" STEEL PIPE (ASTM A-120)
3. LINE POST SIZE 1 1/2" STEEL PIPE (ASTM A-120) OR
   2 1/2" X 1 7/8" H BEAM @ 4.1 # PER FT.
4. OTHER MATERIALS OR SECTIONS MAY BE SPECIFIED BY THE DESIGNER IF EQUAL STRENGTH CHARACTERISTICS ARE MAINTAINED.
5. WIRE TIES TO BE 13 GA. @ 10" O.C. ON LINE POSTS AND 1'-6" O.C. ON RAILS.
6. FOR POST MOUNTING DETAILS SEE BC 690.01-5 AND BC 690.01-6.

ISSUED	REVISED	REVISED
8 / 2010		

STANDARD NO.
BC 690.01-2

SCALE : NONE

APPROVED:

DIVISION CHIEF, TRANSPORTATION ENGINEERING AND CONSTRUCTION

DIRECTOR, DEPARTMENT OF TRANSPORTATION

CITY OF BALTIMORE
DEPARTMENT OF TRANSPORTATION
TRANSPORTATION ENGINEERING AND CONSTRUCTION

FENCE GATE DETAIL FOR CHAIN-LINK FENCE

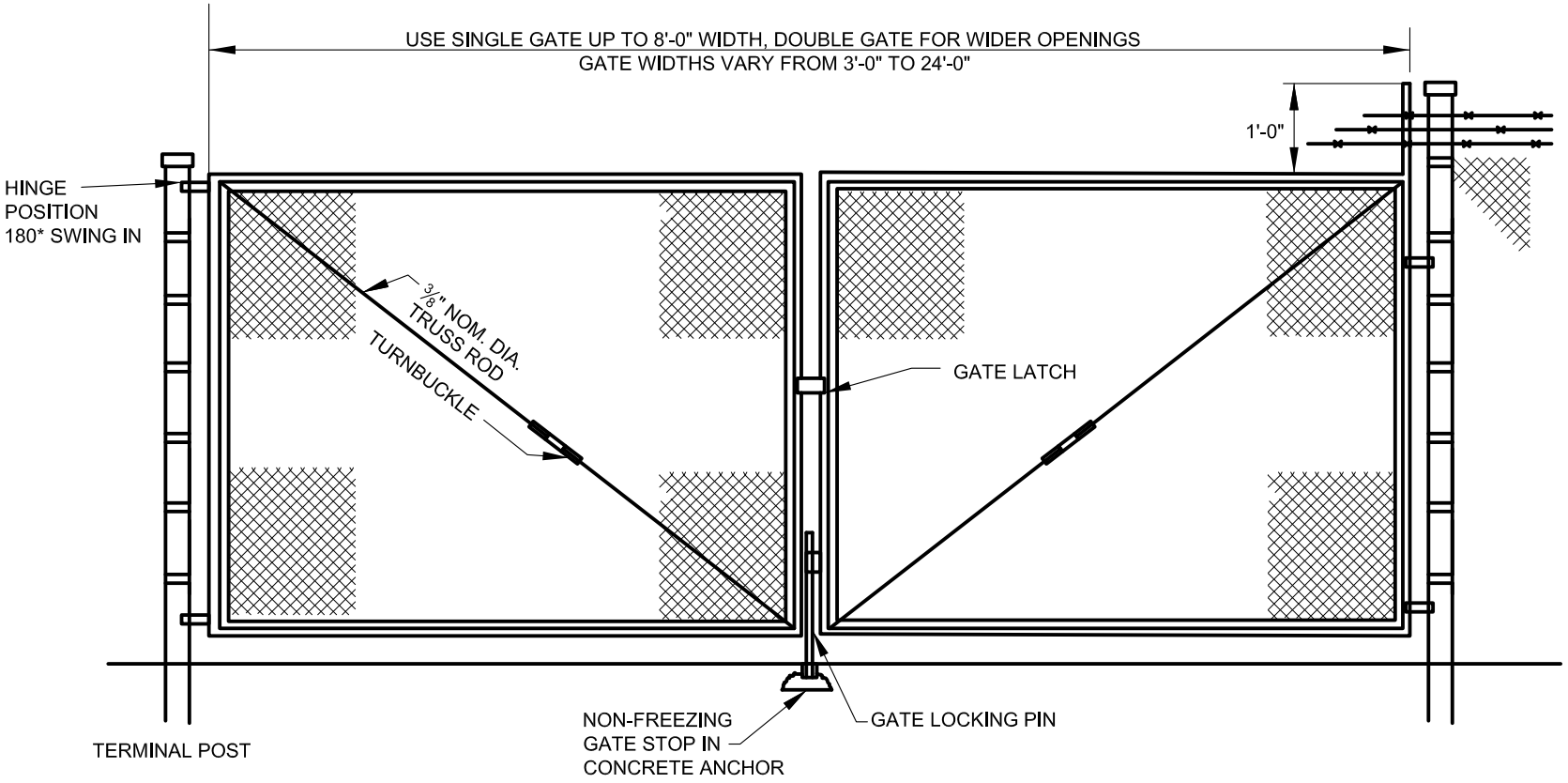

NOTES

1. FRAME MEMBERS: SIZE 1-1/4" STEEL PIPE (ASTM A-120) FOR GATES 3' IN WIDTH, ALL OTHER WIDTHS USE SIZE 1-1/2" STEEL PIPE (ASTM-120)
2. FOR POST MOUNTING SEE STD. PLATE BC 690.01-5.
3. OTHER MATERIALS OR SECTIONS MAY BE SPECIFIED BY DESIGNER IF EQUAL STRENGTH CHARACTERISTICS ARE MAINTAINED.
4. WHEN FENCE IS BARBED-WIRED, USE SAME ON TOP OF GATES.
5. FOR POST MOUNTING DETAILS, SEE BC 690.01-2

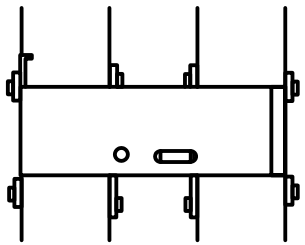

GATE LATCH DETAIL

ISSUED	REVISED	REVISED
8 / 2010		

STANDARD NO. BC 690.01-3

SCALE : NONE

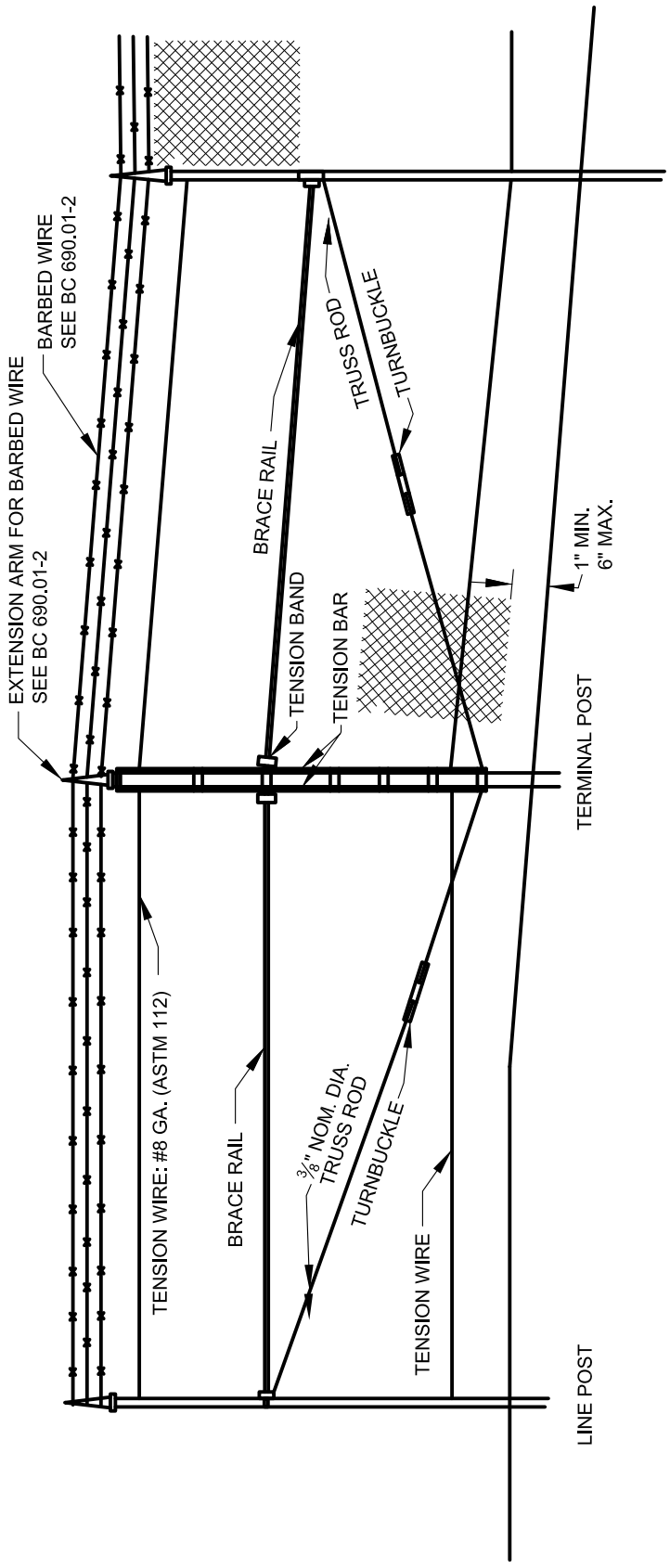

NOTES

1. FOR POST MOUNTING DETAILS SEE BC 690.01-5 AND BC 690.01-6.
2. FOR POST AND RAIL DETAILS SEE BC 690.01-1.
3. FOR TENSION BAR DETAILS SEE BC 690.01-1.

APPROVED:

DIVISION CHIEF, TRANSPORTATION ENGINEERING AND CONSTRUCTION

DIRECTOR, DEPARTMENT OF TRANSPORTATION

CITY OF BALTIMORE
DEPARTMENT OF TRANSPORTATION
TRANSPORTATION ENGINEERING AND CONSTRUCTION

CHAIN-LINK FENCE TREATMENT AT VERTICAL BREAK IN ALIGNMENT

ISSUED	REVISED	REVISED
8 / 2010		

STANDARD NO.
BC 690.01-4

SCALE : NONE

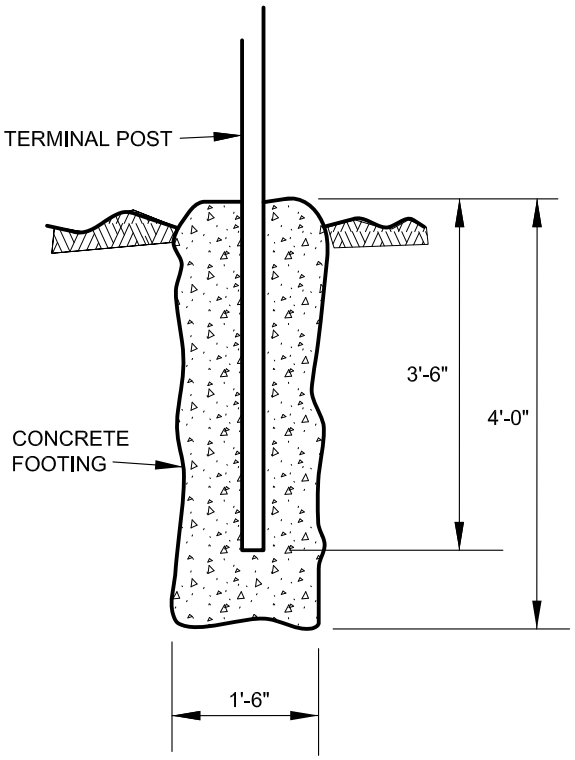

TERMINAL POST MOUNTING

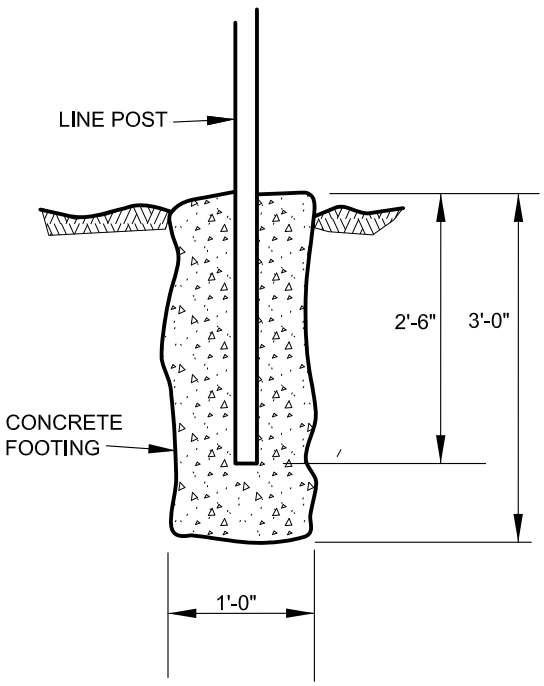

LINE POST MOUNTING

NOTE: WHERE SLEEVE IS INSTALLED WITHOUT POST, SLEEVE WILL BE THREADED AND CAPPED.

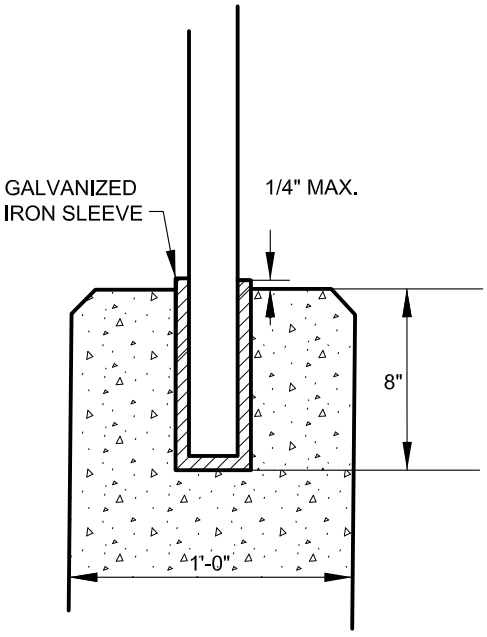

POST MOUNTING TOP OF WALL

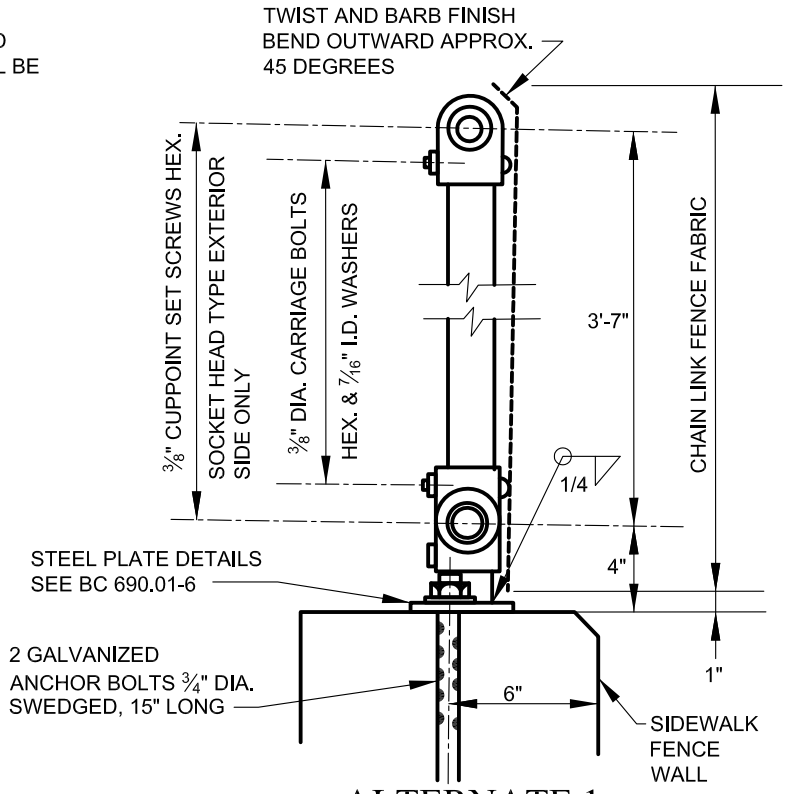

ALTERNATE 1
POST MOUNTING TOP OF WALL

APPROVED:

DIVISION CHIEF, TRANSPORTATION ENGINEERING AND CONSTRUCTION

DIRECTOR, DEPARTMENT OF TRANSPORTATION

CITY OF BALTIMORE
DEPARTMENT OF TRANSPORTATION
TRANSPORTATION ENGINEERING AND CONSTRUCTION

ISSUED	REVISED	REVISED
8 / 2010		

POST MOUNTING DETAILS
CHAIN-LINK FENCE

STANDARD NO.
BC 690.01-5

SCALE : NONE

SHEET 5 OF 6

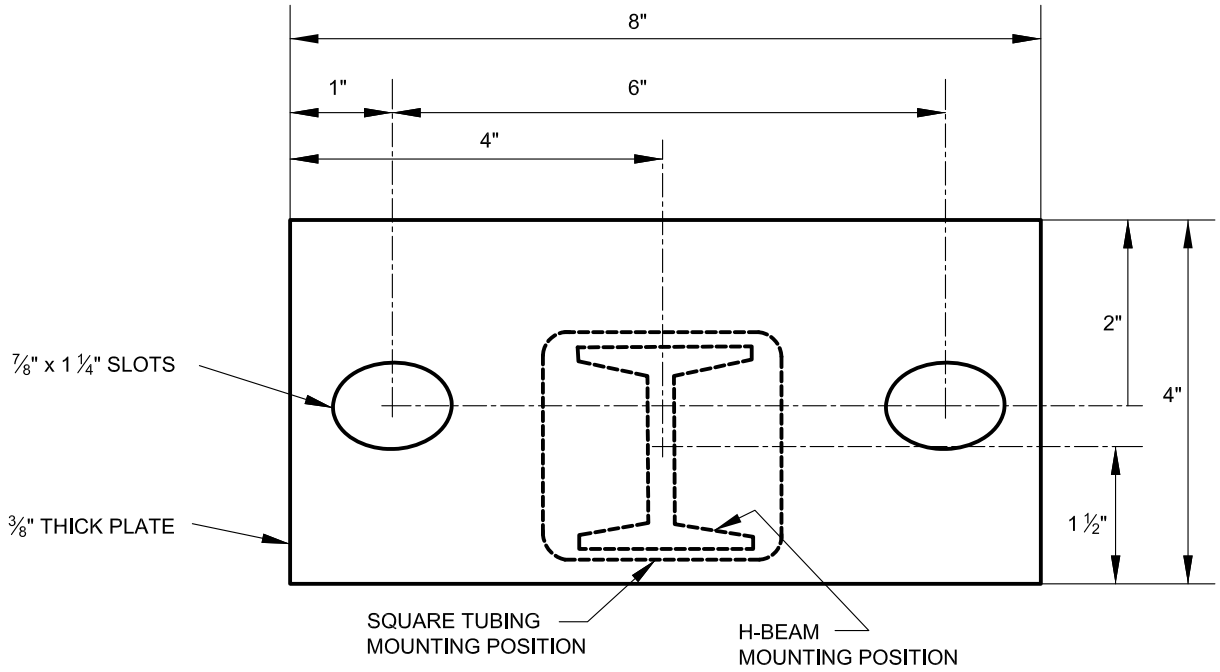

PLATE DETAIL

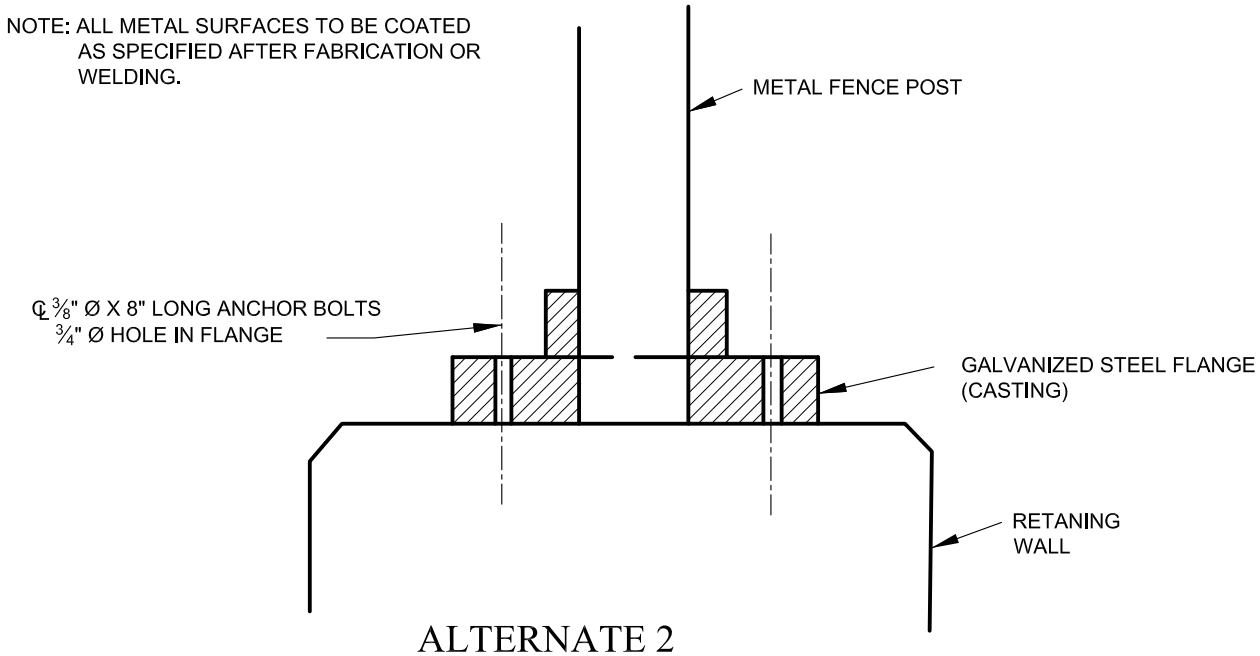

ALTERNATE 2
POST MOUNTING IN TOP OF WALL

APPROVED:

DIVISION CHIEF, TRANSPORTATION ENGINEERING AND CONSTRUCTION

DIRECTOR, DEPARTMENT OF TRANSPORTATION

CITY OF BALTIMORE
DEPARTMENT OF TRANSPORTATION
TRANSPORTATION ENGINEERING AND CONSTRUCTION

POST MOUNTING DETAILS
CHAIN-LINK FENCE

ISSUED	REVISED	REVISED
8 / 2010		

STANDARD NO.
BC 690.01-6

SCALE : NONE

SHEET 6 OF 6

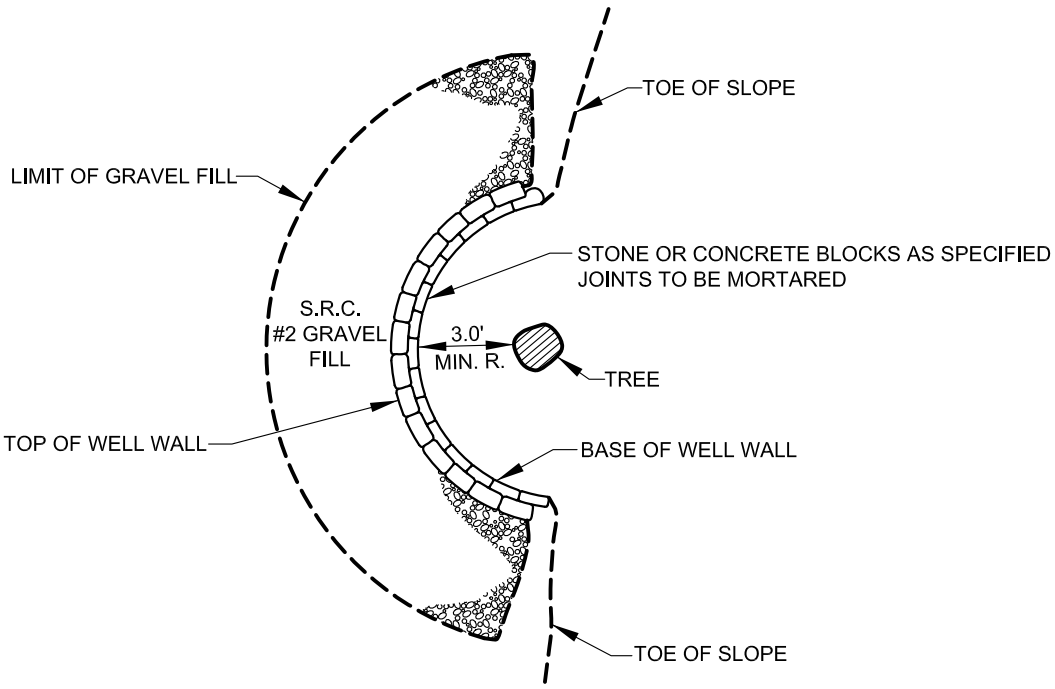

PLAN

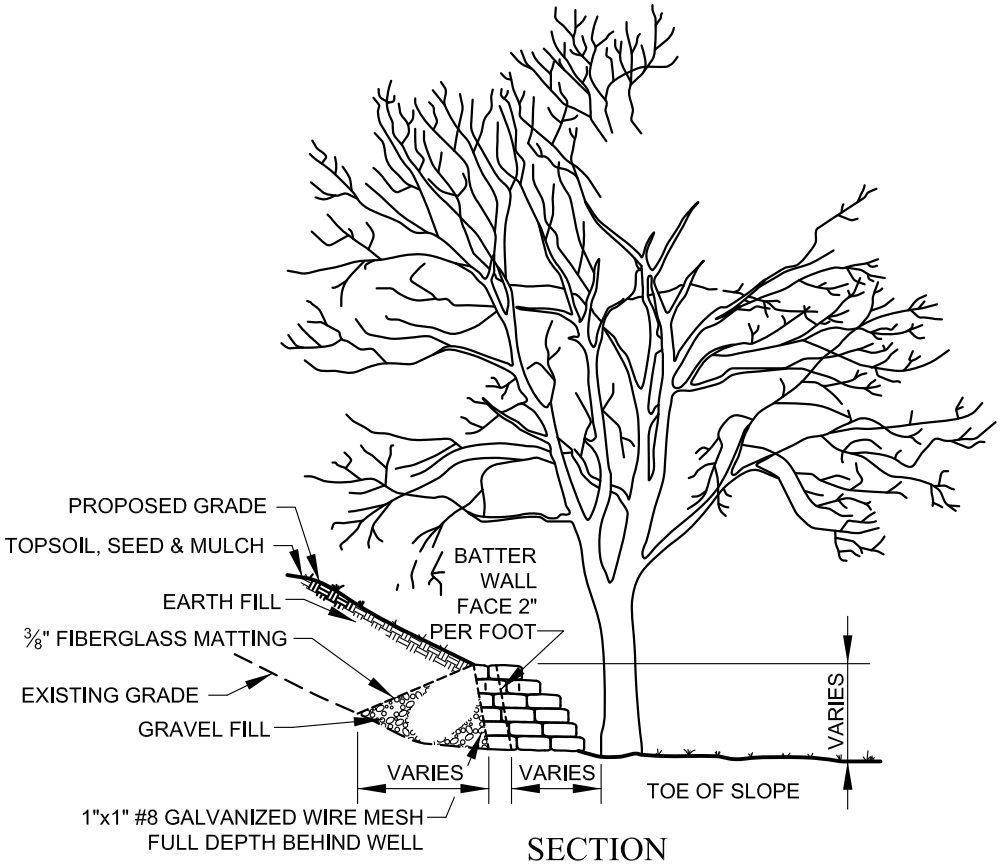

SECTION

APPROVED:

DIVISION CHIEF, TRANSPORTATION ENGINEERING AND CONSTRUCTION

DIRECTOR, DEPARTMENT OF TRANSPORTATION

CITY OF BALTIMORE
DEPARTMENT OF TRANSPORTATION
TRANSPORTATION ENGINEERING AND CONSTRUCTION

ISSUED	REVISED	REVISED
8 / 2010		

TREE WELL

STANDARD NO.
BC 701.01

SCALE : NONE

SHEET 1 OF 1

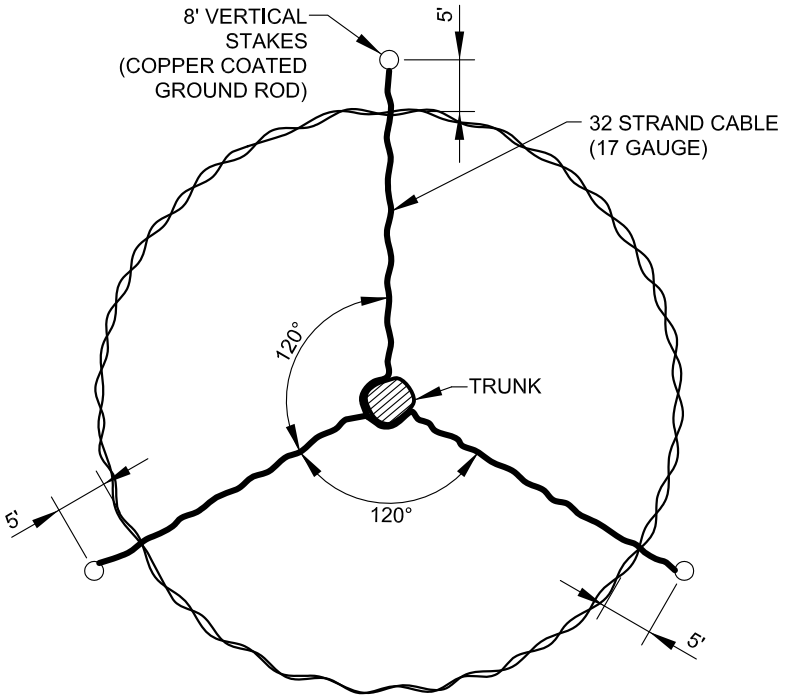

PLAN

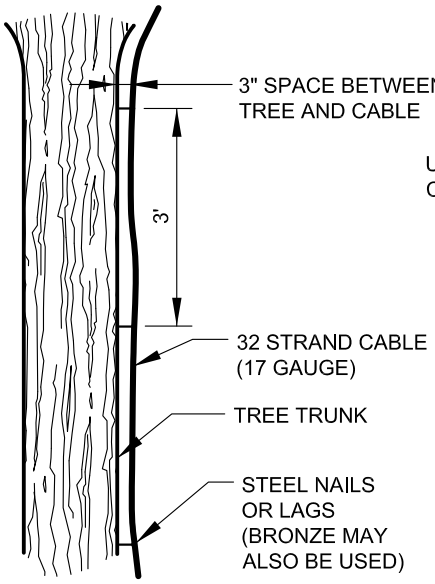

CROSS SECTION
32 STRAND
CABLE INSTALLATION

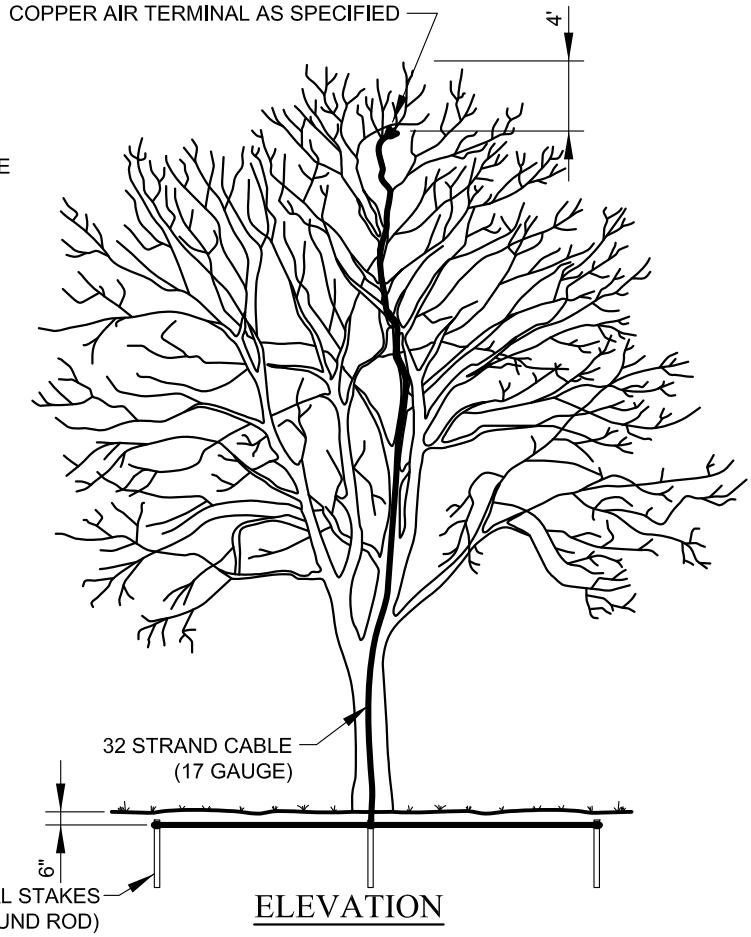

ELEVATION

APPROVED:

DIVISION CHIEF, TRANSPORTATION ENGINEERING AND CONSTRUCTION

DIRECTOR, DEPARTMENT OF TRANSPORTATION

CITY OF BALTIMORE
DEPARTMENT OF TRANSPORTATION
TRANSPORTATION ENGINEERING AND CONSTRUCTION

ISSUED	REVISED	REVISED
8 / 2010		

LIGHTNING PROTECTION FOR TREES

STANDARD NO. BC 701.11

SCALE : NONE

SHEET 1 OF 1

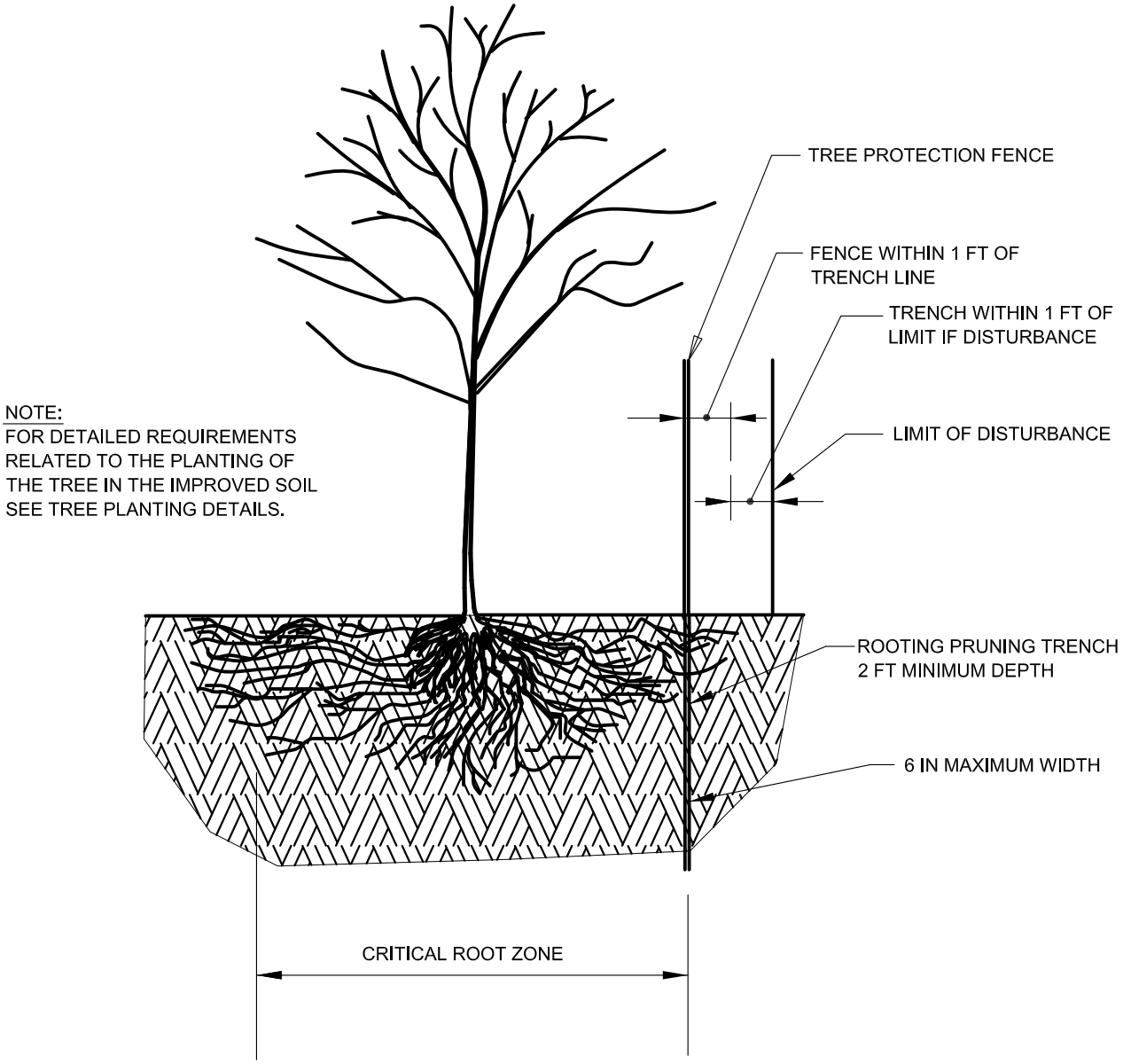

NOTES:

1. RETENTION AREAS TO BE ESTABLISHED AS PART OF THE FOREST CONSERVATION PLAN REVIEW PROCESS.
2. BOUNDARIES OF RETENTION AREAS TO BE SITED, FLAGGED AND/OR FENCED PRIOR TO TRENCHING.
3. EXACT LOCATION OF TRENCH SHOULD BE IDENTIFIED.
4. TRENCH SHOULD BE IMMEDIATELY BACKFILLED WITH SOIL REMOVED OR ORGANIC SOIL.
5. ROOTS SHOULD BE CLEANLY CUT USING VIBRATOR KNIFE OR OTHER APPROPRIATE EQUIPMENT.

APPROVED:

DIVISION CHIEF, TRANSPORTATION ENGINEERING AND CONSTRUCTION

DIRECTOR, DEPARTMENT OF TRANSPORTATION

CITY OF BALTIMORE
DEPARTMENT OF TRANSPORTATION
TRANSPORTATION ENGINEERING AND CONSTRUCTION

ISSUED	REVISED	REVISED
8 / 2010		

ROOT PRUNING DETAIL

STANDARD NO.
BC 701.22

SCALE : NONE

SHEET 1 OF 1

NOTE:
1. NO SHRUB SHALL BE PLANTED CLOSER THAN 6' FROM ANY MAJOR, MINOR OR EVERGREEN TREES IN BED.
2. SPACING OF SHRUBS AND WIDTH OF BED ARE AS SHOWN ON THE PLANS OR AS OTHERWISE DIRECTED.
3. SHRUBS SHOULD BE PLANTED AN ADEQUATE DISTANCE FROM SIDEWALK RIGHT-OF-WAY BASED ON MATURE SIZE OR AS DIRECTED ON THE PLANS.

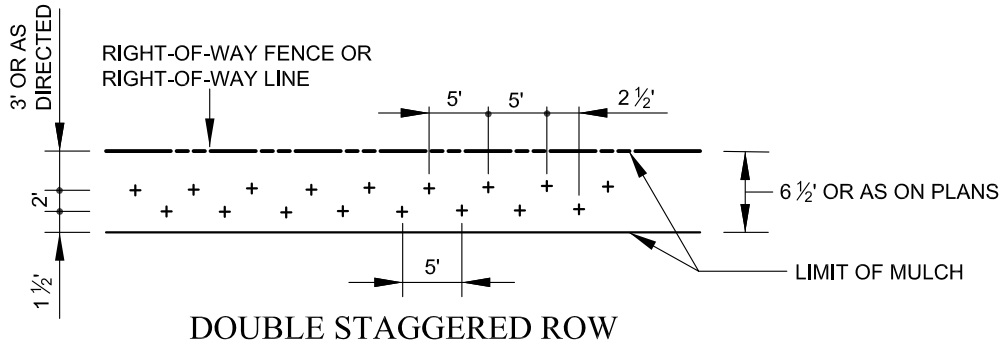

DOUBLE STAGGERED ROW
ADJACENT TO RIGHT-OF-WAY

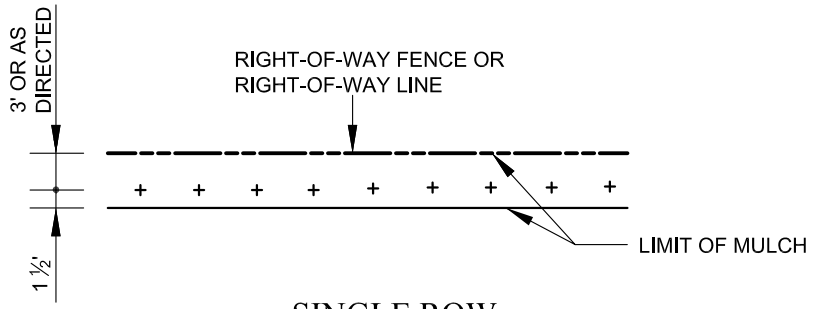

SINGLE ROW
ADJACENT TO RIGHT-OF-WAY

NOTE: MULCH ENTIRE AREA AS SPECIFIED

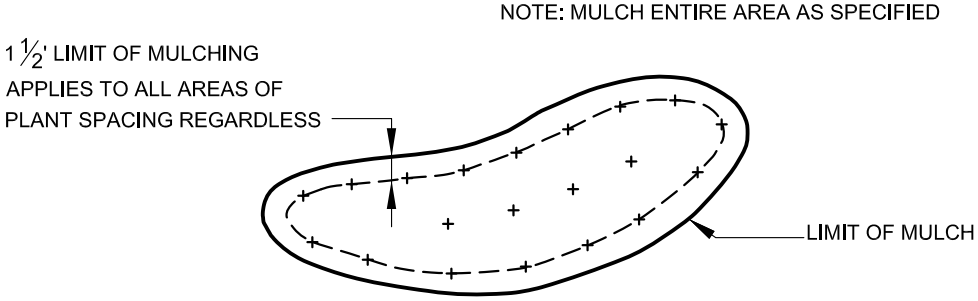

IRREGULAR BED

APPROVED:

DIVISION CHIEF, TRANSPORTATION ENGINEERING AND CONSTRUCTION

DIRECTOR, DEPARTMENT OF TRANSPORTATION

CITY OF BALTIMORE
DEPARTMENT OF TRANSPORTATION
TRANSPORTATION ENGINEERING AND CONSTRUCTION

ISSUED	REVISED	REVISED
8 / 2010		

MULCHING SHRUB BEDS AND PLANTING PATTERNS

STANDARD NO.
BC 701.31

SCALE : NONE

SHEET 1 OF 1

DETERMINING THE CRITICAL ROOT ZONE

THE CRITICAL ROOT ZONE OF A TREE IS THE ZONE IN WHICH THE MAJORITY OF A TREE'S ROOTS LAY. NINETY-FIVE PERCENT OF THE ROOTS OF MOST TREES WILL BE FOUND IN THE UPPER 24" OF THE SOIL. OF THOSE, THE MAJORITY OF THE ROOTS THAT SUPPLY THE NUTRITIENTS AND WATER TO THE TREE ARE FOUND IN THE UPPERMOST LAYER, JUST BELOW THE SOIL SURFACE. THE TOTAL AMOUNT OF A TREE'S ROOTS ARE GENERALLY PROPORTIONAL TO THE VOLUME OF THE TREE'S CAOPY. THEREFORE, IF THE ROOTS ONLY PENETRATE A THIN LAYER OF SOIL, THE ROOTS MUST SPREAD FAR FROM THE TREE, BEYOND THE LIMITS OF THE CANOPY.

ROOTS ARE VITAL TO THE FUNCTIONING OF ANY TREE. THEY PROVIDE STRUCTURAL SUPPORT AS WELL AS THE MAJOR MECHANISM FOR NUTRIENT AND WATER UPTAKE FOR USE BY THE REST OF THE TREE. DESTROYING A SECTION OF A TREE'S ROOTS WILL ULTIMATELY RESULT IN A PROPORTIONAL LOSS OF THE TREE'S CANOPY.

THE CRITICAL ROOT ZONE OF A TREE TO BE SAVED SHALL BE THE MINIMUM AREA PROTECTED WITH TREE PROTECTION FENCING.

THE FOLLOWING IS THE METHOD USED BY BALTIMORE CITY TO DETERMINE THE SIZE OF THE CRITICAL ROOT ZONE.

TREES GREATER THAN 8" DBH (DBH=DIAMETER BREAST HEIGHT):

1" DBH OF THE TREE = 1' RADIUS OF THE CRITICAL ROOT ZONE (CRZ)

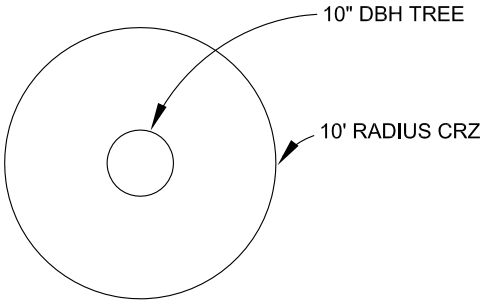

TREES 8" DBH AND SMALLER:

8 FT RADIUS CIRCLE AROUND THE TRUNK OF THE TREE.

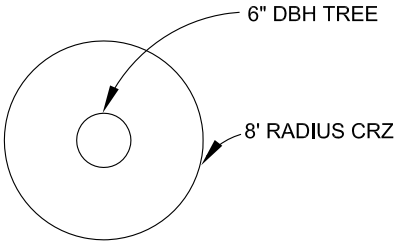

STAND ALONE TREES

1" DBH = 1.5' RADIUS OF THE CRITICAL ROOT ZONE

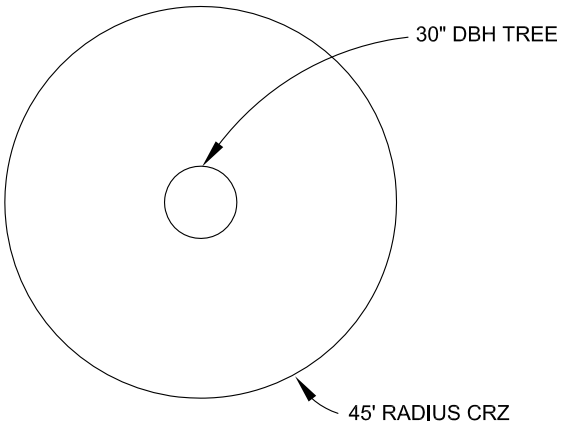

APPROVED:

DIVISION CHIEF, TRANSPORTATION ENGINEERING AND CONSTRUCTION

DIRECTOR, DEPARTMENT OF TRANSPORTATION

CITY OF BALTIMORE
DEPARTMENT OF TRANSPORTATION
TRANSPORTATION ENGINEERING AND CONSTRUCTION

TREE PROTECTION DETAIL FOR DETERMINATION OF CRITICAL ROOT ZONE

ISSUED	REVISED	REVISED
8 / 2010		

STANDARD NO.
BC 701.32

SCALE : NONE

SHEET 1 OF 1

TREE PROTECTION FENCING NOTES

1. TREE PROTECTION SHALL BE A MINIMUM OF 6'-0" HIGH CHAIN LINK FENCE MOUNTED ON VERTICAL PIPES DRIVEN 2'-0" INTO THE GROUND, AT APPROXIMATELY 8'-0" TO 10-0" (MAX.) ON CENTER, WITH NO GATES.

   IN AREAS WHERE SUPER SILT FENCE (SSF) AND THE TREE PROTECTION FENCE RUN PARALLEL, SSF MAY BE UTILIZED FOR TREE, PROTECTION PURPOSES UPON APPROVAL BY THE CITY ARBORIST OR DEPARTMENT OF PLANNING.

2. TREE PROTECTION FENCING SHALL BE ERECTED AT THE CRITICAL ROOT ZONE OR BEYOND AND/OR ON CONCRETE TO PROTECT TREE(S) IN CONCRETE AREAS PRIOR TO START OF ANY CLEARING, GRADING OR OTHER CONSTRUCTION ACTIVITY. SIGNS STATING "NO ENTRY, TREE PROTECTION AREA, CALL (410) 396-6109 TO REPORT VIOLATIONS" ARE TO BE POSTED IN BOTH ENGLISH AND SPANISH. SEE REFERENCE DETAILS. TREE PROTECTION SHALL NOT BE REMOVED UNTIL COMPLETION OF ALL CONSTRUCTION ACTIVITY.

3. FOR QUESTIONS RELATED TO TREE PROTECTION OR FOR FIELD INSPECTION OF TREE PROTECTION, CONTACT THE CITY ARBORIST AT (410) 396-6109 OR (410) 396-4369.

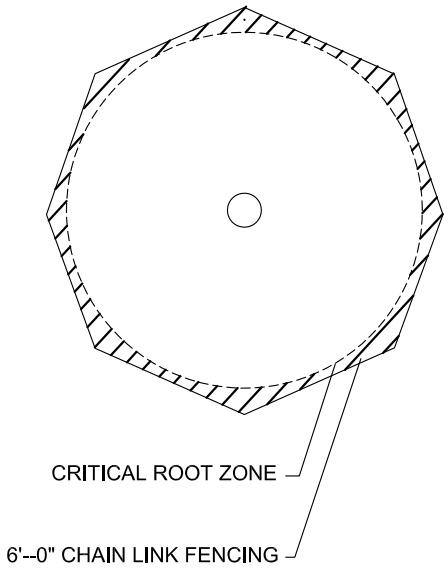

SINGLE OR SPECIMEN TREE

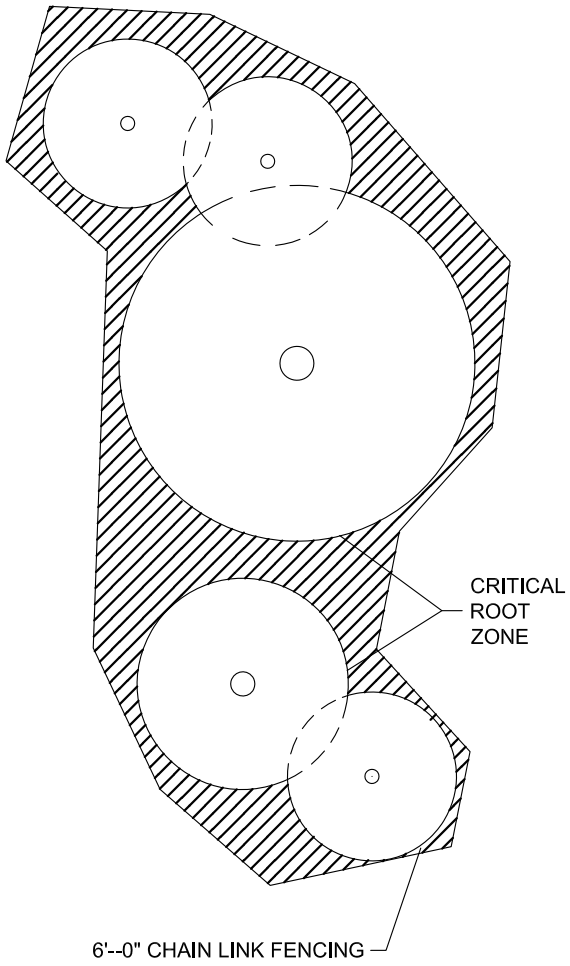

MULTIPLE OR CLUSTERED TREES

APPROVED:

DIVISION CHIEF, TRANSPORTATION ENGINEERING AND CONSTRUCTION

DIRECTOR, DEPARTMENT OF TRANSPORTATION

CITY OF BALTIMORE
DEPARTMENT OF TRANSPORTATION
TRANSPORTATION ENGINEERING AND CONSTRUCTION

ISSUED	REVISED	REVISED
8 / 2010		

TREE PROTECTION FENCE, PLAN

STANDARD NO.
BC 701.33

SCALE : NONE

SHEET 1 OF 1

12" STANDARD SIGN DIMENSION

18" STANDARD SIGN DIMENSION

NO ENTRY

TREE PRESERVATION AREA

CALL: (410) 396-6109

TO REPORT VIOLATIONS

OR FOR MORE INFORMATION

PROHIBIDO ENTRAR

ZONA DE PROTECTION DEL ARBOL

LLAMAR TEL: (410) 396-6109

PARA REPORTAR INFRACCIONES

O POR MAS INFORMACION

CITY OF BALTIMORE 1797	APPROVED: Bimal Devkota DIVISION CHIEF, TRANSPORTATION ENGINEERING AND CONSTRUCTION Khalil Zaid DIRECTOR, DEPARTMENT OF TRANSPORTATION	CITY OF BALTIMORE DEPARTMENT OF TRANSPORTATION TRANSPORTATION ENGINEERING AND CONSTRUCTION	ISSUED 8 / 2010	REVISED	REVISED
		TYPICAL SIGNAGE FOR TREE PRESERVATION AREA SIGN	STANDARD NO. BC 701.34		
			SCALE : NONE	SHEET 1 OF 1	

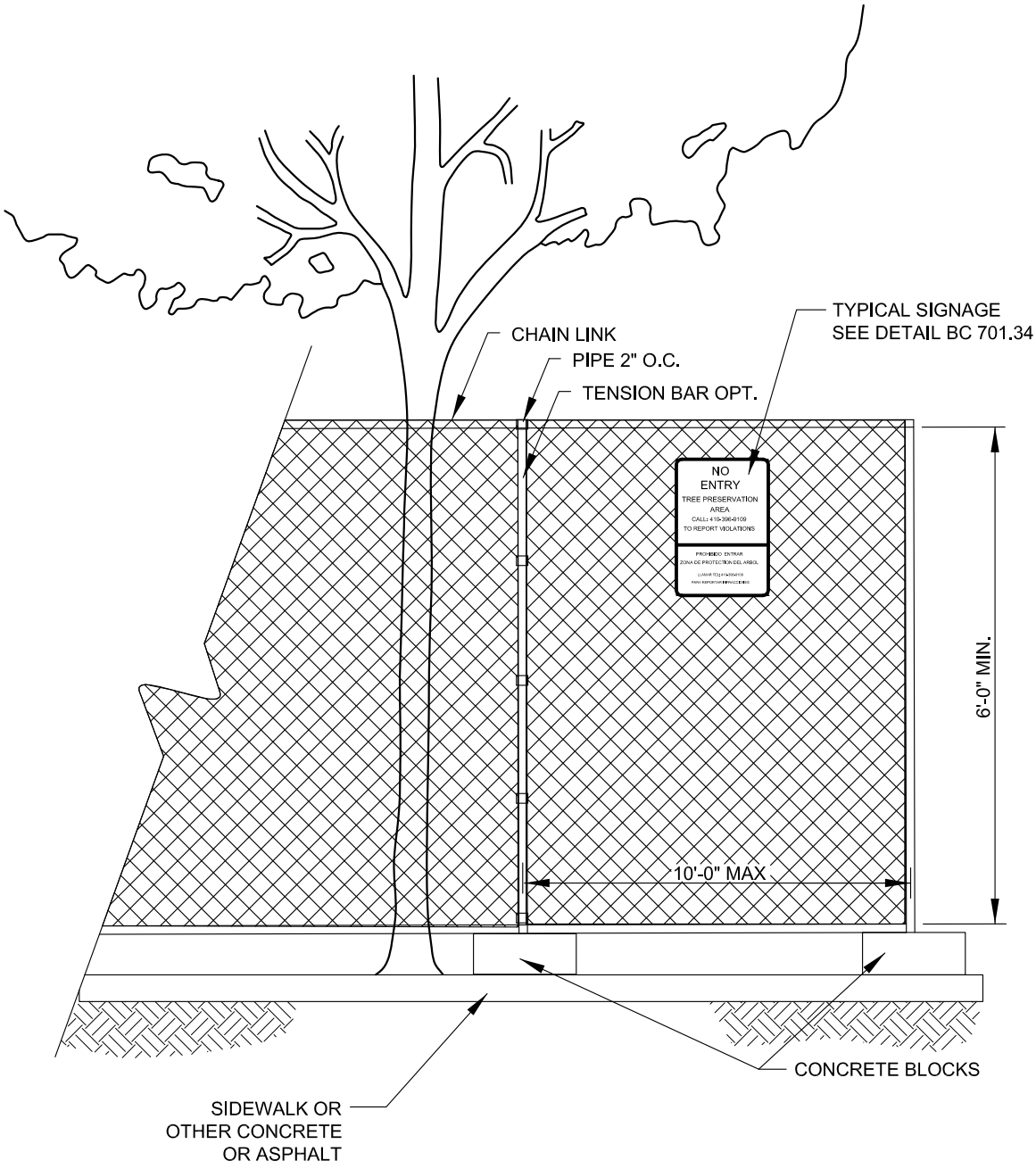

APPROVED :

DIVISION CHIEF, TRANSPORTATION ENGINEERING AND CONSTRUCTION

DIRECTOR, DEPARTMENT OF TRANSPORTATION

CITY OF BALTIMORE
DEPARTMENT OF TRANSPORTATION
TRANSPORTATION ENGINEERING AND CONSTRUCTION

TREE PROTECTION FENCE OVER CONCRETE OR ASPHALT, ELEVATION

ISSUED	REVISED	REVISED
8 / 2010		

STANDARD NO.
BC 701.35

SCALE : NONE

SHEET 1 OF 1

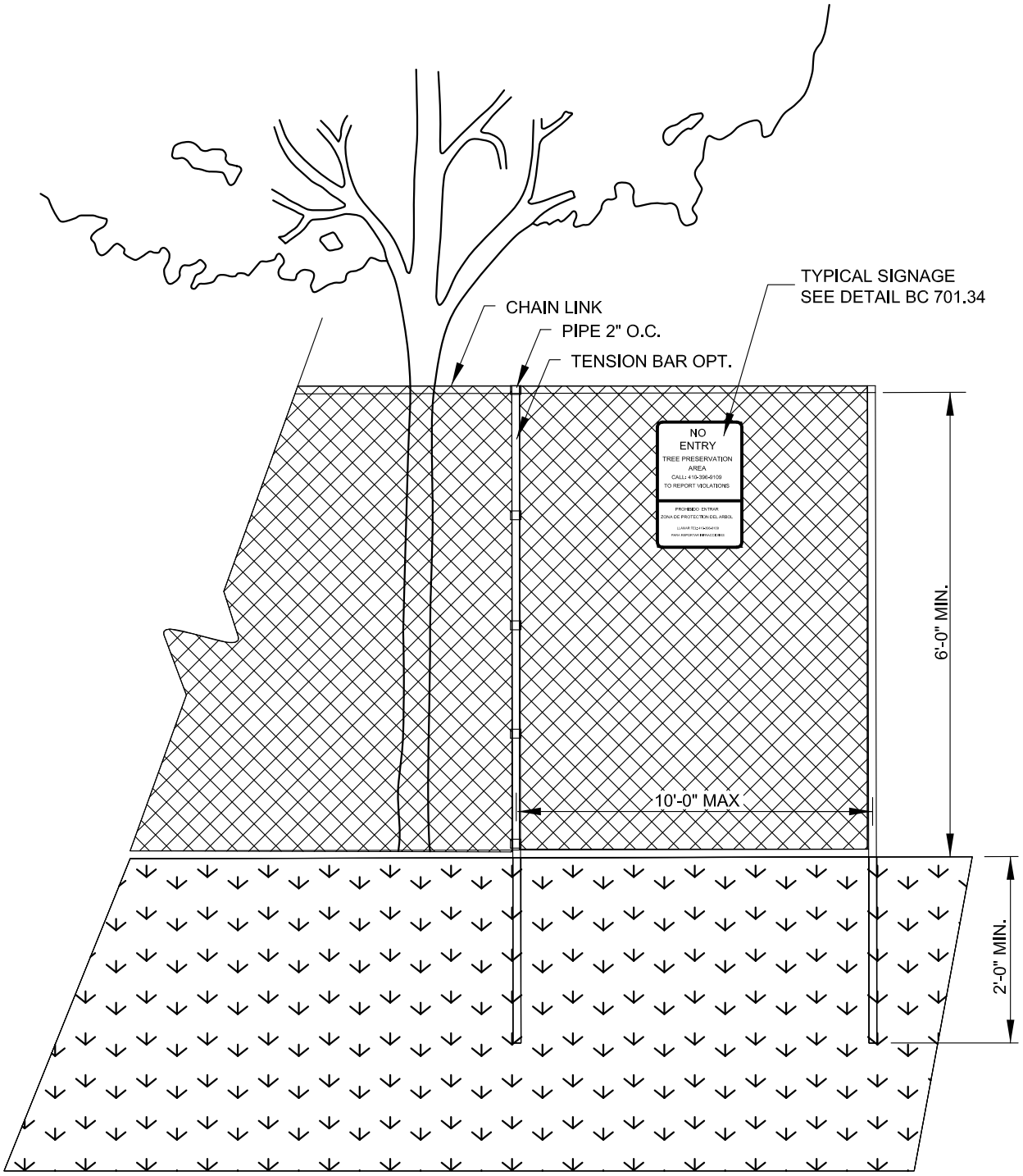

SEE DETAIL: BC 701.33

APPROVED :

DIVISION CHIEF, TRANSPORTATION ENGINEERING AND CONSTRUCTION

DIRECTOR, DEPARTMENT OF TRANSPORTATION

CITY OF BALTIMORE
DEPARTMENT OF TRANSPORTATION
TRANSPORTATION ENGINEERING AND CONSTRUCTION

TREE PROTECTION FENCE, FOR GRASS AREAS, ELEVATION

ISSUED	REVISED	REVISED
8 / 2010		

STANDARD NO.
BC 701.36

SCALE : NONE

SHEET 1 OF 1

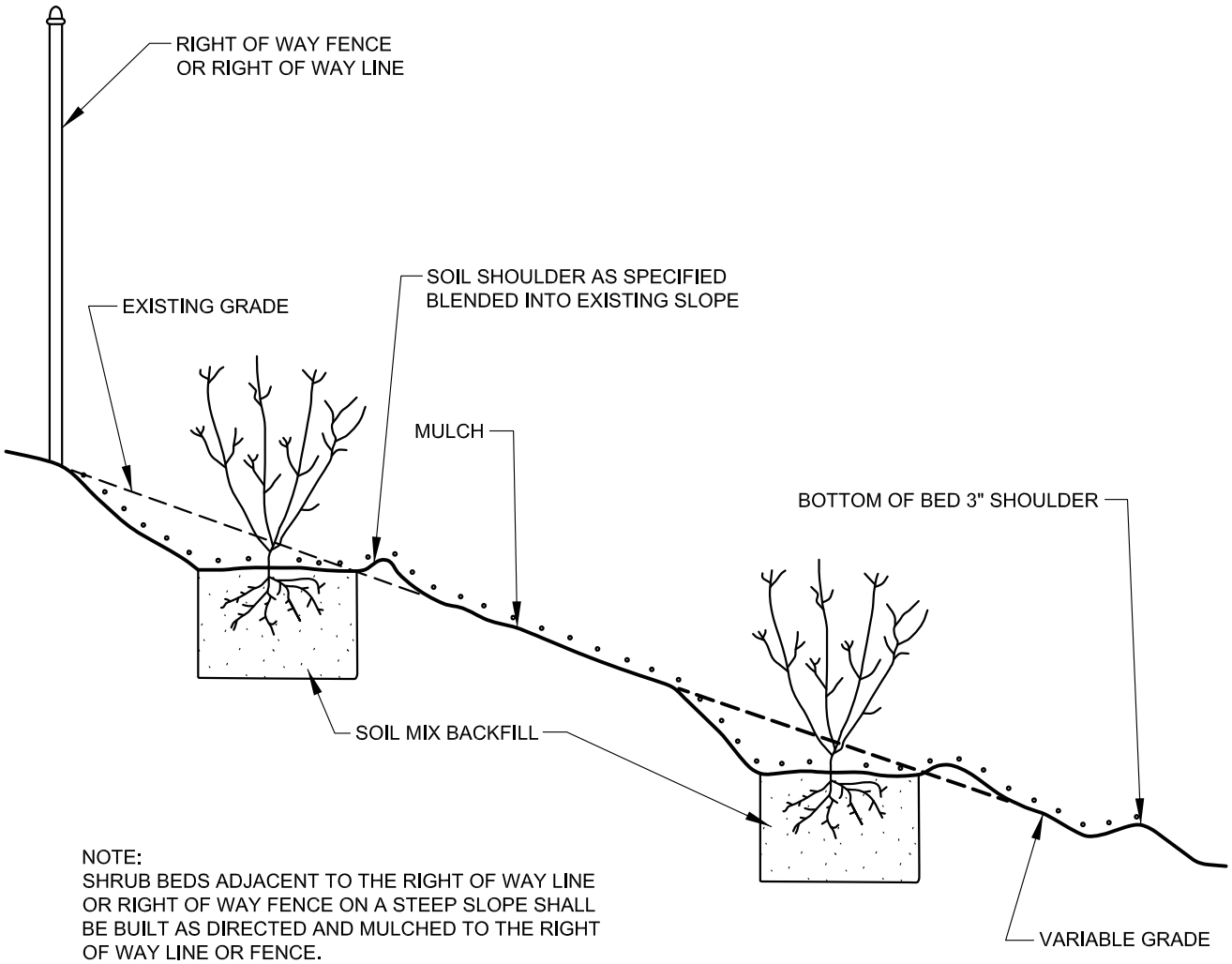

NOTE:
SHRUB BEDS ADJACENT TO THE RIGHT OF WAY LINE OR RIGHT OF WAY FENCE ON A STEEP SLOPE SHALL BE BUILT AS DIRECTED AND MULCHED TO THE RIGHT OF WAY LINE OR FENCE.

APPROVED:

DIVISION CHIEF, TRANSPORTATION ENGINEERING AND CONSTRUCTION

DIRECTOR, DEPARTMENT OF TRANSPORTATION

CITY OF BALTIMORE
DEPARTMENT OF TRANSPORTATION
TRANSPORTATION ENGINEERING AND CONSTRUCTION

SOIL SHOULDERS FOR SHRUB BEDS PLANTED ON SLOPES

ISSUED	REVISED	REVISED
8 / 2010		

STANDARD NO.
BC 701.41

SCALE : NONE

SHEET 1 OF 1

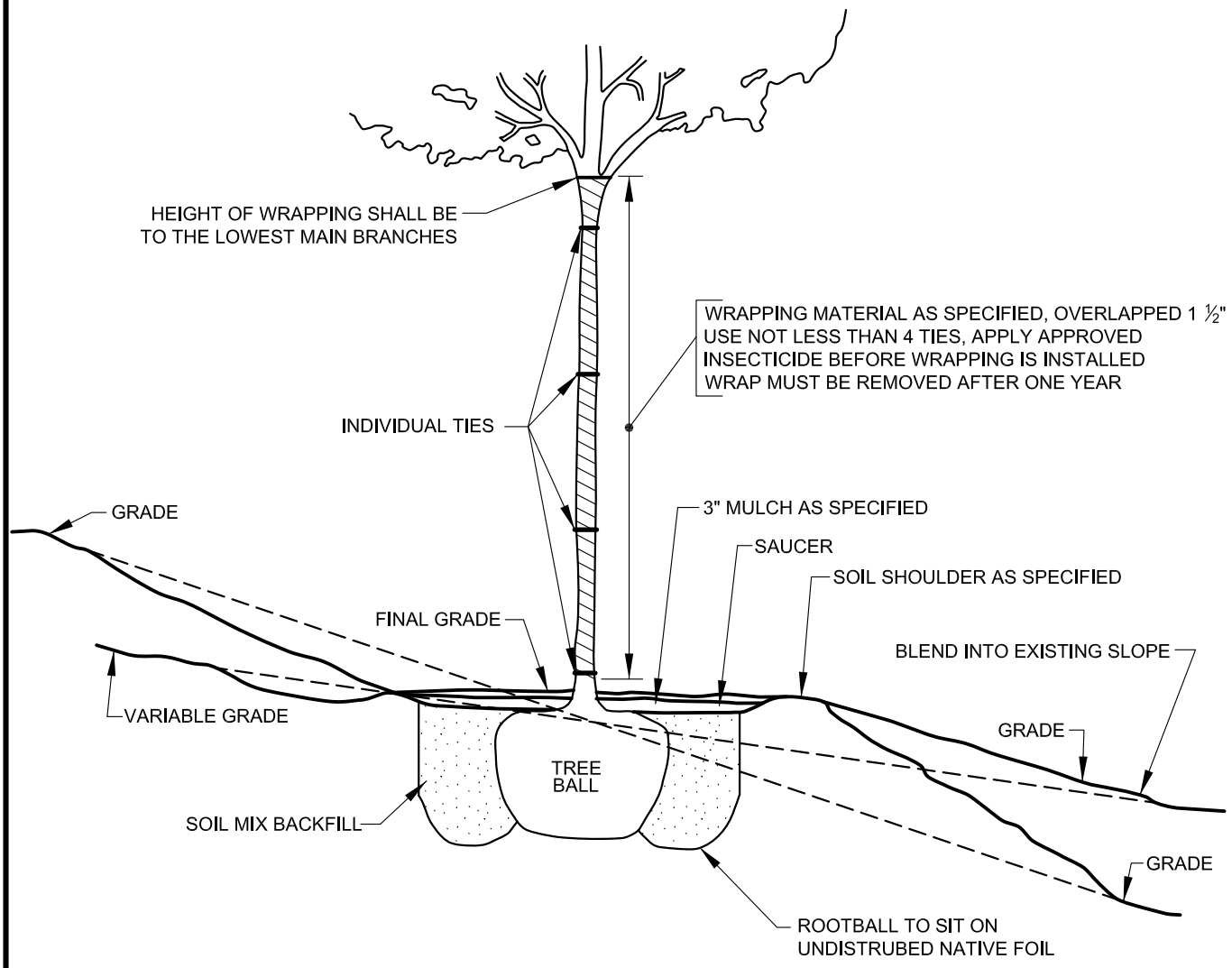

SEE DETAILS BC 702.02 AND BC 702.03

APPROVED:

DIVISION CHIEF, TRANSPORTATION ENGINEERING AND CONSTRUCTION

DIRECTOR, DEPARTMENT OF TRANSPORTATION

CITY OF BALTIMORE
DEPARTMENT OF TRANSPORTATION
TRANSPORTATION ENGINEERING AND CONSTRUCTION

ISSUED	REVISED	REVISED
8 / 2010		

WRAPPING TREE AND GRADING TREE ON SLOPE

STANDARD NO.
BC 701.51

SCALE : NONE

SHEET 1 OF 1

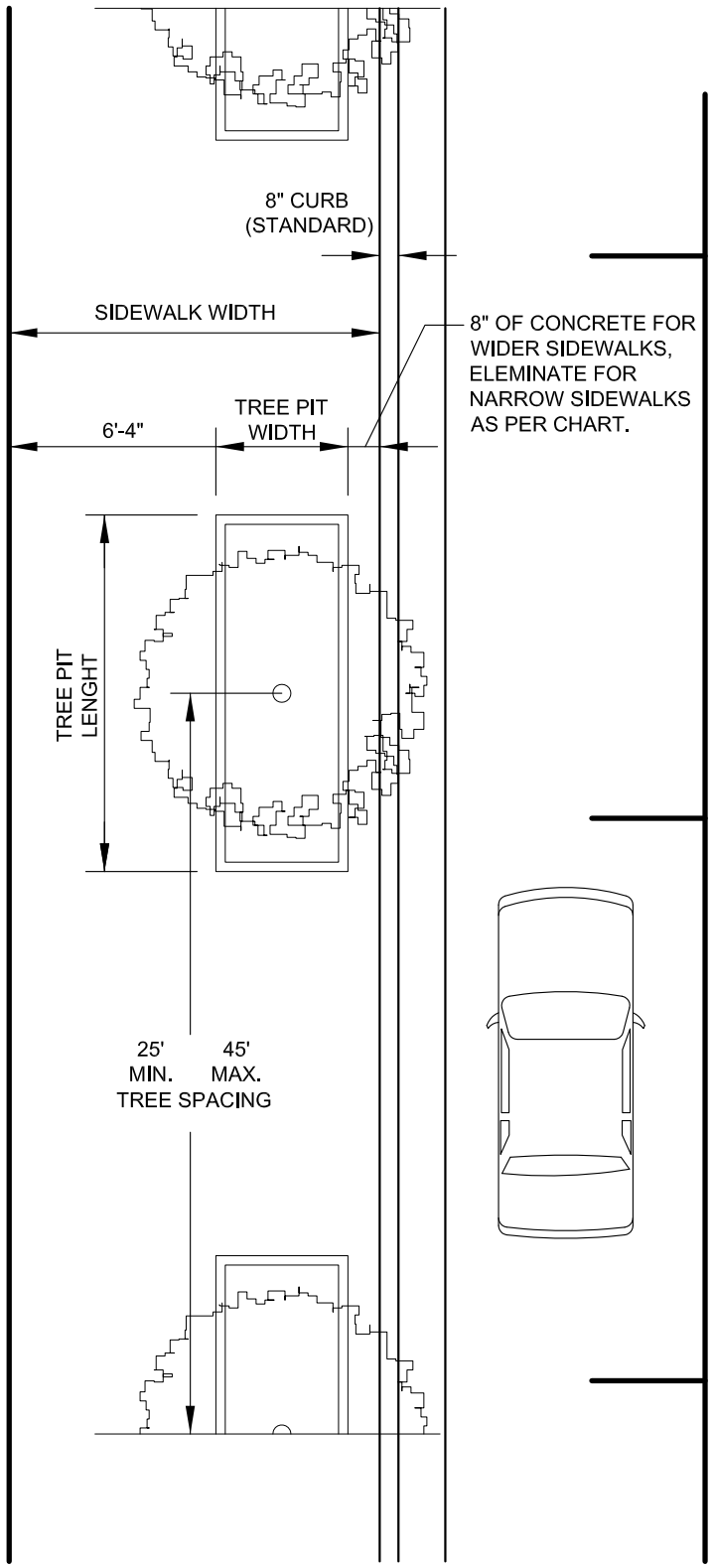

SIDEWALK WIDTH	GOALS FOR MINIMUM TREE PIT W x L
6' OR UNDER	SITE SPECIFIC, MAY NEED GRATE, PAVERS OR OTHER TREATMENT
7'	3' W x min. 12' L - LONGER AS POSSIBLE
8' - 9'	3' W x min. 12' L - LONGER AS POSSIBLE, MAY NEED GRATE, PAVERS OR OTHER TREATMENT
10' - 12'	3' W x min. 12' L - LONGER AS POSSIBLE w/ 8" OF CONCRETE BY CURB
13' OR MORE	3' W x min. 12' L - LONGER AS POSSIBLE w/ 8" OF CONCRETE BY CURB

CONTINUOUS PLANTING STRIPS SHOULD BE CONSIDERED

TREE PIT DIMENSIONS PER SIDEWALK WIDTH

APPROVED:

DIVISION CHIEF, TRANSPORTATION ENGINEERING AND CONSTRUCTION

DIRECTOR, DEPARTMENT OF TRANSPORTATION

CITY OF BALTIMORE
DEPARTMENT OF TRANSPORTATION
TRANSPORTATION ENGINEERING AND CONSTRUCTION

TREE PLANTING STANDARDS FOR SITE PLAN PROJECTS

ISSUED	REVISED	REVISED
8 / 2010		

STANDARD NO.
BC 701.61-1

SCALE : NONE

SHEET 1 OF 4

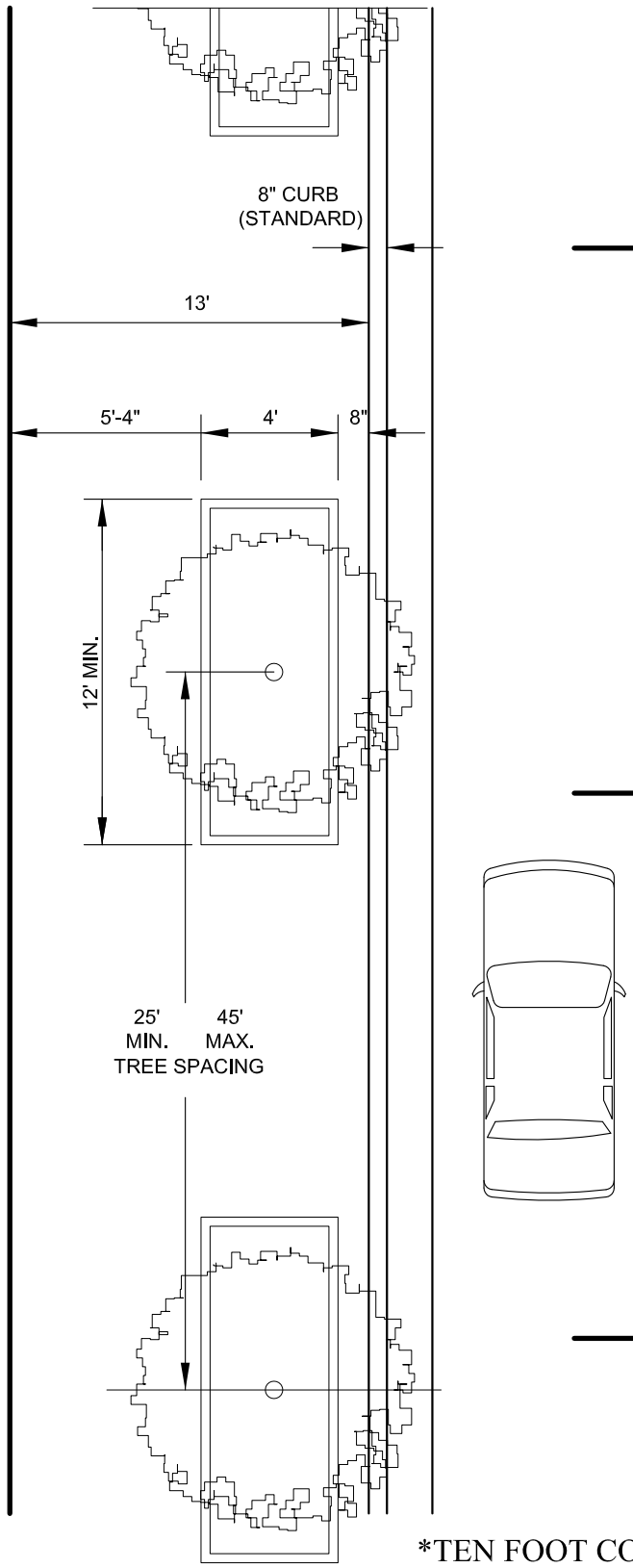

*TEN FOOT COMBINED

SIDEWALK AND PLANTING AREA

*OPTION ALLOWS FOR 6' WIDE PIT

APPROVED:

DIVISION CHIEF, TRANSPORTATION ENGINEERING AND CONSTRUCTION

DIRECTOR, DEPARTMENT OF TRANSPORTATION

CITY OF BALTIMORE
DEPARTMENT OF TRANSPORTATION
TRANSPORTATION ENGINEERING AND CONSTRUCTION

ISSUED	REVISED	REVISED
8 / 2010		

TREE PLANTING STANDARDS FOR SITE PLAN PROJECTS

STANDARD NO.
BC 701.61-2

SCALE : NONE

SHEET 2 OF 4

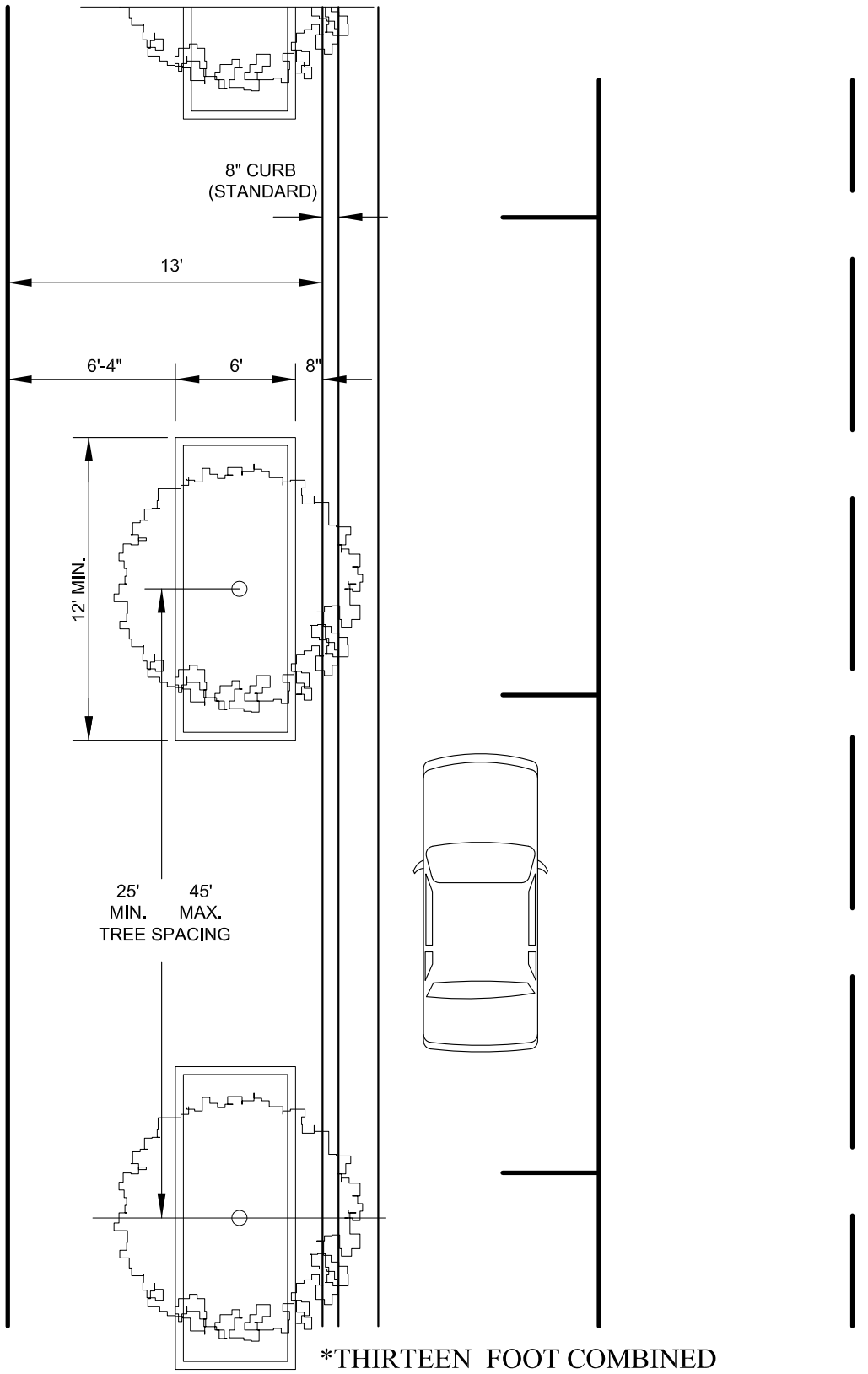

*THIRTEEN FOOT COMBINED

SIDEWALK AND PLANTING AREA

*OPTION ALLOWS FOR 6' WIDE PIT

APPROVED:

DIVISION CHIEF, TRANSPORTATION ENGINEERING AND CONSTRUCTION

DIRECTOR, DEPARTMENT OF TRANSPORTATION

CITY OF BALTIMORE
DEPARTMENT OF TRANSPORTATION
TRANSPORTATION ENGINEERING AND CONSTRUCTION

TREE PLANTING STANDARDS FOR SITE PLAN PROJECTS

ISSUED	REVISED	REVISED
8 / 2010		

STANDARD NO.
BC 701.61-3

SCALE : NONE

SHEET 3 OF 4

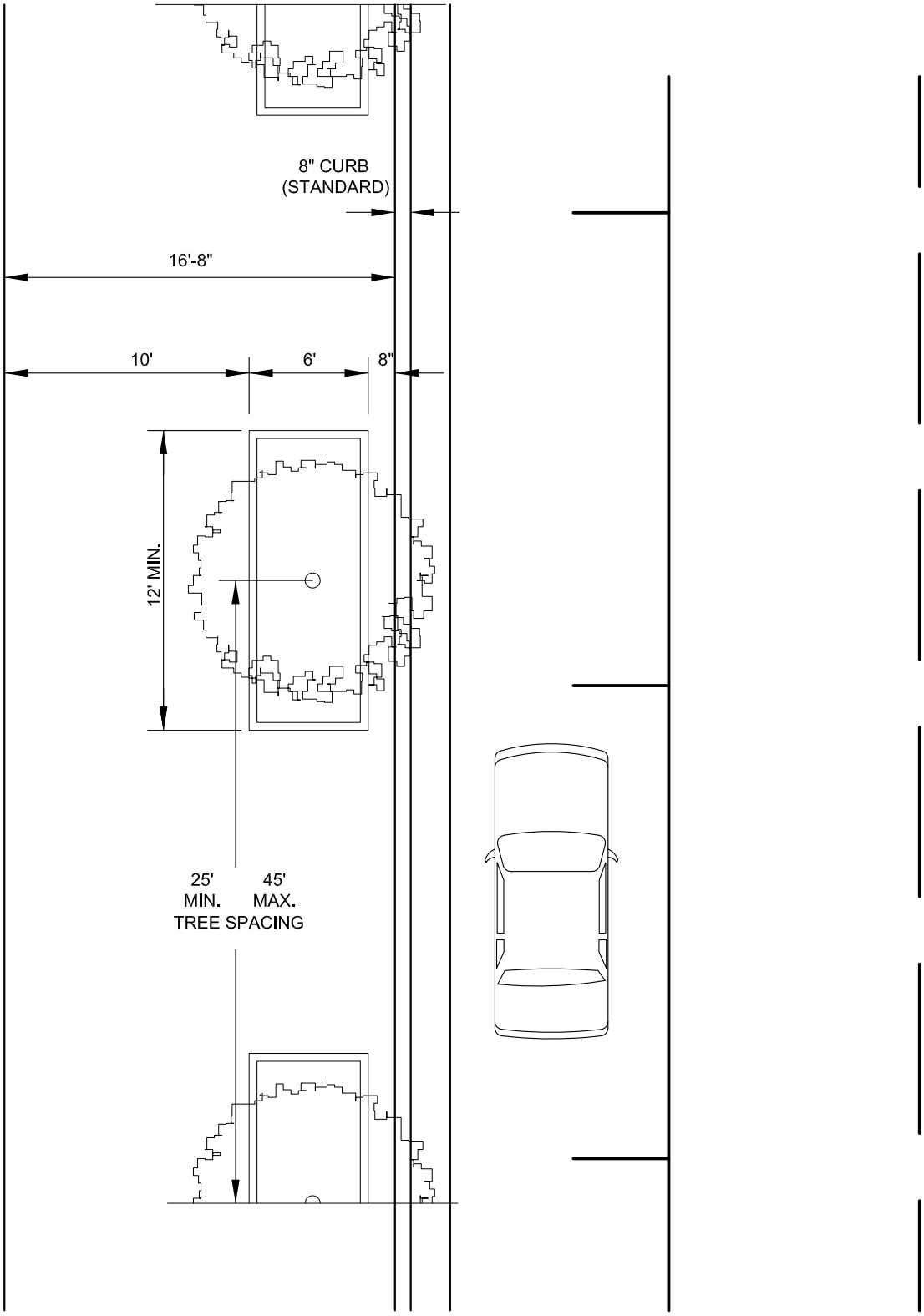

SIXTEEN FOOT EIGHT INCH SIDEWALK

AND PLANTING AREA

APPROVED :

DIVISION CHIEF, TRANSPORTATION ENGINEERING AND CONSTRUCTION

DIRECTOR, DEPARTMENT OF TRANSPORTATION

CITY OF BALTIMORE
DEPARTMENT OF TRANSPORTATION
TRANSPORTATION ENGINEERING AND CONSTRUCTION

TREE PLANTING STANDARDS FOR SITE PLAN PROJECTS

ISSUED	REVISED	REVISED
8 / 2010		

STANDARD NO.
BC 701.61-4

SCALE : NONE

SHEET 4 OF 4

NOTES:

1. WHEN TREES ARE PLANTED IN PUBLIC RIGHT-OF-WAY OR IN A PUBLIC EASEMENT A PERMIT SHALL BE REQUIRED. SUCH PERMIT WILL BE ISSUED AT THE DEPARTMENT OF GENERAL SERVICES ACCORDING TO THE PROVISIONS OF THE CURRENT BALTIMORE CITY CODE.

2. SPEICES SHALL BE SELECTED FROM THOSE LISTED IN THE REGULATION CITED ABOVE SPACING REQUIREMENTS SHALL BE DETERMINED BY THE SIZE AND HABIT OF THE PLANTS CHOSEN AND SHALL BE SPECIFIED IN THE PERMIT WHEN IT IS ISSUED.

3. PLANTING WILL NOT BE PERMITTED ON PUBLIC PROPERTY WHICH WOULD ENDANGER THE PUBLIC SAFETY BY OBSTRUCTING THE VISION OF VEHICULAR OR PEDESTRIAN TRAFFIC OR CONFLICTING WITH THE SAFE FUNCTION OR UTILITY WIRES.

4. STREET TREE PLANS WHICH ENVISION SPECIAL ARCHITECTURAL OR VISUAL AESTHETIC EFFECTS SHALL BE REVIEWED BY THE DEPARTMENT OF RECREATION AND PARKS AND WHEN JUSTIFIED SPECIAL PERMITS WILL BE ISSUED.

5. STREET TREE SHALL BE NURSERY GROWN SPECIMENS WHICH MEET THE REQUIREMENTS FOR STREET TREES SET FORTH IN THE AMERICAN STANDARD FOR NURSERY STOCK - ANSI Z60 AND SHALL BE TYPICAL OF THEIR SPECIES HAVING FULLY DEVELOPED CROWNS AND SINGLE LEADERS, THEY SHALL BE BRANCHED TO ONE THIRD OF THEIR HEIGHT AT THE TIME OF PLANTING AND ELEVATED AS NECESSARY DURING THEIR GROWTH TO ASSURE A CLEARANCE FOR PEDESTRIANS AT MATURITY, GREATER CLEARANCE MAY BE REQUIRED IN SITUATIONS WHERE TRUCK AND BUS TRAFFIC MUST BE ACCOMMODATED.

6. ALL NURSERY STOCK USED AS STREET TREES SHALL BE VIGOROUS. HEALTHY AND FREE OF DISEASE OR INFESTATION. ALL PLANTS SHALL BE INSPECTED AT THE NURSERY AND SHIPMENTS SHALL BEAR THE APPROPRIATE CERTIFICATE OF INSPECTION PROVIDED BY THE STATE OF ORIGIN FOR PLANTING MATERIALS. ALL PLANTING MUST BE DONE TO CURRENT ANSI STANDARDS.

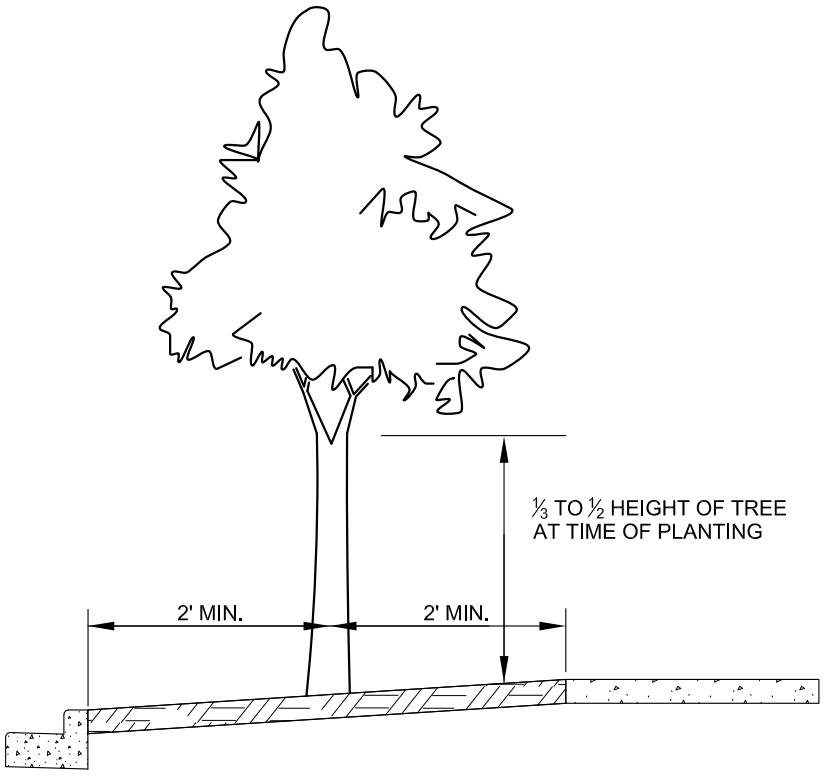

APPROVED :

DIVISION CHIEF, TRANSPORTATION ENGINEERING AND CONSTRUCTION

DIRECTOR, DEPARTMENT OF TRANSPORTATION

CITY OF BALTIMORE
DEPARTMENT OF TRANSPORTATION
TRANSPORTATION ENGINEERING AND CONSTRUCTION

GENERAL STANDARD FOR TREE PLANTING

ISSUED	REVISED	REVISED
8 / 2010		

STANDARD NO.
BC 702.01

SCALE : NONE

SHEET 1 OF 1

AT PLANTING PRUNE ONLY CROSSING LIMBS, CO-DOMINANT LEADERS, BROKEN OR DEAD BRANCHES, AND ANY BRANCHES THAT POSE A HAZARD TO PEDESTRIANS

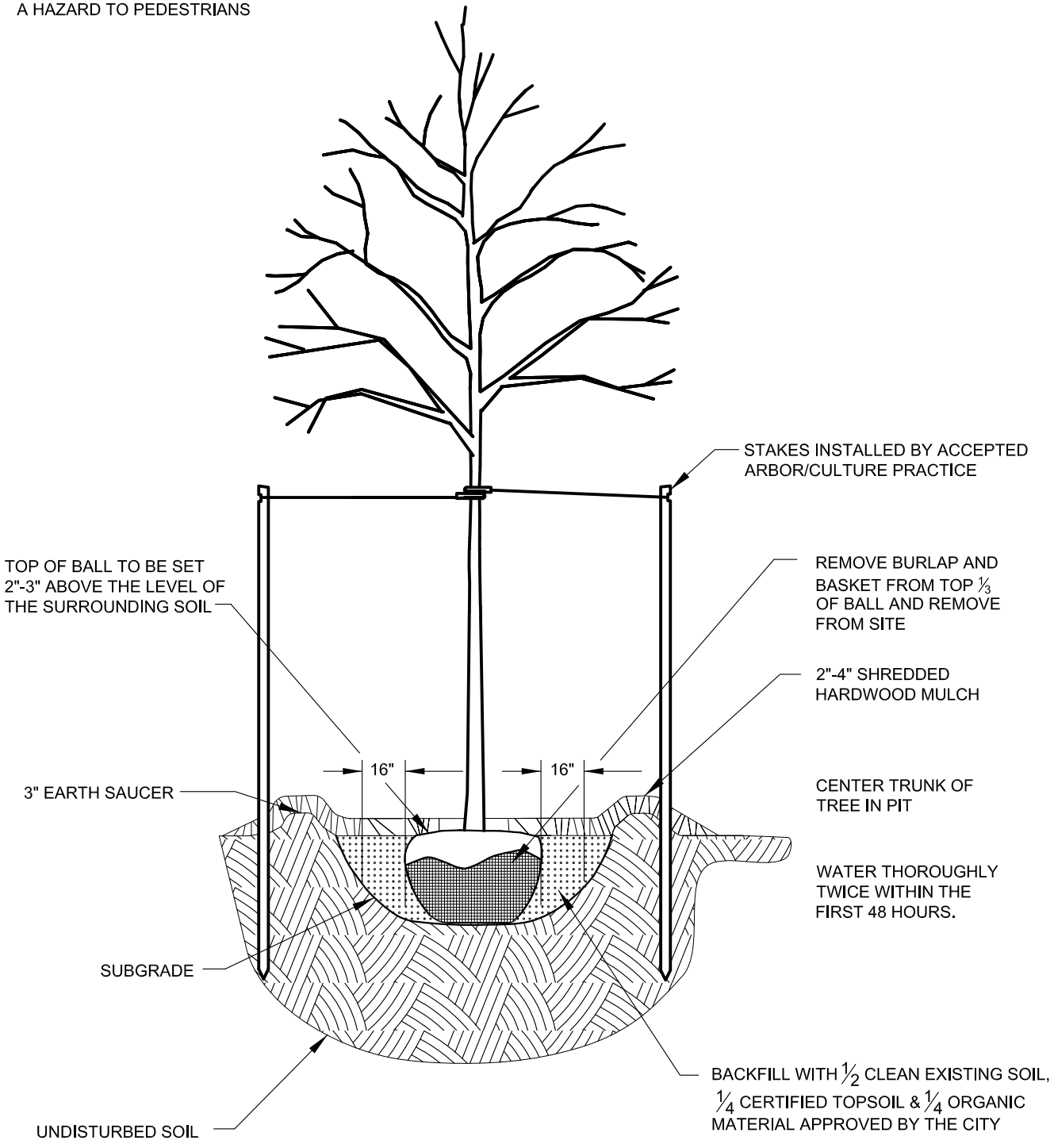

APPROVED:

DIVISION CHIEF, TRANSPORTATION ENGINEERING AND CONSTRUCTION

DIRECTOR, DEPARTMENT OF TRANSPORTATION

CITY OF BALTIMORE
DEPARTMENT OF TRANSPORTATION
TRANSPORTATION ENGINEERING AND CONSTRUCTION

ISSUED	REVISED	REVISED
8 / 2010		

PLANTING TREES UNDER 5" CALIPER

STANDARD NO.
BC 702.02

SCALE : NONE

SHEET 1 OF 1

AT PLANTING PRUNE ONLY CROSSING LIMBS, CO-DOMINANT LEADERS, BROKEN OR DEAD BRANCHES, AND ANY BRANCHES THAT POSE A HAZARD TO PEDESTRIANS

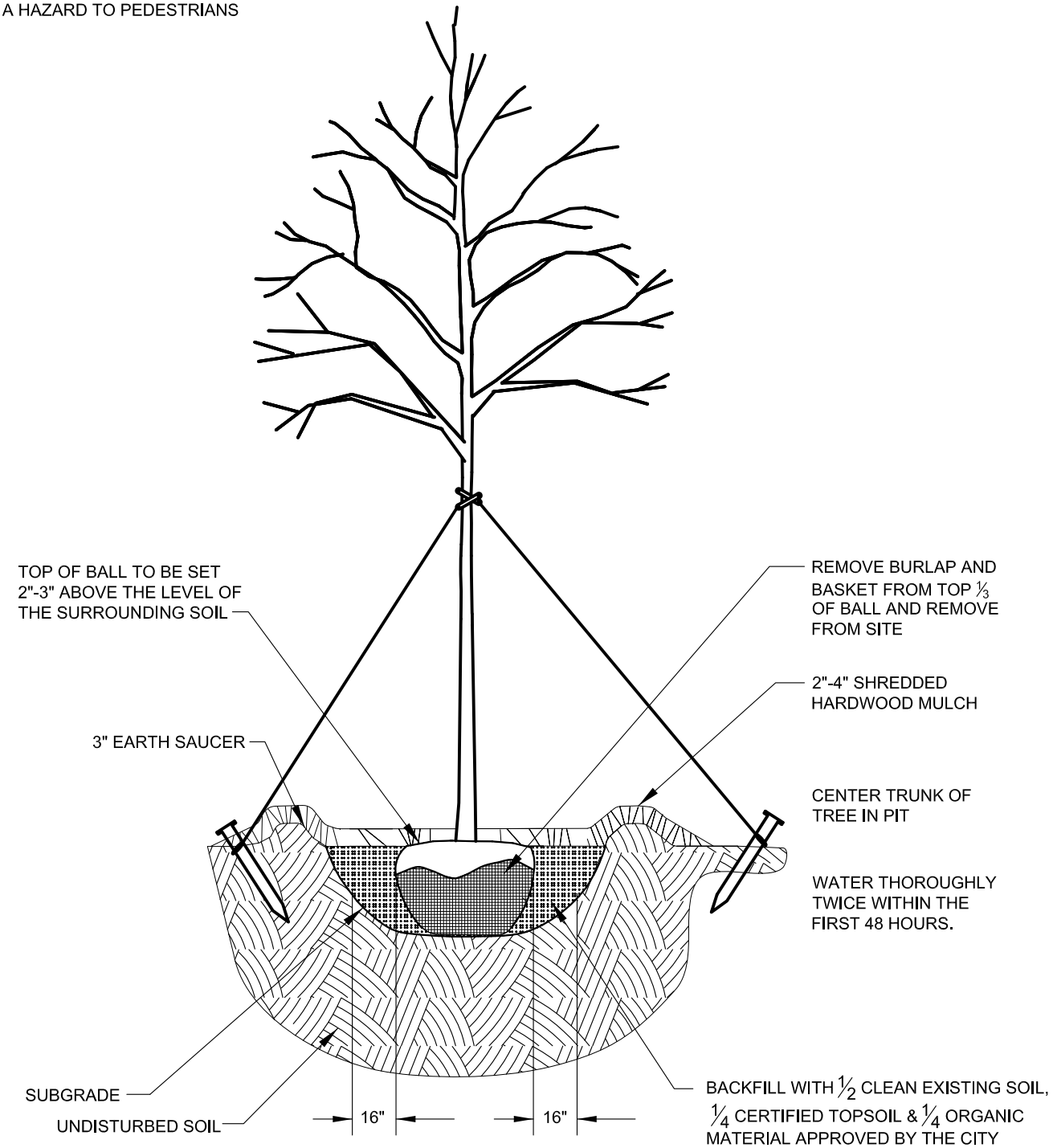

APPROVED:

DIVISION CHIEF, TRANSPORTATION ENGINEERING AND CONSTRUCTION

DIRECTOR, DEPARTMENT OF TRANSPORTATION

CITY OF BALTIMORE
DEPARTMENT OF TRANSPORTATION
TRANSPORTATION ENGINEERING AND CONSTRUCTION

PLANTING TREES 5" CALIPER AND OVER

ISSUED	REVISED	REVISED
8 / 2010		

STANDARD NO.
BC 702.03

SCALE : NONE

SHEET 1 OF 1

AT PLANTING PRUNE ONLY CROSSING LIMBS, CO-DOMINANT LEADERS, BROKEN OR DEAD BRANCHES, AND ANY BRANCHES THAT POSE A HAZARD TO PEDESTRIANS

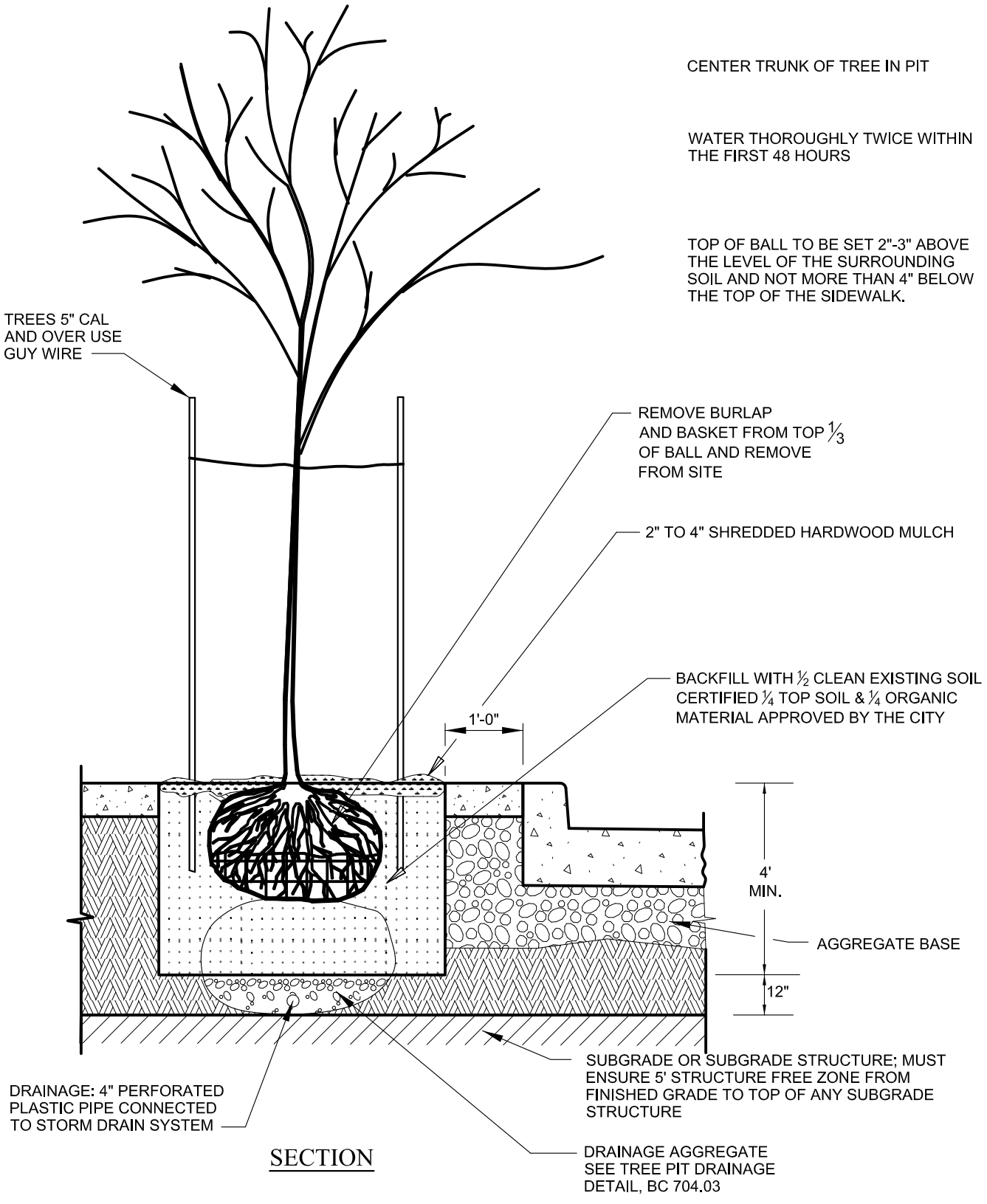

SECTION

APPROVED:

DIVISION CHIEF, TRANSPORTATION ENGINEERING AND CONSTRUCTION

DIRECTOR, DEPARTMENT OF TRANSPORTATION

CITY OF BALTIMORE
DEPARTMENT OF TRANSPORTATION
TRANSPORTATION ENGINEERING AND CONSTRUCTION

TREE PLANTING DETAIL FOR STREET TREE IN PIT

ISSUED	REVISED	REVISED
8 / 2010		

STANDARD NO.
BC 702.04

SCALE : NONE

SHEET 1 OF 1

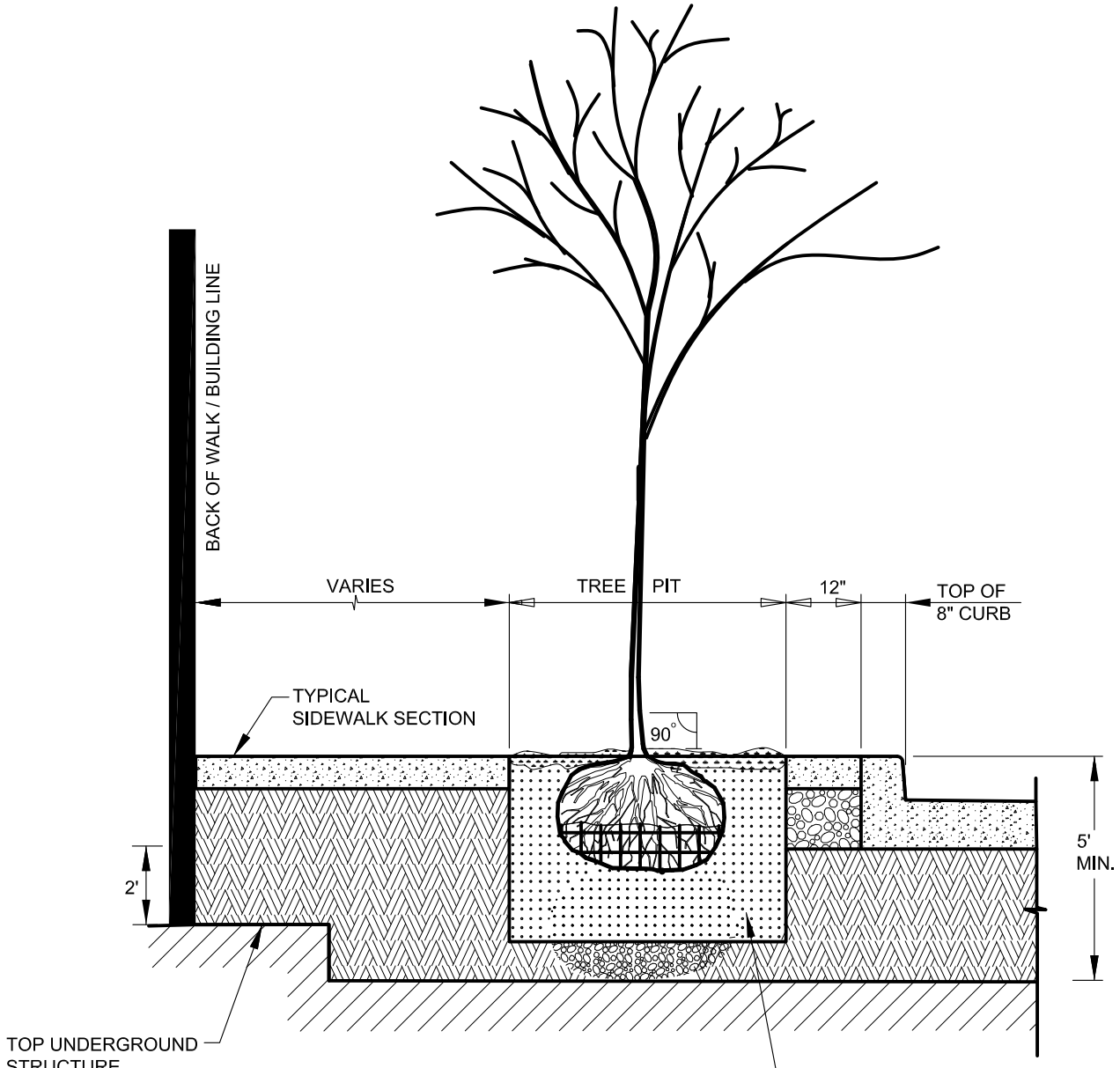

SECTION

APPROVED :

DIVISION CHIEF, TRANSPORTATION ENGINEERING AND CONSTRUCTION

DIRECTOR, DEPARTMENT OF TRANSPORTATION

CITY OF BALTIMORE
DEPARTMENT OF TRANSPORTATION
TRANSPORTATION ENGINEERING AND CONSTRUCTION

ISSUED	REVISED	REVISED
8 / 2010		

STRUCTURE FREE ZONE GARAGE OR OTHER CAVITY EXTENDING UNDER SIDEWALK

STANDARD NO.
BC 702.05

SCALE : NONE

SHEET 1 OF 1

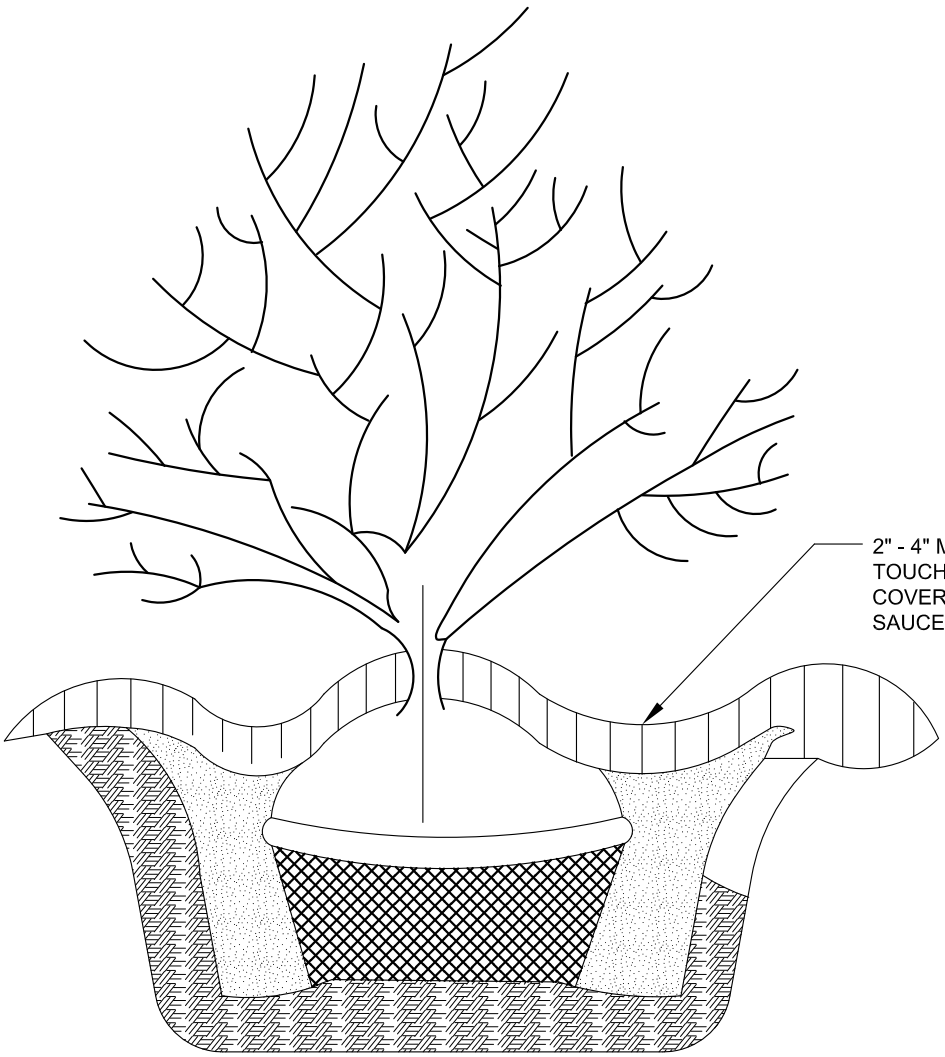

APPROVED :

DIVISION CHIEF, TRANSPORTATION ENGINEERING AND CONSTRUCTION

DIRECTOR, DEPARTMENT OF TRANSPORTATION

CITY OF BALTIMORE
DEPARTMENT OF TRANSPORTATION
TRANSPORTATION ENGINEERING AND CONSTRUCTION

MULCH DETAIL FOR TREES

ISSUED	REVISED	REVISED
8 / 2010		

STANDARD NO.
BC 702.06

SCALE : NONE

SHEET 1 OF 1

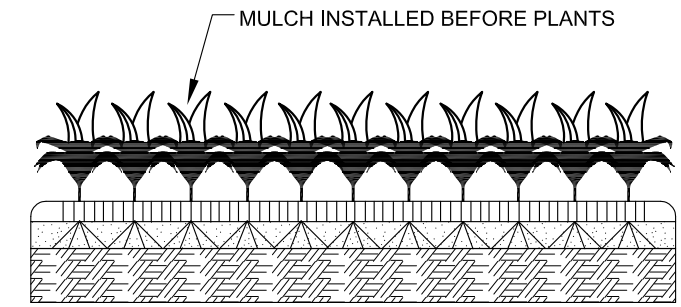

GROUND COVER PLANTING DETAIL

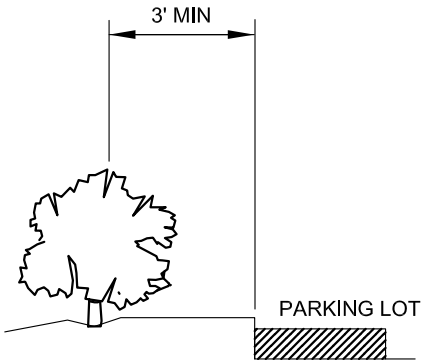

TYPICAL HEDGE PLANTING AROUND PARKING LOTS

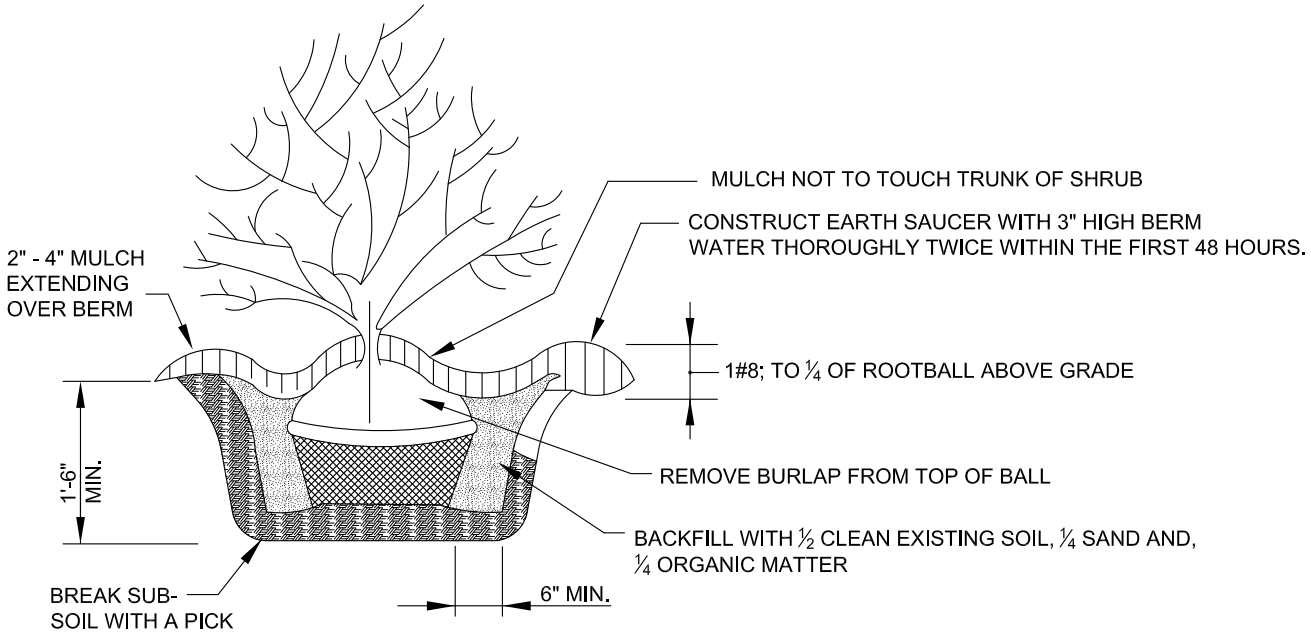

SHRUB PLANTING DETAIL

APPROVED:

DIVISION CHIEF, TRANSPORTATION ENGINEERING AND CONSTRUCTION

DIRECTOR, DEPARTMENT OF TRANSPORTATION

CITY OF BALTIMORE
DEPARTMENT OF TRANSPORTATION
TRANSPORTATION ENGINEERING AND CONSTRUCTION

ISSUED	REVISED	REVISED
8 / 2010		

SHRUB AND GROUND COVER PLANTING DETAIL

STANDARD NO.
BC 702.07

SCALE : NONE

SHEET 1 OF 1

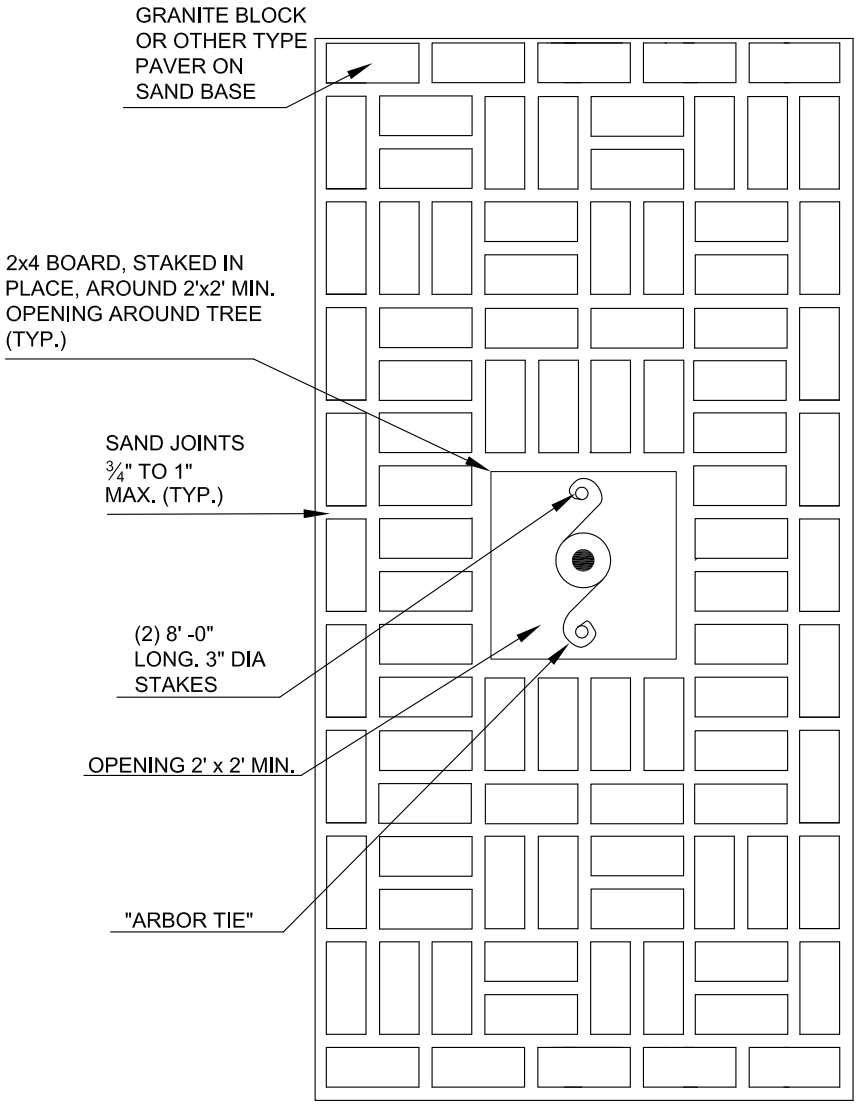

OR AS PER CONTRACT PLANS

APPROVED:

DIVISION CHIEF, TRANSPORTATION ENGINEERING AND CONSTRUCTION

DIRECTOR, DEPARTMENT OF TRANSPORTATION

CITY OF BALTIMORE
DEPARTMENT OF TRANSPORTATION
TRANSPORTATION ENGINEERING AND CONSTRUCTION

ISSUED	REVISED	REVISED
8 / 2010		

TREE PIT PAVING DETAIL: GRANITE OR CONCRETE BLOCK FOR USE IN HIGH TRAFFIC AREAS ONLY

STANDARD NO.
BC 704.01

SCALE : NONE

SHEET 1 OF 1

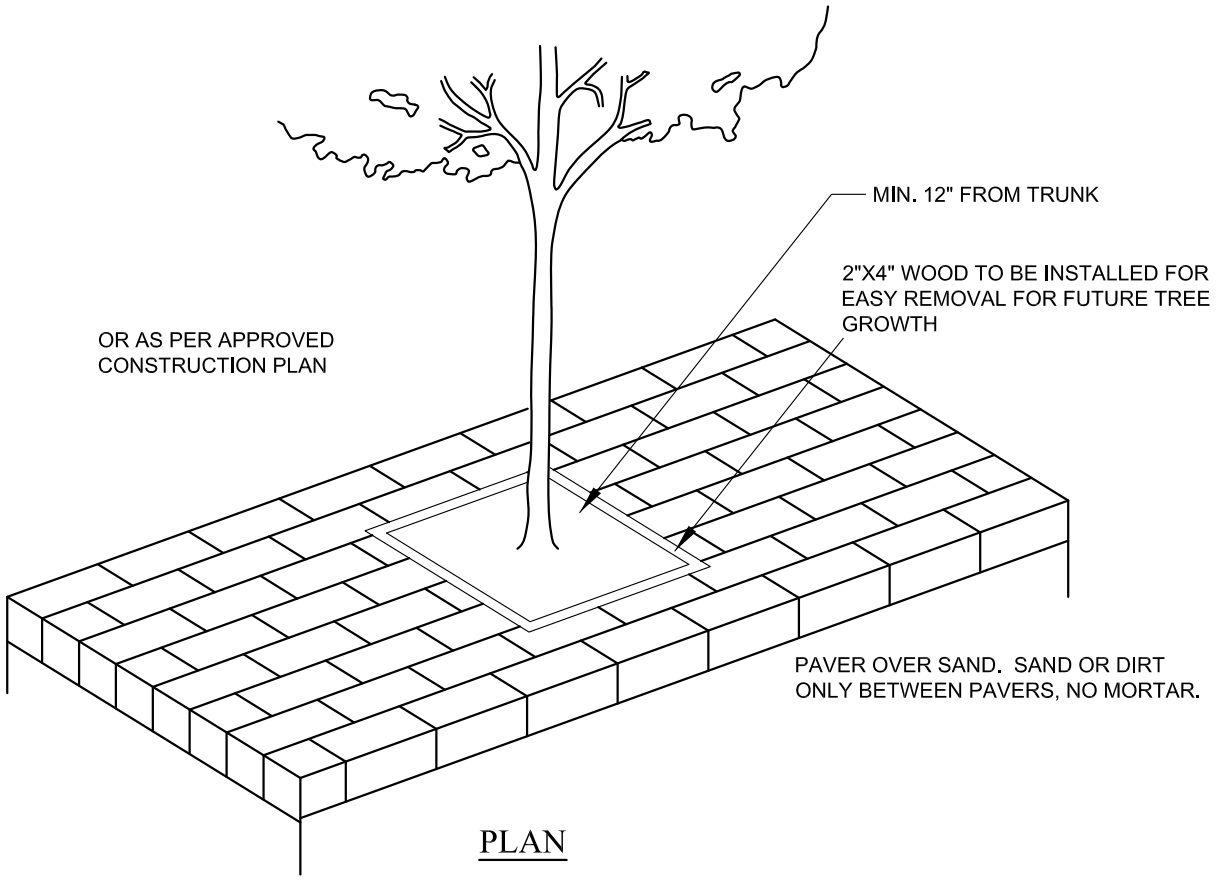

PLAN

APPROVED:

DIVISION CHIEF, TRANSPORTATION ENGINEERING AND CONSTRUCTION

DIRECTOR, DEPARTMENT OF TRANSPORTATION

CITY OF BALTIMORE
DEPARTMENT OF TRANSPORTATION
TRANSPORTATION ENGINEERING AND CONSTRUCTION

ISSUED	REVISED	REVISED
8 / 2010		

PAVERS OVER TREE PIT

STANDARD NO.
BC 704.02

SCALE : NONE

SHEET 1 OF 1

APPROVED:

DIVISION CHIEF, TRANSPORTATION ENGINEERING AND CONSTRUCTION

DIRECTOR, DEPARTMENT OF TRANSPORTATION

CITY OF BALTIMORE
DEPARTMENT OF TRANSPORTATION
TRANSPORTATION ENGINEERING AND CONSTRUCTION

TREE PIT DRAINAGE DETAILS

CONTINUOUS TREE DRAIN CONNECTION TO STORM DRAIN

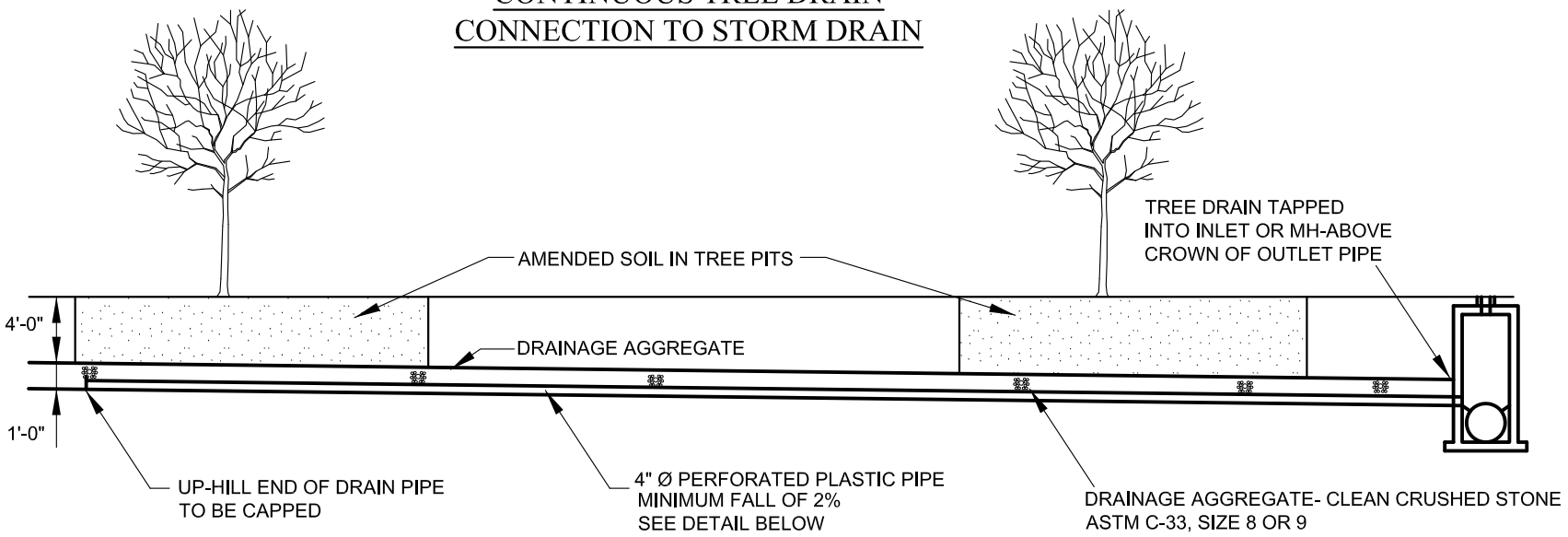

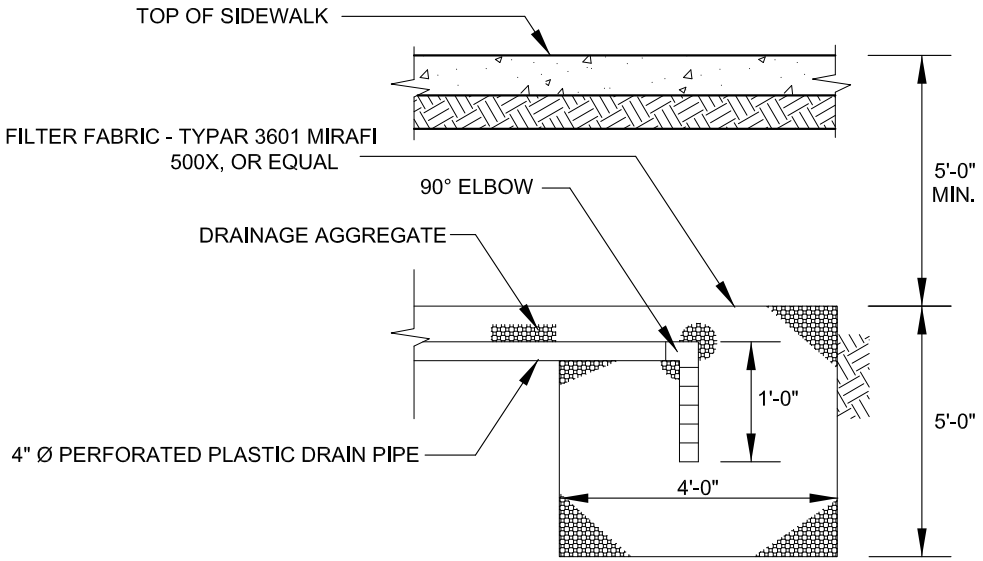

* SUMP PIT ALTERNATIVE

* MAXIMUM OF 4 TREES ALLOWED TO BE CONNECTED TO EACH SUMP PIT.

ISSUED	REVISED	REVISED
8 / 2010		

STANDARD NO.
BC 704.03

SCALE : NONE

SHEET 1 OF 1

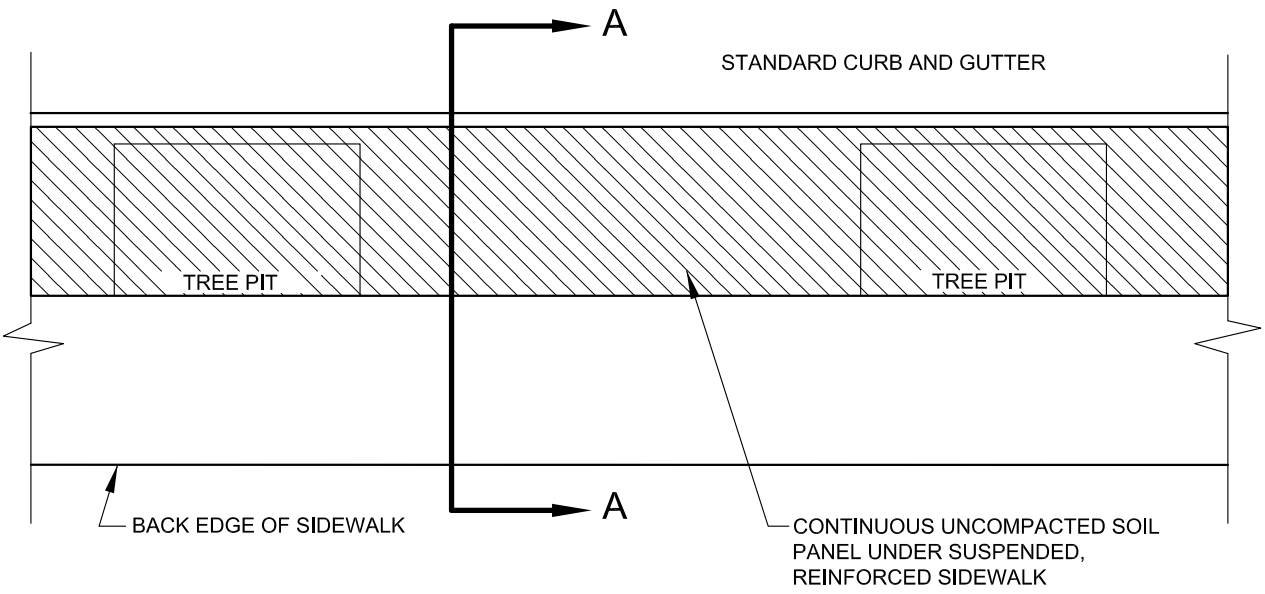

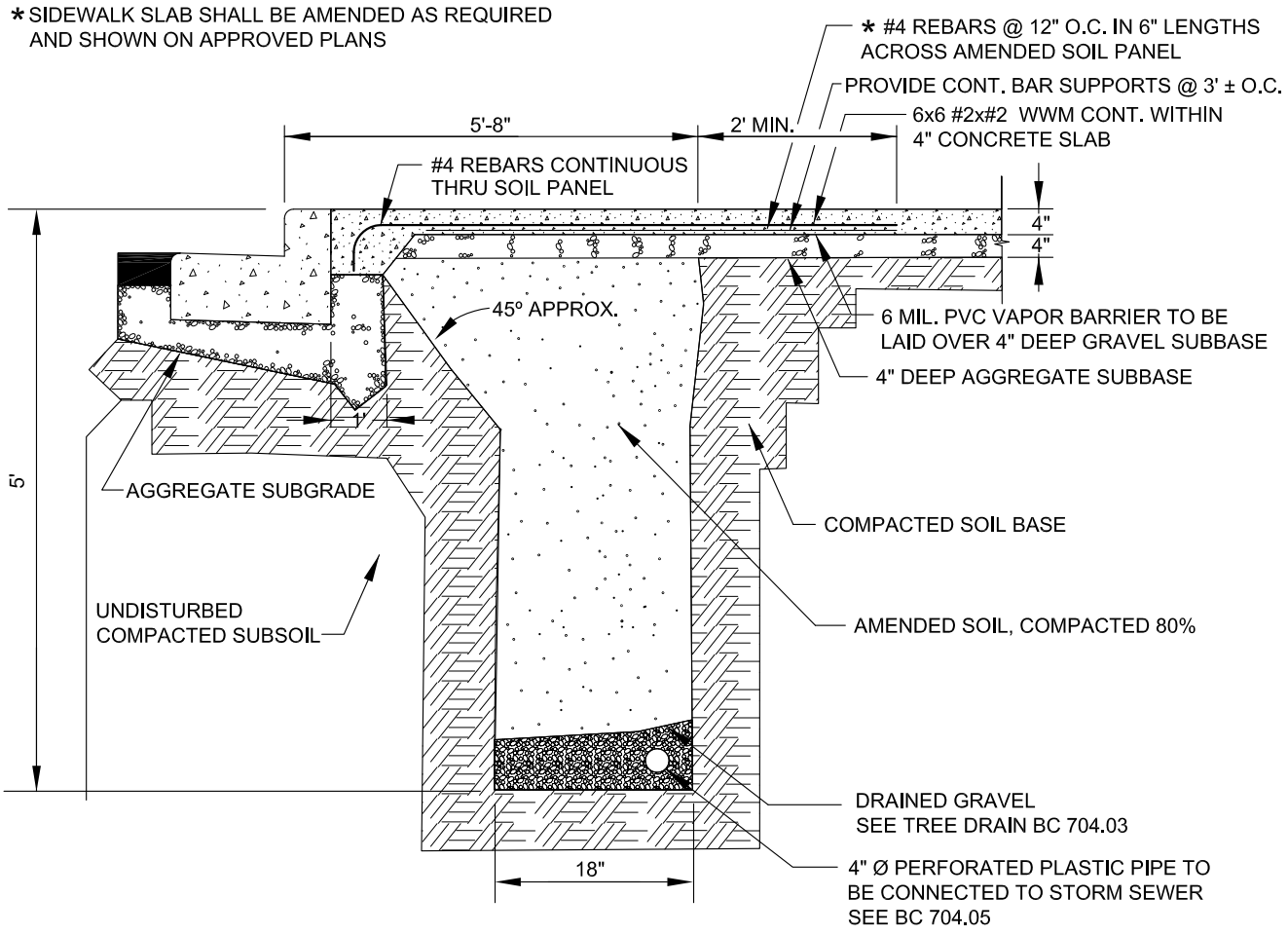

SECTION A-A

APPROVED :

DIVISION CHIEF, TRANSPORTATION ENGINEERING AND CONSTRUCTION

DIRECTOR, DEPARTMENT OF TRANSPORTATION

CITY OF BALTIMORE
DEPARTMENT OF TRANSPORTATION
TRANSPORTATION ENGINEERING AND CONSTRUCTION

ISSUED	REVISED	REVISED
8 / 2010		

CONTINUOUS SOIL PANEL UNDER SIDEWALK

STANDARD NO.
BC 704.04

SCALE : NONE

SHEET 1 OF 1

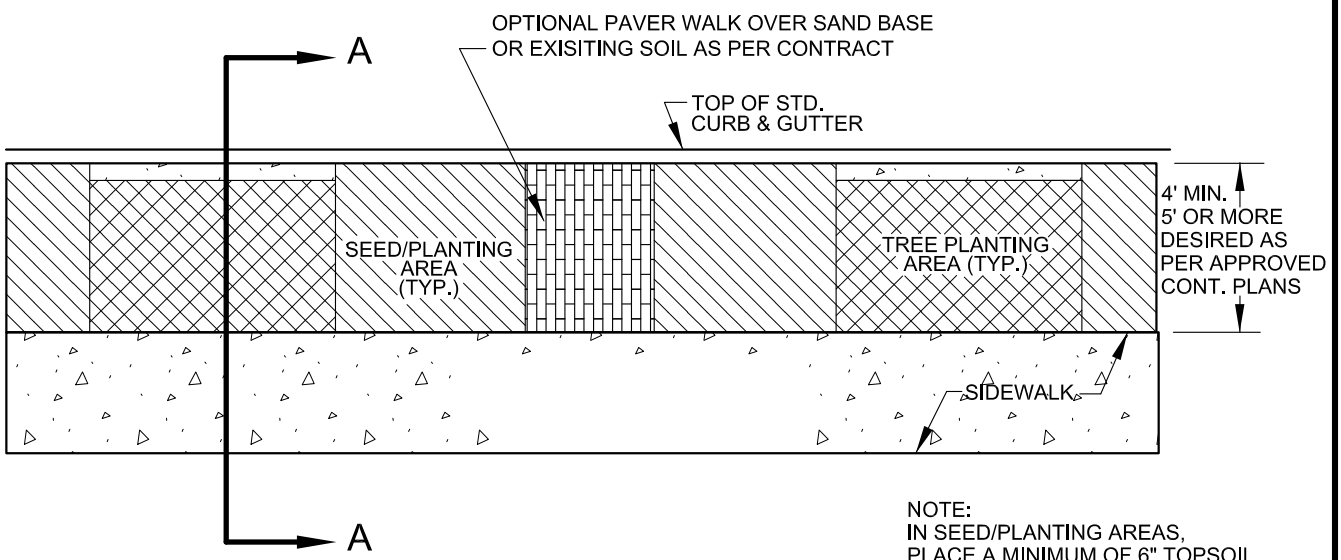

NOTE:
IN SEED/PLANTING AREAS, PLACE A MINIMUM OF 6" TOPSOIL OR PLANTING MIX OVER EXISTING SOIL. MAKE EVEN WITH SIDEWALK ELEVATION AND SEED OR PLANT ACCORDING TO CONTRACT DOCUMENTS.

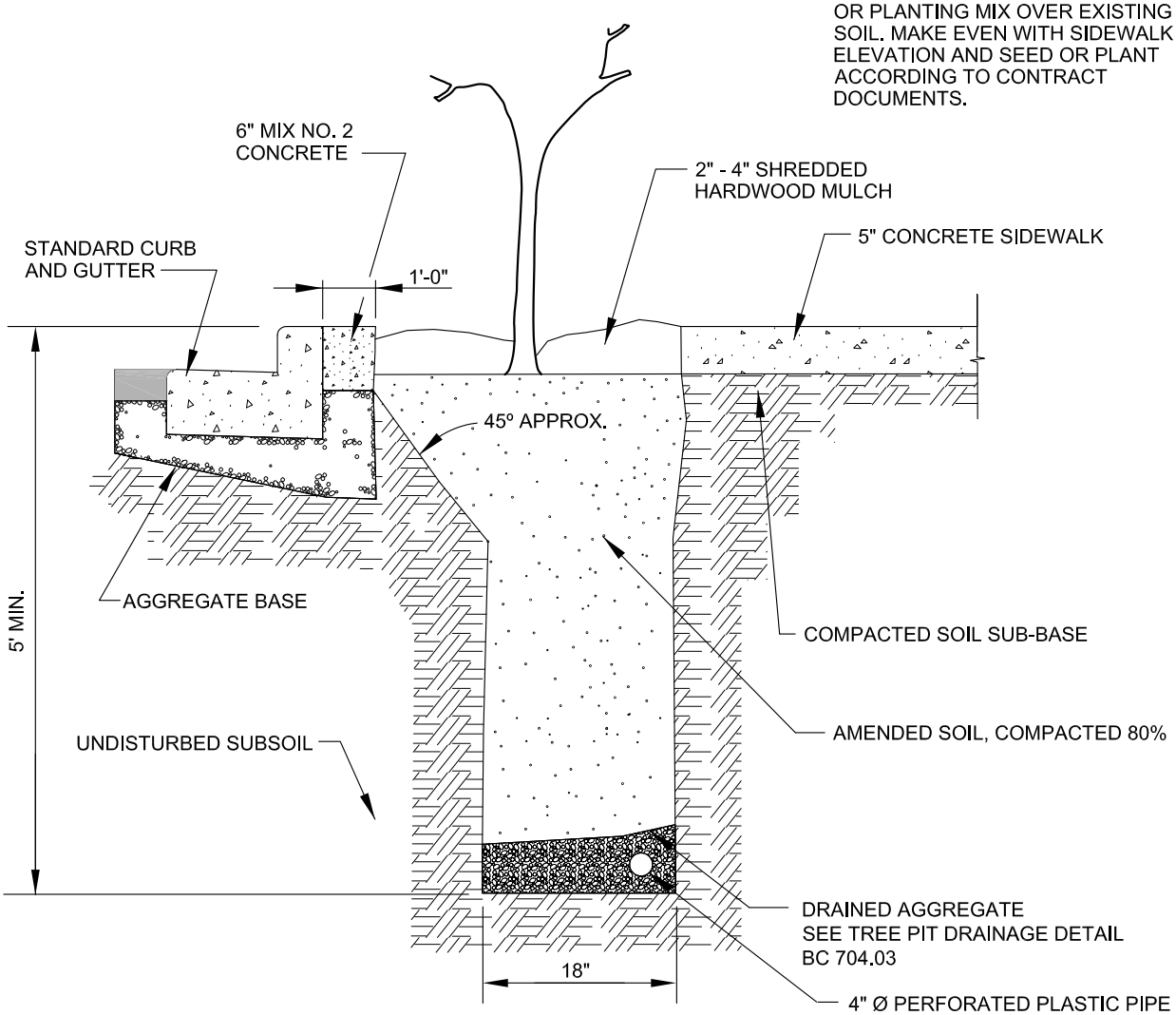

SECTION A-A

APPROVED :

DIVISION CHIEF, TRANSPORTATION ENGINEERING AND CONSTRUCTION

DIRECTOR, DEPARTMENT OF TRANSPORTATION

CITY OF BALTIMORE
DEPARTMENT OF TRANSPORTATION
TRANSPORTATION ENGINEERING AND CONSTRUCTION

ISSUED	REVISED	REVISED
8 / 2010		

CONTINUOUS PLANTING STRIP

STANDARD NO.
BC 704.05

SCALE : NONE

SHEET 1 OF 1

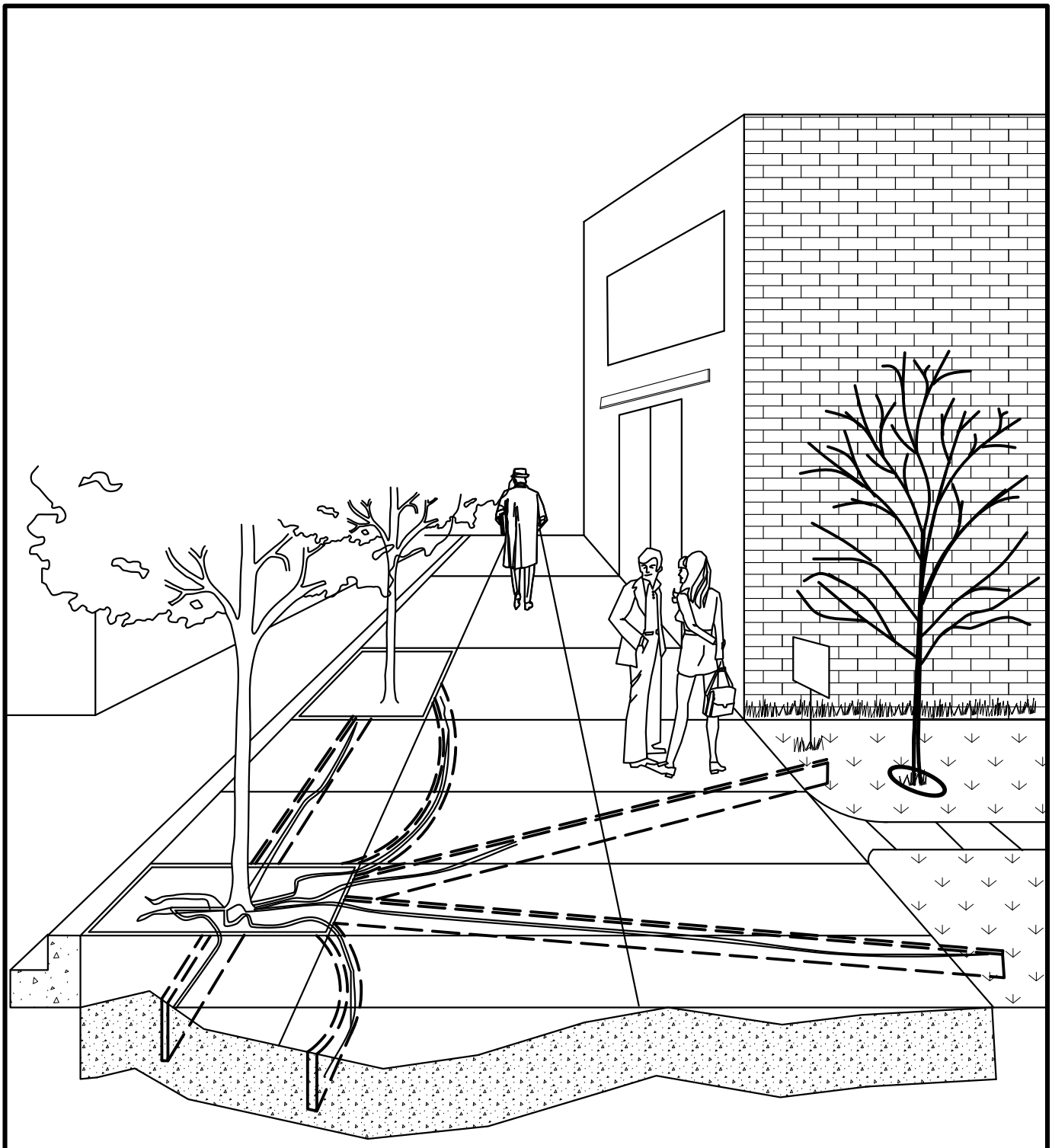

APPROVED :

DIVISION CHIEF, TRANSPORTATION ENGINEERING AND CONSTRUCTION

DIRECTOR, DEPARTMENT OF TRANSPORTATION

CITY OF BALTIMORE
DEPARTMENT OF TRANSPORTATION
TRANSPORTATION ENGINEERING AND CONSTRUCTION

ISSUED	REVISED	REVISED
8 / 2010		

ROOT PATHS PERSPECTIVE

STANDARD NO.
BC 705.01

SCALE : NONE

SHEET 1 OF 2

PLANTING BED OR LAWN TO BE MIN. 2X WIDTH OF CROSSED WALK,
E.G. ROOT PATHS UNDER 10' WIDE WALK MUST TIE INTO 20' WIDE BED OR LAWN

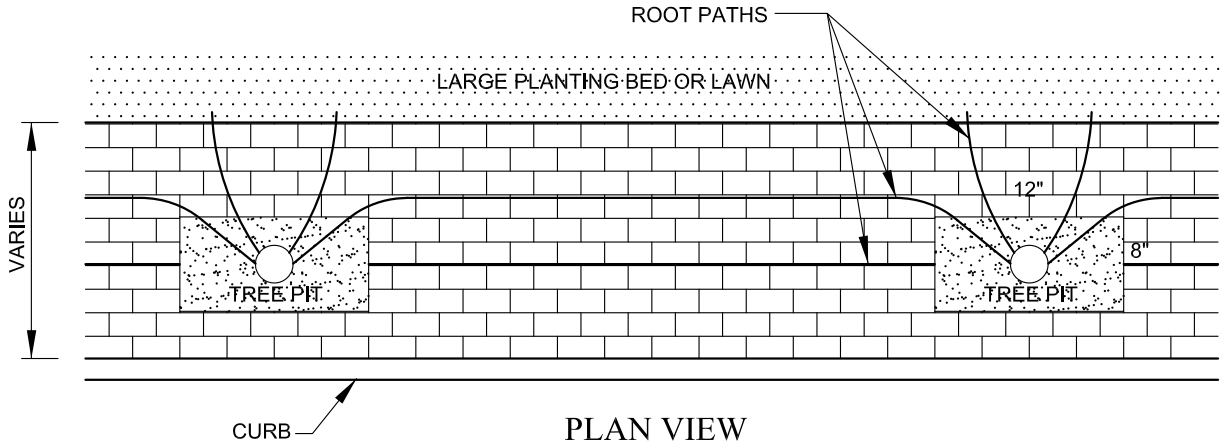

PLAN VIEW

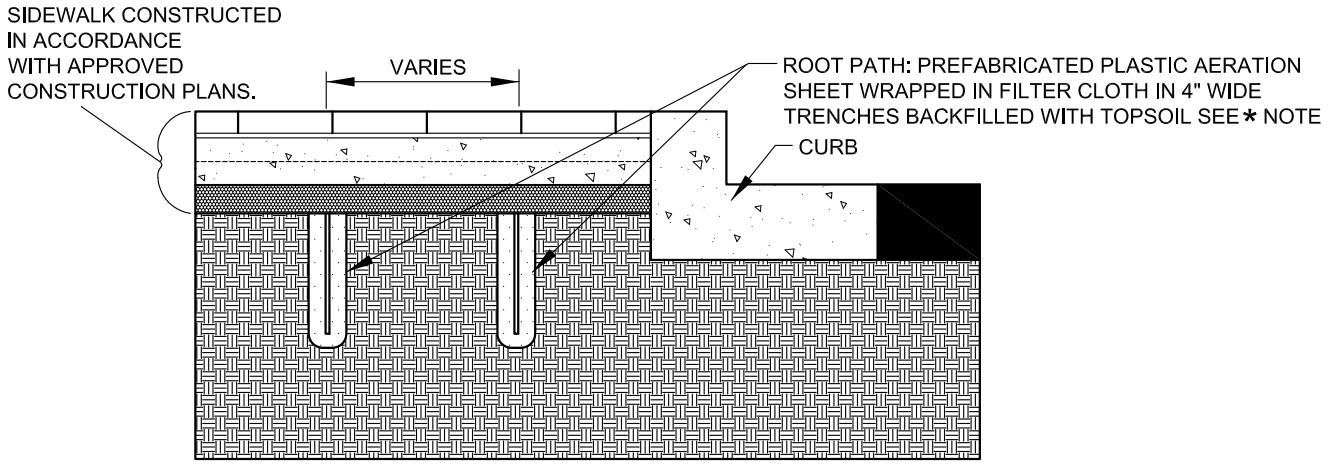

SECTION PERPENDICULAR TO CURB BETWEEN TREES

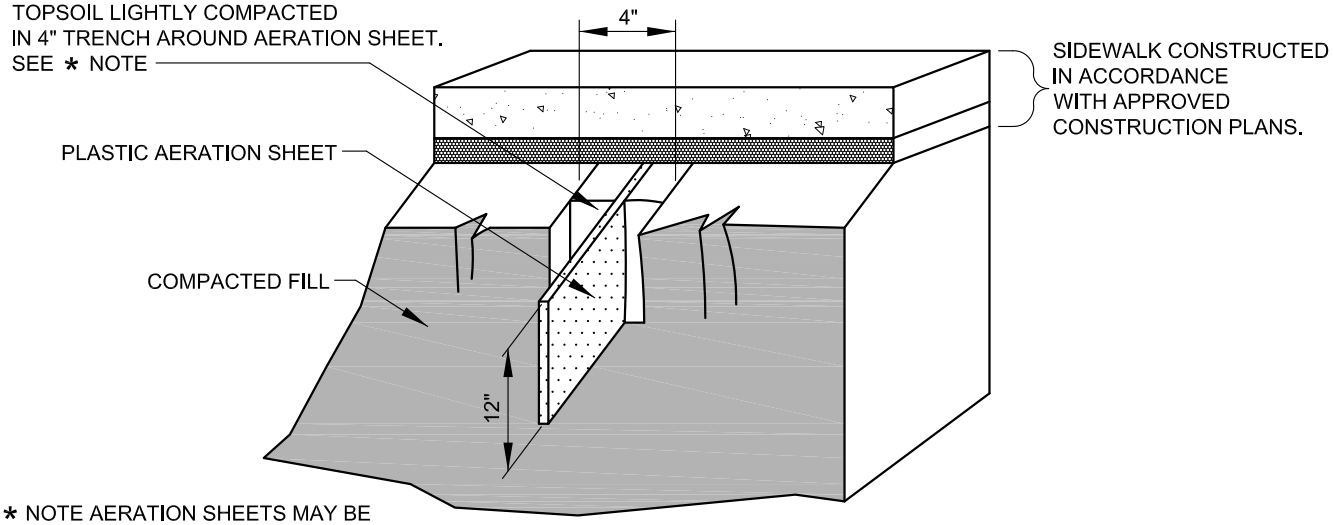

* NOTE AERATION SHEETS MAY BE
OFFSET TO EITHER SIDE OF
TRENCH FOR EASE OF INSTALLATION

CROSS SECTION

APPROVED:

DIVISION CHIEF, TRANSPORTATION ENGINEERING AND CONSTRUCTION

DIRECTOR, DEPARTMENT OF TRANSPORTATION

CITY OF BALTIMORE
DEPARTMENT OF TRANSPORTATION
TRANSPORTATION ENGINEERING AND CONSTRUCTION

ISSUED	REVISED	REVISED
8 / 2010		

ROOT PATHS DETAILS

STANDARD NO.
BC 705.02

SCALE : NONE

SHEET 1 OF 1

APPROVED:

DIVISION CHIEF, TRANSPORTATION ENGINEERING AND CONSTRUCTION

DIRECTOR, DEPARTMENT OF TRANSPORTATION

CITY OF BALTIMORE
DEPARTMENT OF TRANSPORTATION ENGINEERING AND CONSTRUCTION

TREE PIT GUARD

ISSUED	REVISED	REVISED
8 / 2010		

STANDARD NO.
BC 706.01

SCALE : NONE

SHEET 1 OF 1

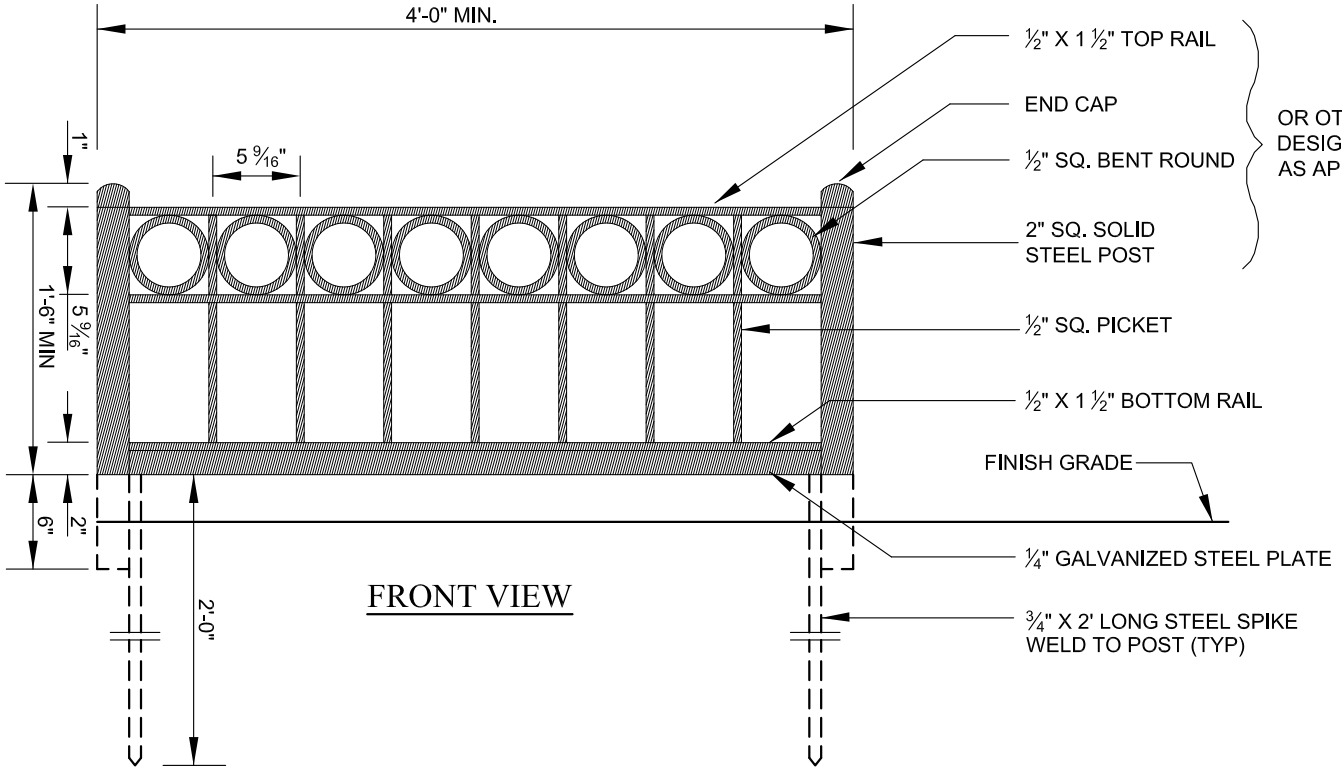

FRONT VIEW

NOTE:

1.)WHEN PIT IS ALONG A CITY STREET PLACE GUARD ON THREE SIDES ONLY WITH OPEN SIDE FACING STREET.

2.) DESIGN OF ORNAMENTAL DETAIL TO BE AS SHOWN OR OTHER DESIGN AS APPROVED BY BALTIMORE CITY.

TREE PIT GUARD

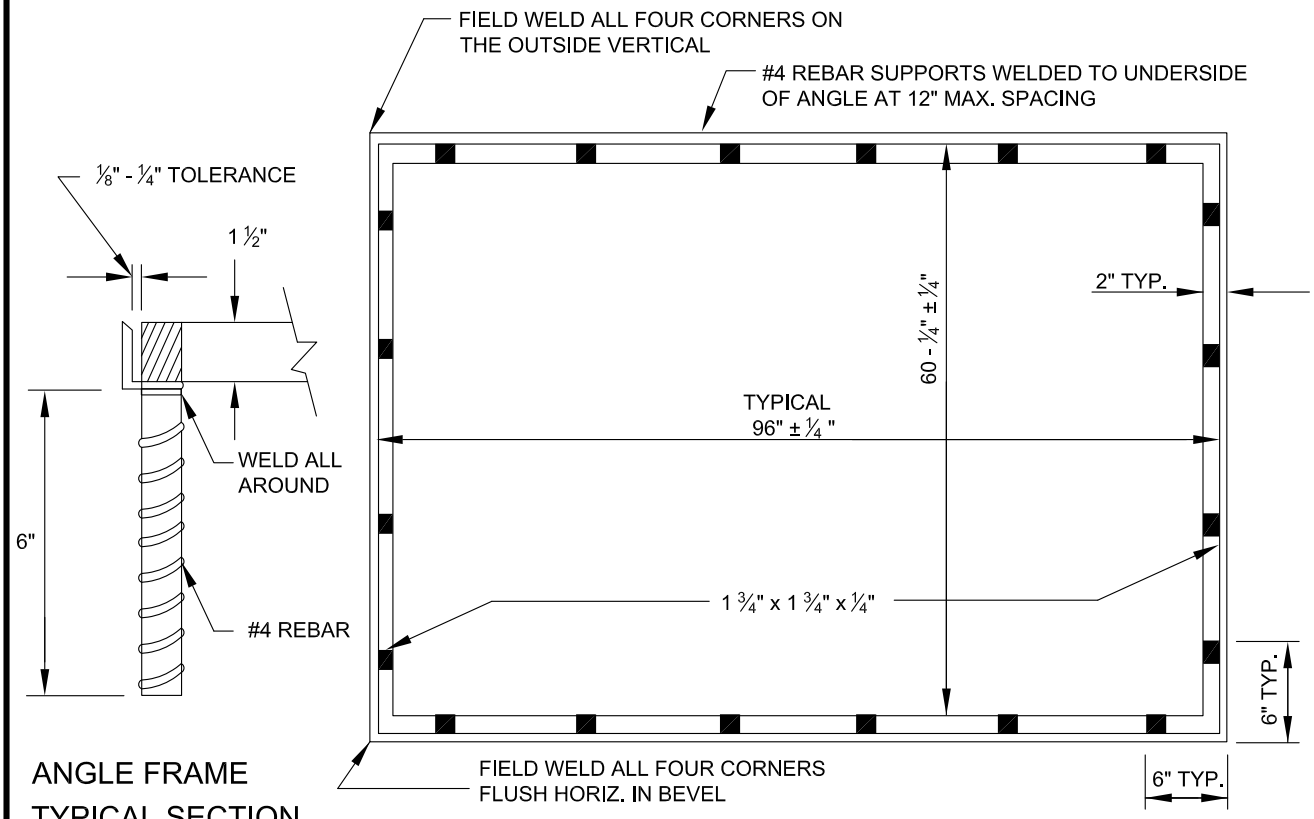

ANGLE FRAME
TYPICAL SECTION

ANGLE FRAME, PLAN

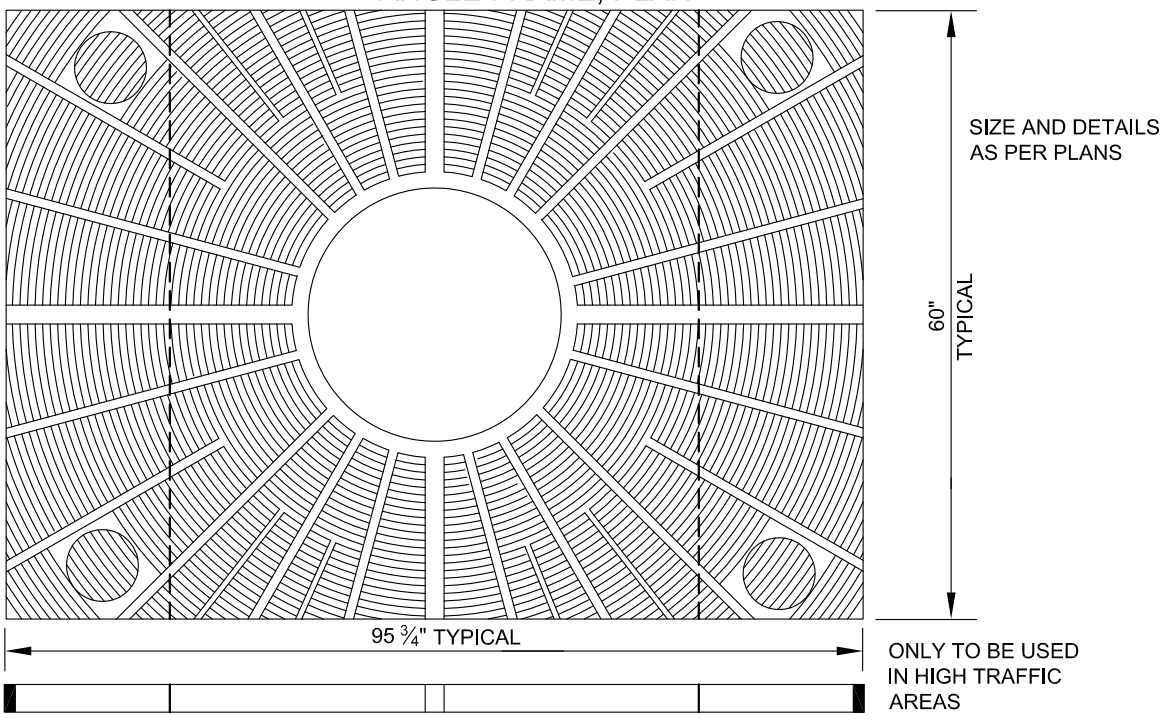

TREE GRATE, HALF PLAN AND SECTION

NOTES:

1. TREE GRATES TO BE NEENAH TYPE R-8816 180° OR EQUAL AS SPECIFIED ON APPROVED PLAN.
2. THE TREE FRAME AND GRATE SHALL BE PRIMED WITH NEENAH "RUSTIC RED" OR EQUIVALENT AND THEN COATED WITH BLACK ASPHALTIC PAINT.
3. FOR DETAILS NOT SHOWN REFER TO CORRESPONDING STANDARDS AND APPROVED CONSTRUCTION DRAWINGS.

APPROVED :

DIVISION CHIEF, TRANSPORTATION ENGINEERING AND CONSTRUCTION

DIRECTOR, DEPARTMENT OF TRANSPORTATION

CITY OF BALTIMORE
DEPARTMENT OF TRANSPORTATION
TRANSPORTATION ENGINEERING AND CONSTRUCTION

ISSUED	REVISED	REVISED
8 / 2010		

EXPANDABLE TREE GRATE AND FRAME DETAILS

STANDARD NO.
BC 706.02

SCALE : NONE

SHEET 1 OF 1

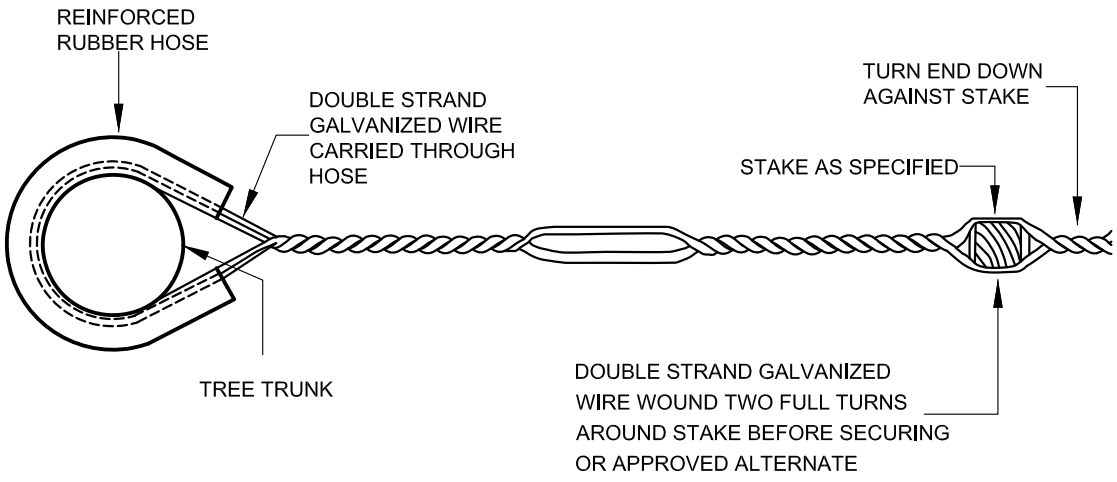

APPROVED:

DIVISION CHIEF, TRANSPORTATION ENGINEERING AND CONSTRUCTION

DIRECTOR, DEPARTMENT OF TRANSPORTATION

CITY OF BALTIMORE
DEPARTMENT OF TRANSPORTATION
TRANSPORTATION ENGINEERING AND CONSTRUCTION

FASTENER FOR TREE STAKING

ISSUED	REVISED	REVISED
8 / 2010		

STANDARD NO.
BC 710.01-1

SCALE : NONE

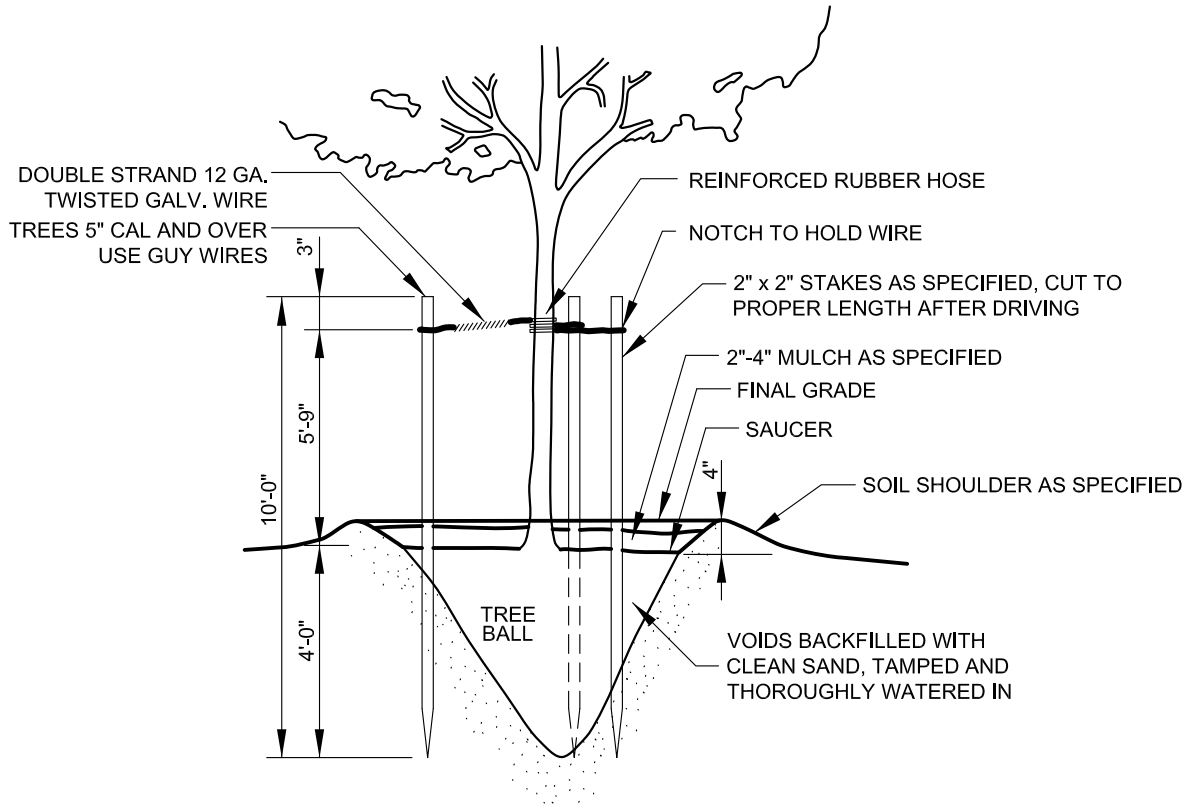

SECTION

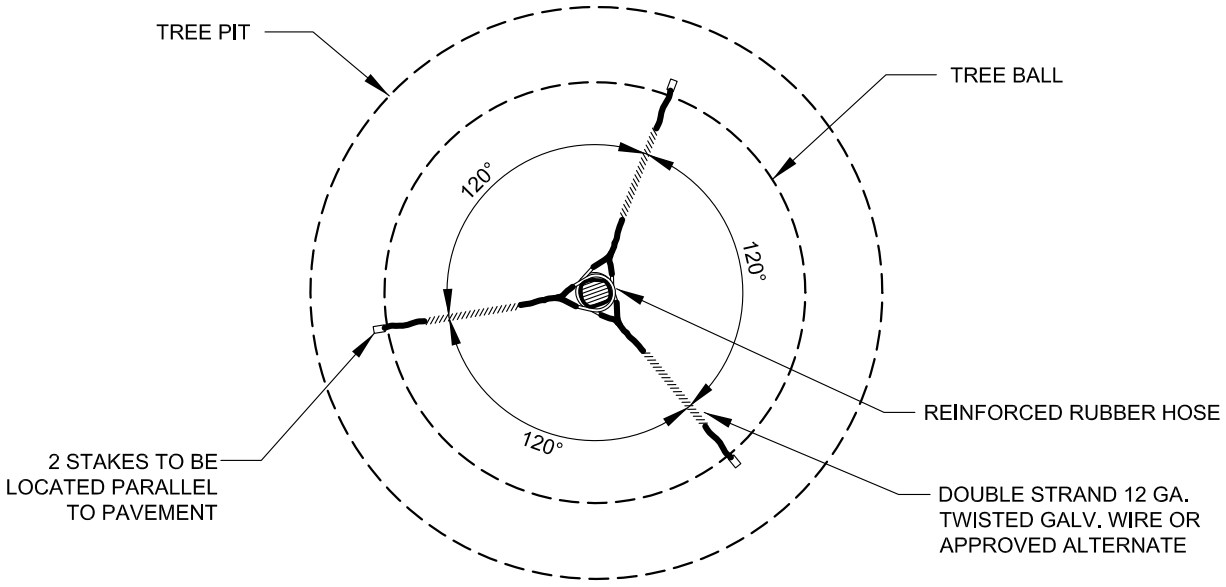

PLAN

APPROVED:

DIVISION CHIEF, TRANSPORTATION ENGINEERING AND CONSTRUCTION

DIRECTOR, DEPARTMENT OF TRANSPORTATION

CITY OF BALTIMORE
DEPARTMENT OF TRANSPORTATION
TRANSPORTATION ENGINEERING AND CONSTRUCTION

ISSUED	REVISED	REVISED
8 / 2010		

DECIDUOUS TREES TRANSPLANTED BY TREE SPADE

STANDARD NO.
BC 710.01-2

SCALE : NONE

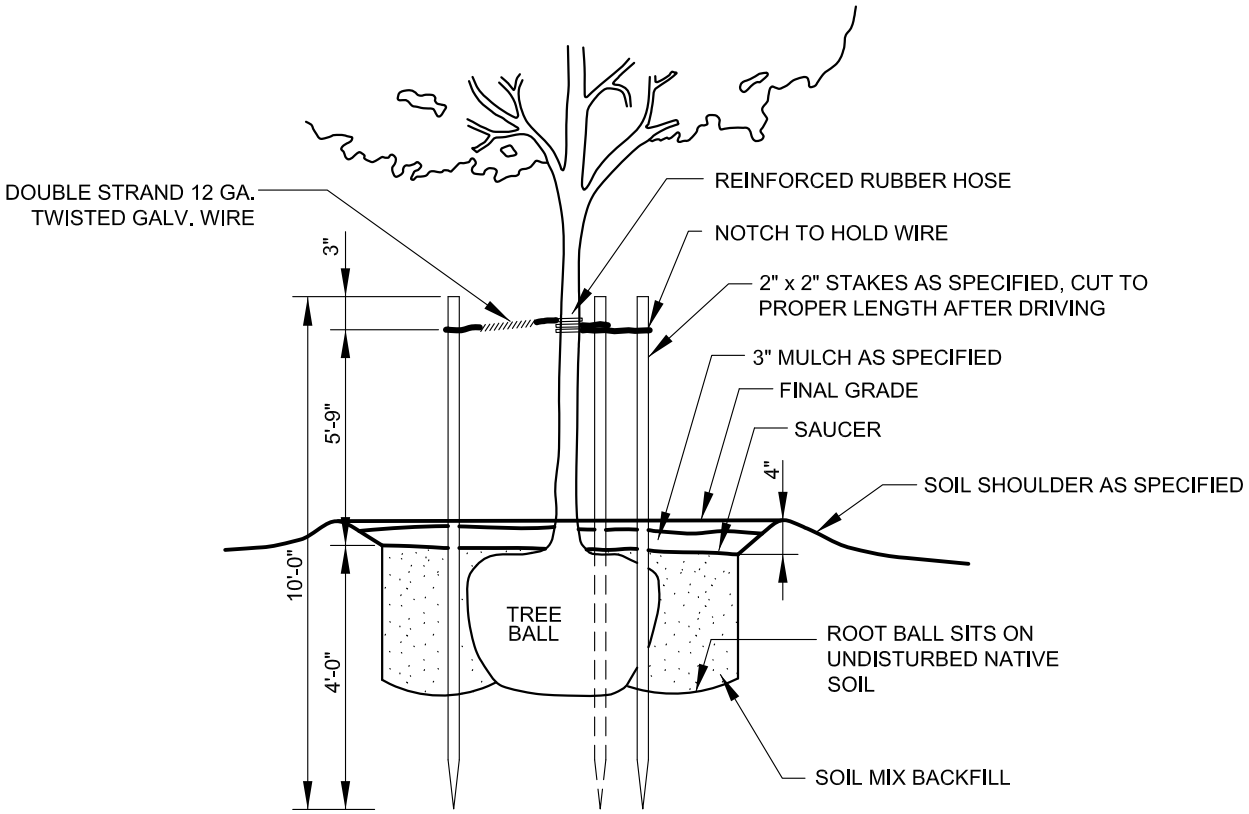

SECTION

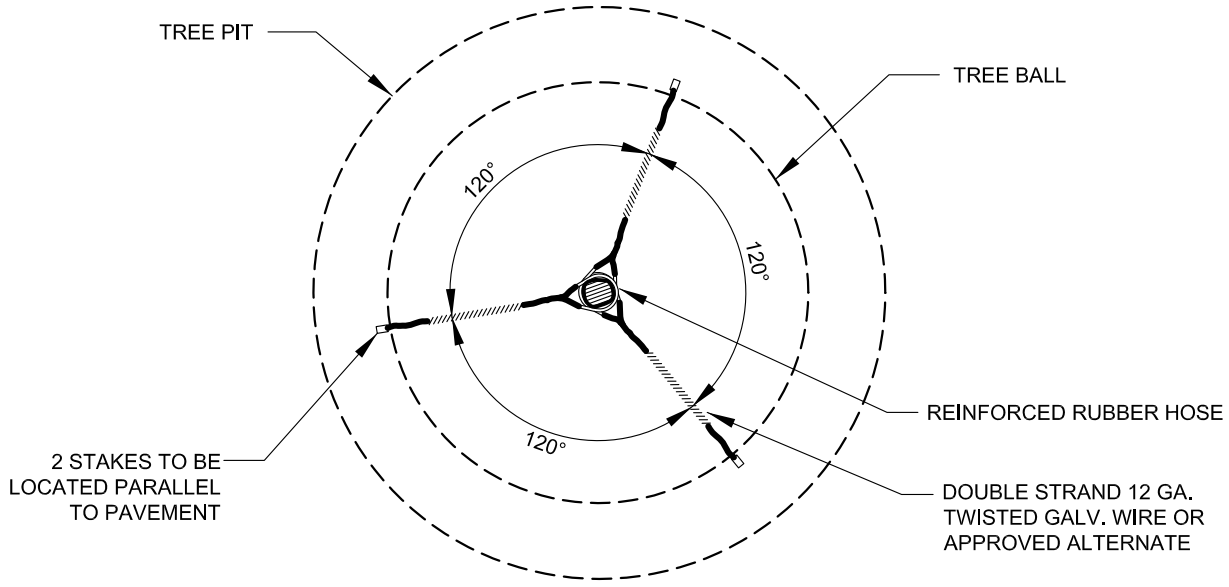

PLAN

APPROVED:

DIVISION CHIEF, TRANSPORTATION ENGINEERING AND CONSTRUCTION

DIRECTOR, DEPARTMENT OF TRANSPORTATION

CITY OF BALTIMORE
DEPARTMENT OF TRANSPORTATION
TRANSPORTATION ENGINEERING AND CONSTRUCTION

STAKING 3"-4" DECIDUOUS TREES & 10'-12' EVERGREEN TREES

ISSUED	REVISED	REVISED
8 / 2010		

STANDARD NO.
BC 710.01-3

SCALE : NONE

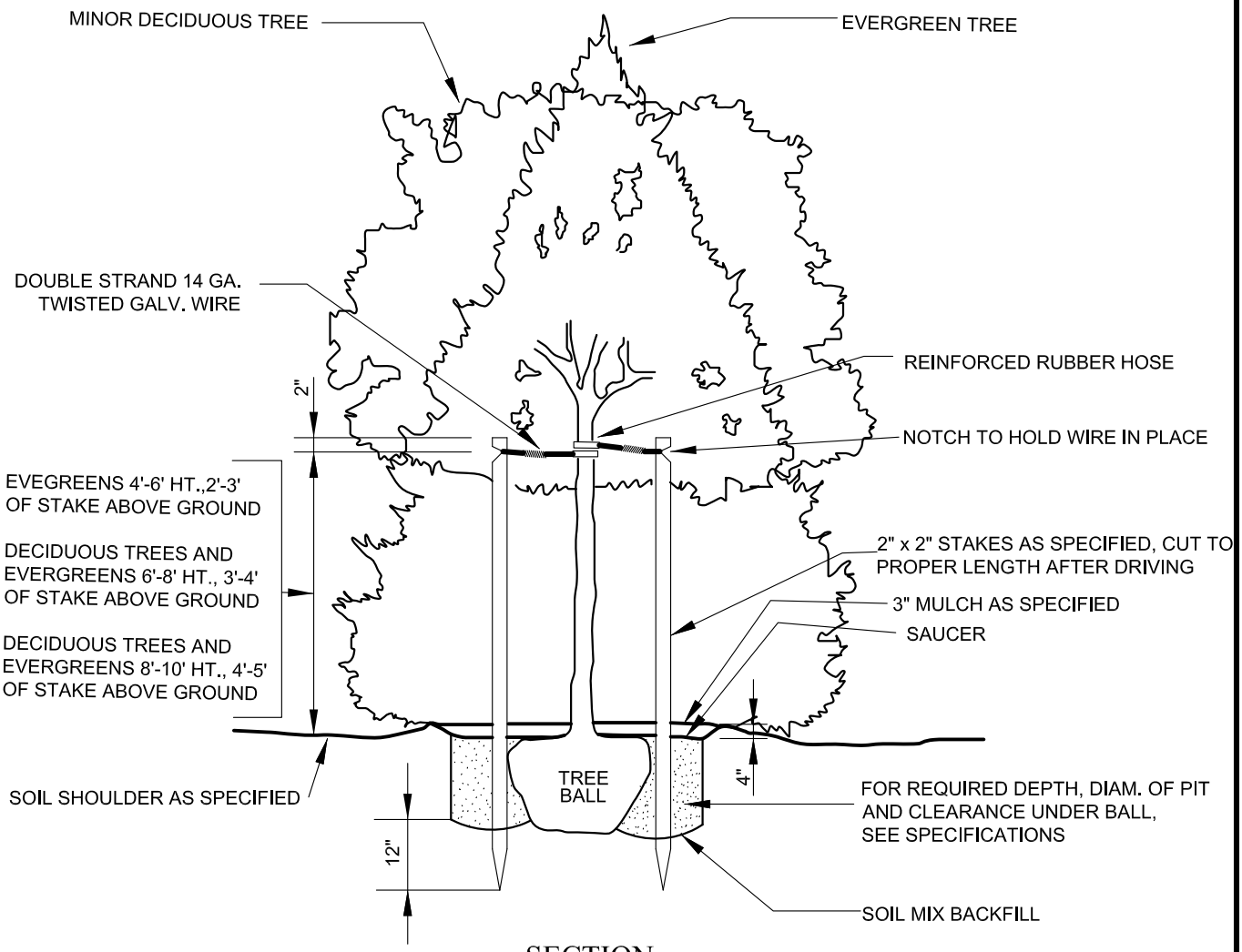

SECTION

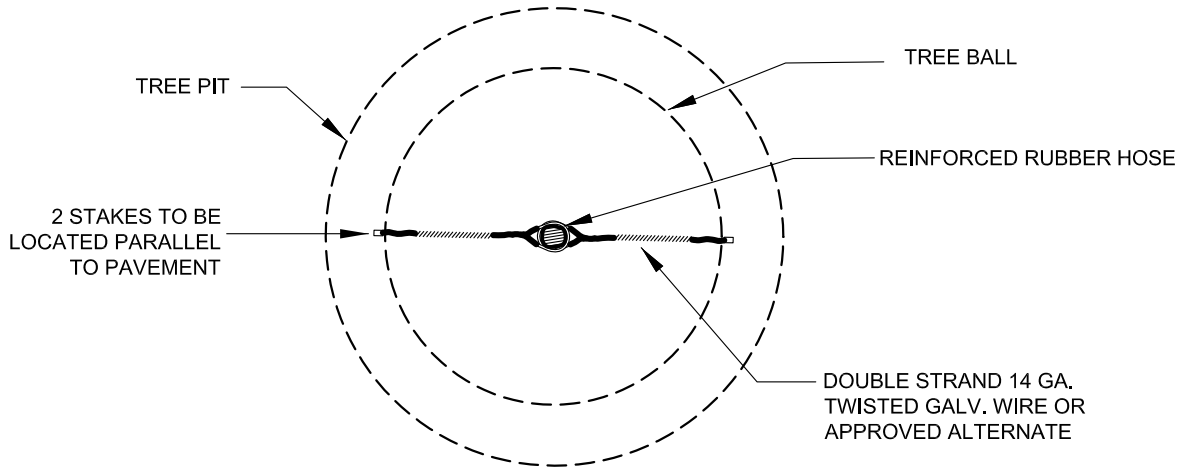

PLAN

APPROVED:

DIVISION CHIEF, TRANSPORTATION ENGINEERING AND CONSTRUCTION

DIRECTOR, DEPARTMENT OF TRANSPORTATION

CITY OF BALTIMORE
DEPARTMENT OF TRANSPORTATION
TRANSPORTATION ENGINEERING AND CONSTRUCTION

ISSUED	REVISED	REVISED
8 / 2010		

STAKING MINOR & EVERGREEN TREES TO 10' HEIGHT

STANDARD NO.
BC 710.01-4

SCALE : NONE

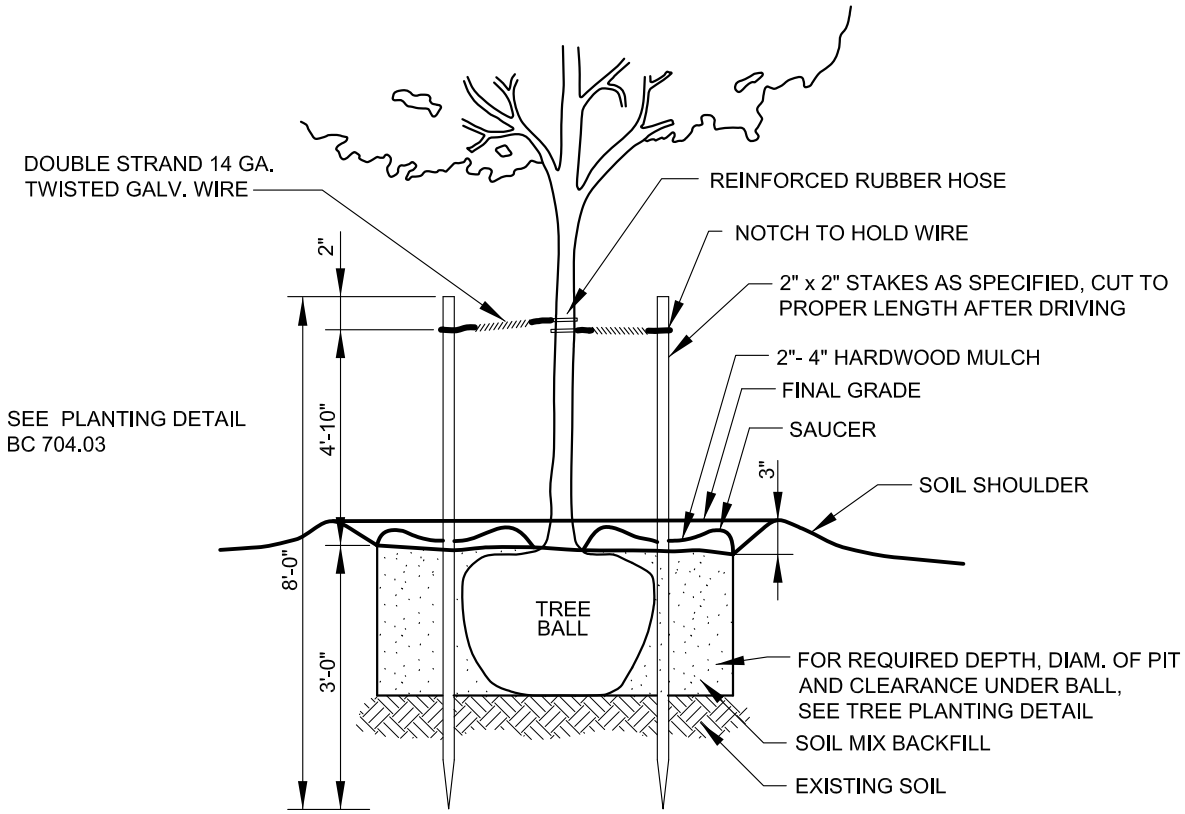

SECTION

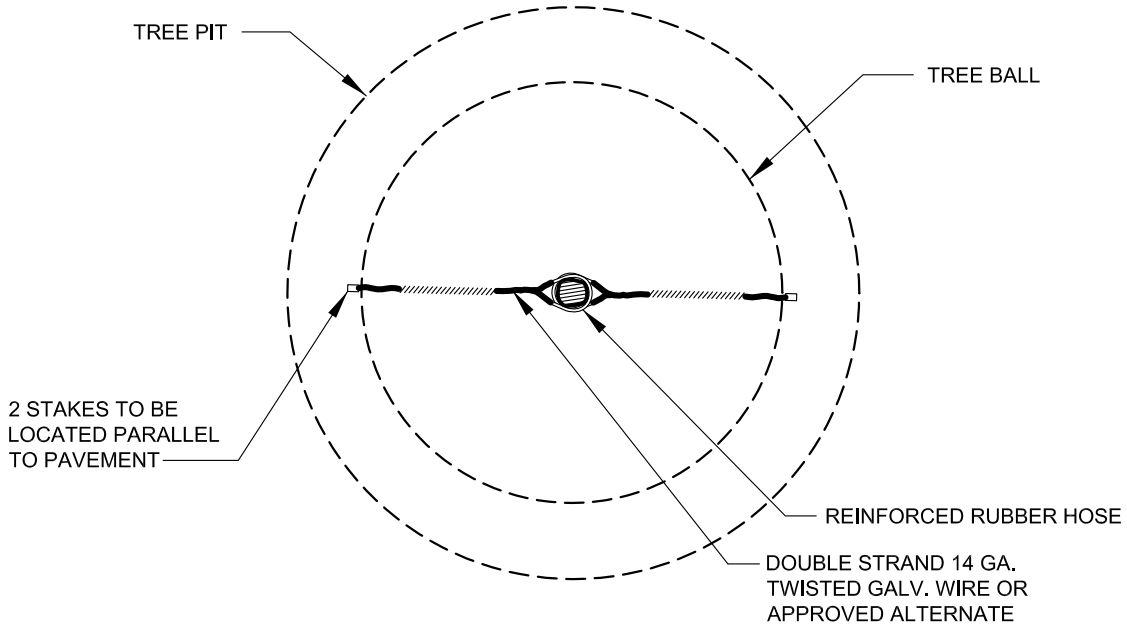

PLAN

APPROVED:

DIVISION CHIEF, TRANSPORTATION ENGINEERING AND CONSTRUCTION

DIRECTOR, DEPARTMENT OF TRANSPORTATION

CITY OF BALTIMORE
DEPARTMENT OF TRANSPORTATION
TRANSPORTATION ENGINEERING AND CONSTRUCTION

ISSUED	REVISED	REVISED
8 / 2010		

STAKING TREES UNDER 5" CALIPER

STANDARD NO.
BC 710.01-5

SCALE : NONE

SHEET 5 OF 5

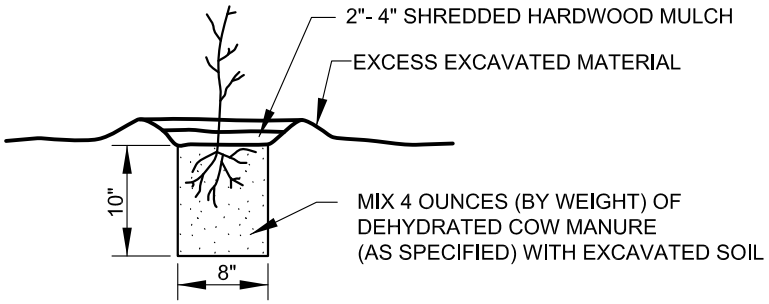

SEEDLING

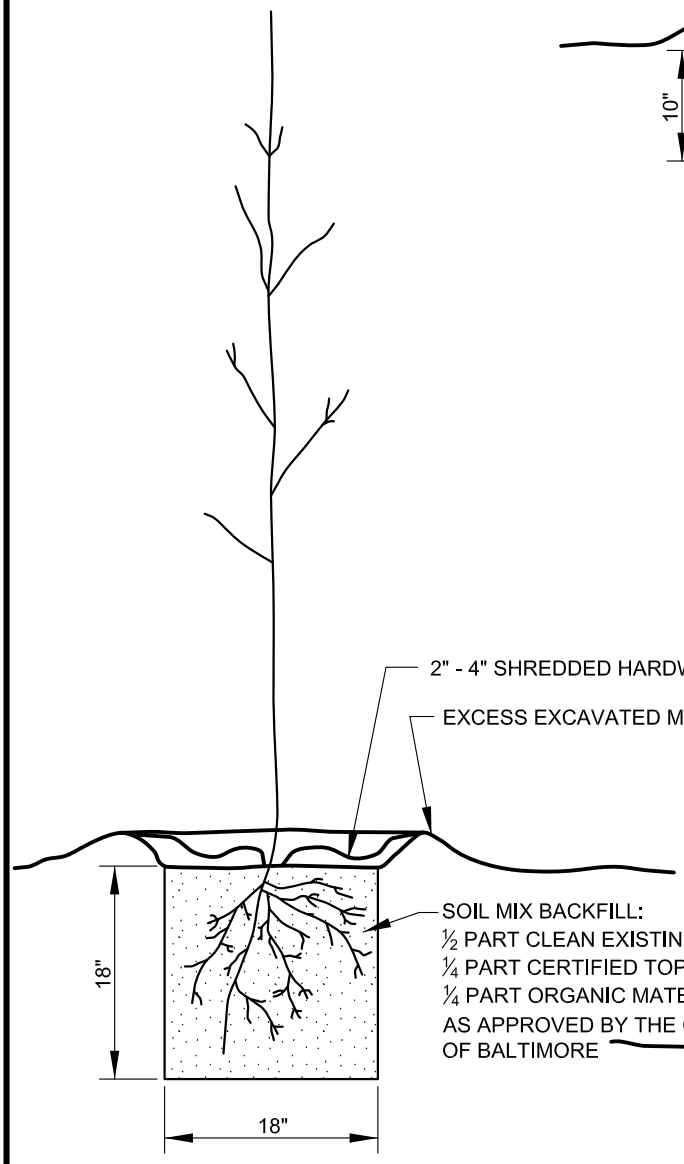

TREE WHIP

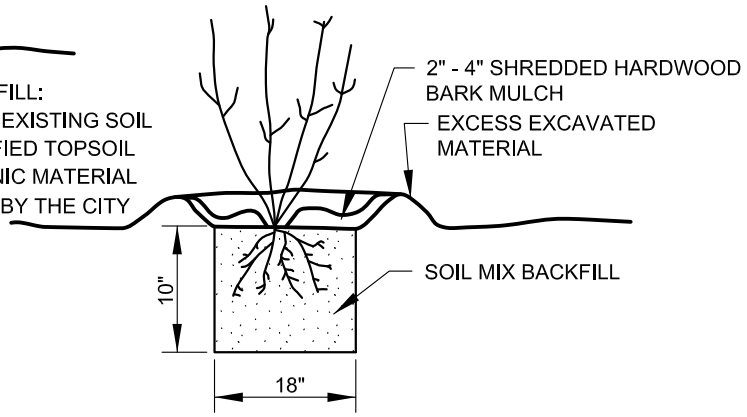

12"-18" SHRUB

APPROVED:

DIVISION CHIEF, TRANSPORTATION ENGINEERING AND CONSTRUCTION

DIRECTOR, DEPARTMENT OF TRANSPORTATION

CITY OF BALTIMORE
DEPARTMENT OF TRANSPORTATION
TRANSPORTATION ENGINEERING AND CONSTRUCTION

ISSUED	REVISED	REVISED
8 / 2010		

PLANTING
SMALL PLANTING STOCK

STANDARD NO.
BC 710.11

SCALE : NONE

SHEET 1 OF 1

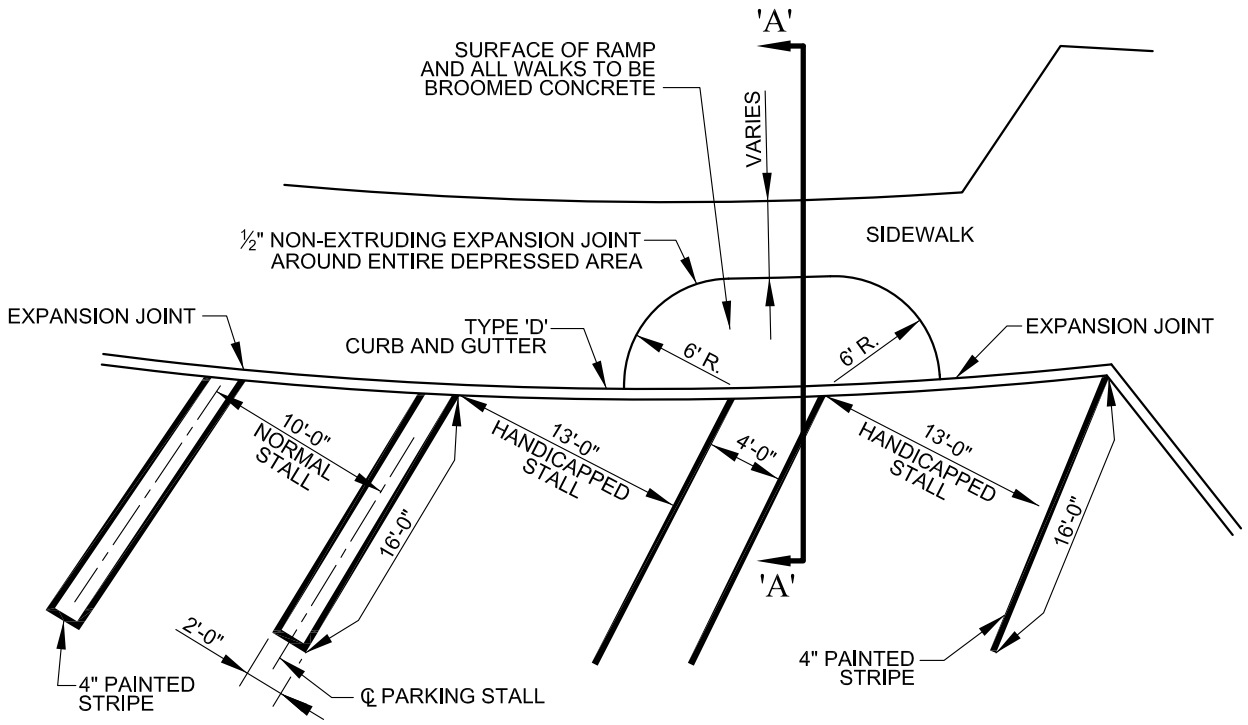

PLAN

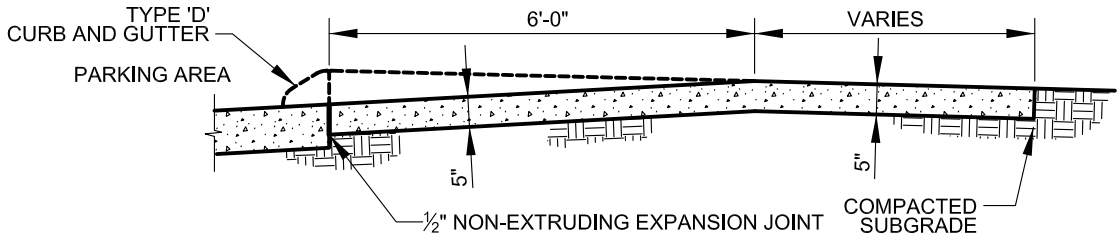

SECTION A-A

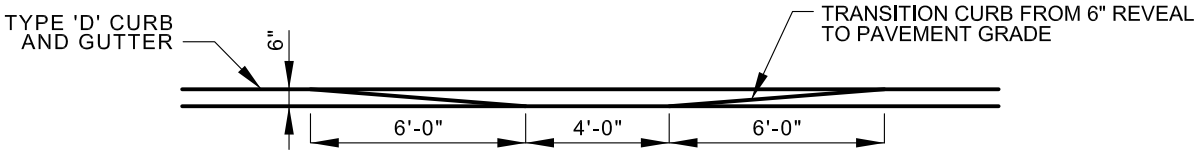

ELEVATION

APPROVED:

DIVISION CHIEF, TRANSPORTATION ENGINEERING AND CONSTRUCTION

DIRECTOR, DEPARTMENT OF TRANSPORTATION

CITY OF BALTIMORE
DEPARTMENT OF TRANSPORTATION
TRANSPORTATION ENGINEERING AND CONSTRUCTION

REST AREA PARKING FOR HANDICAPPED

ISSUED	REVISED	REVISED
8 / 2010		

STANDARD NO.
BC 710.21

SCALE : NONE

SHEET 1 OF 1

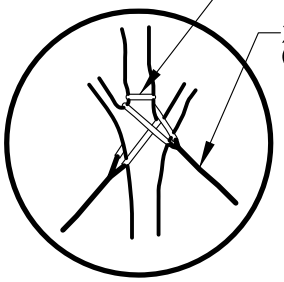

ENLARGEMENT 'A'



ENLARGEMENT 'B'

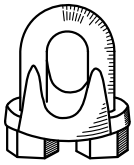

CABLE CLAMP AS SPECIFIED

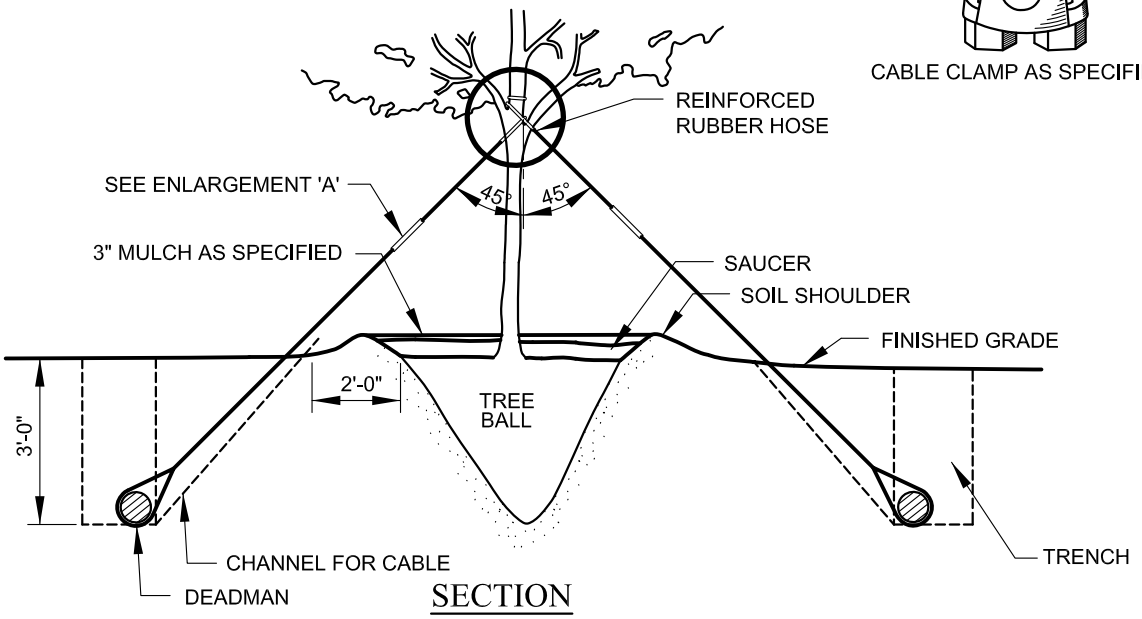

SECTION

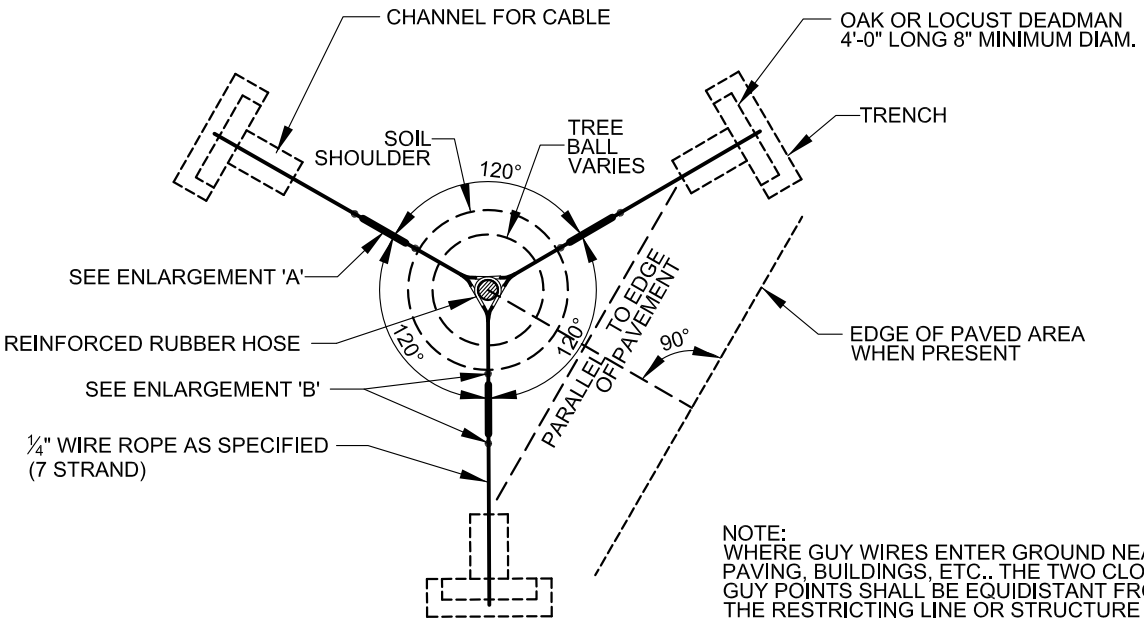

NOTE:
WHERE GUY WIRES ENTER GROUND NEAR PAVING, BUILDINGS, ETC.. THE TWO CLOSEST GUY POINTS SHALL BE EQUIDISTANT FROM THE RESTRICTING LINE OR STRUCTURE

PLAN

APPROVED:

DIVISION CHIEF, TRANSPORTATION ENGINEERING AND CONSTRUCTION

DIRECTOR, DEPARTMENT OF TRANSPORTATION

CITY OF BALTIMORE
DEPARTMENT OF TRANSPORTATION
TRANSPORTATION ENGINEERING AND CONSTRUCTION

ISSUED	REVISED	REVISED
8 / 2010		

PLANTING TREES OVER 5" CALIPER TRANSPLANTED BY MACHINE

STANDARD NO.
BC 710.31-1

SCALE : NONE

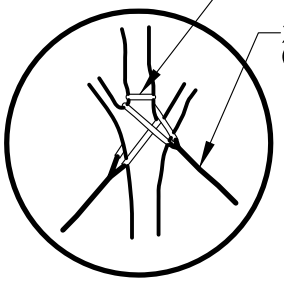

ENLARGEMENT 'A'



ENLARGEMENT 'B'

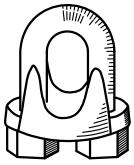

CABLE CLAMP AS SPECIFIED

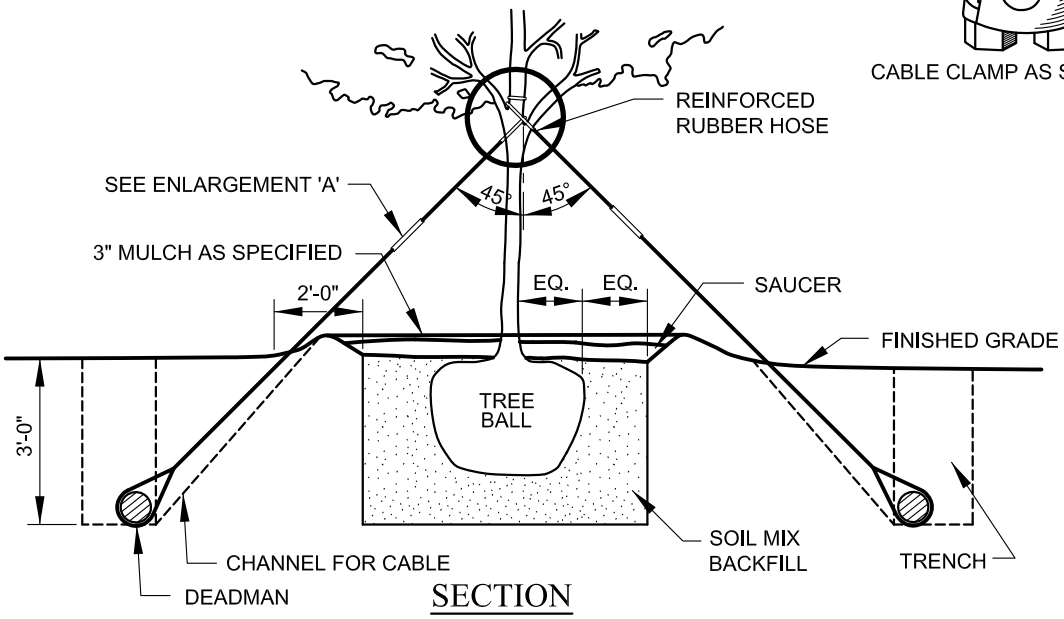

SECTION

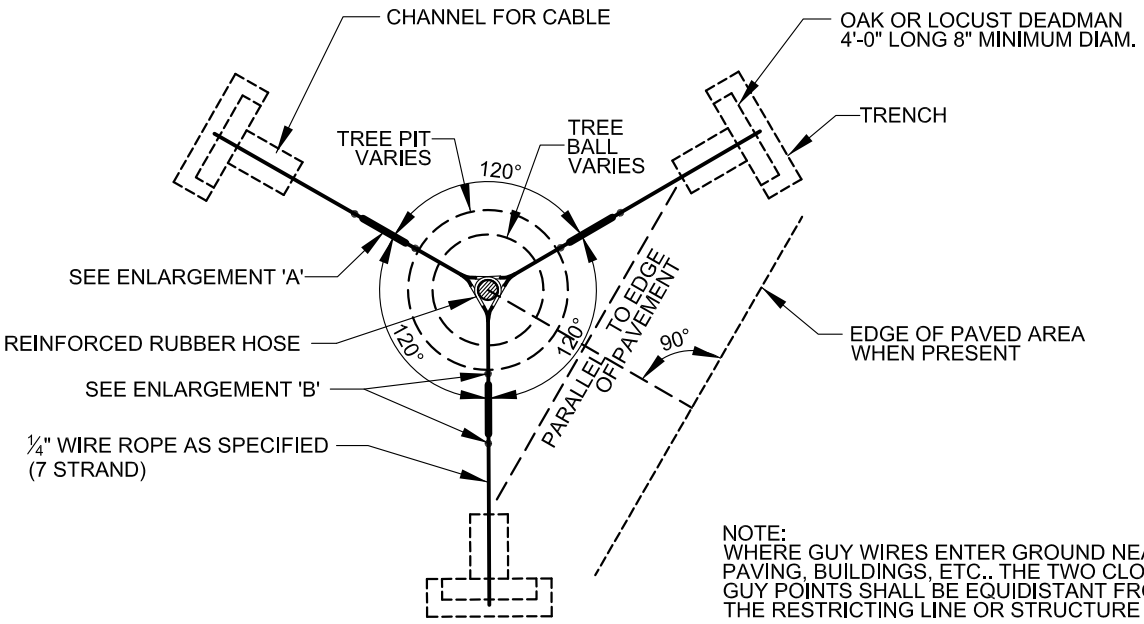

NOTE:
WHERE GUY WIRES ENTER GROUND NEAR PAVING, BUILDINGS, ETC.. THE TWO CLOSEST GUY POINTS SHALL BE EQUIDISTANT FROM THE RESTRICTING LINE OR STRUCTURE

PLAN

APPROVED:

DIVISION CHIEF, TRANSPORTATION ENGINEERING AND CONSTRUCTION

DIRECTOR, DEPARTMENT OF TRANSPORTATION

CITY OF BALTIMORE
DEPARTMENT OF TRANSPORTATION
TRANSPORTATION ENGINEERING AND CONSTRUCTION

GUYING TREES OVER 4" CALIPER

ISSUED	REVISED	REVISED
8 / 2010		

STANDARD NO.
BC 710.31-2

SCALE : NONE

SHEET 2 OF 2

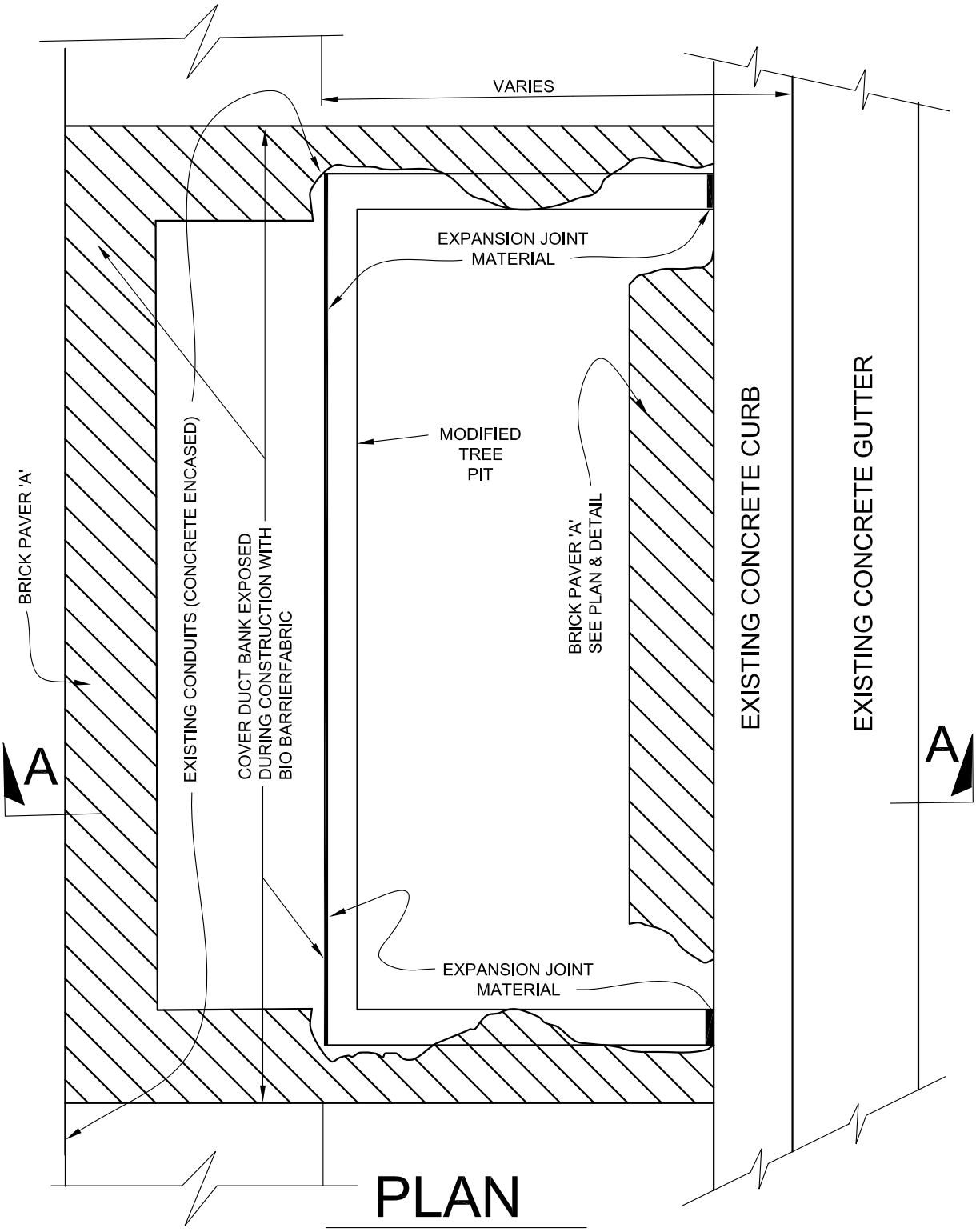

PLAN

APPROVED:

DIVISION CHIEF, TRANSPORTATION ENGINEERING AND CONSTRUCTION

DIRECTOR, DEPARTMENT OF TRANSPORTATION

CITY OF BALTIMORE
DEPARTMENT OF TRANSPORTATION
TRANSPORTATION ENGINEERING AND CONSTRUCTION

ISSUED	REVISED	REVISED
8 / 2010		

MODIFIED TREE PIT WITH TREE ROOT BARRIER

STANDARD NO.
BC 711.01-1

SCALE : NONE

SHEET 1 OF 2

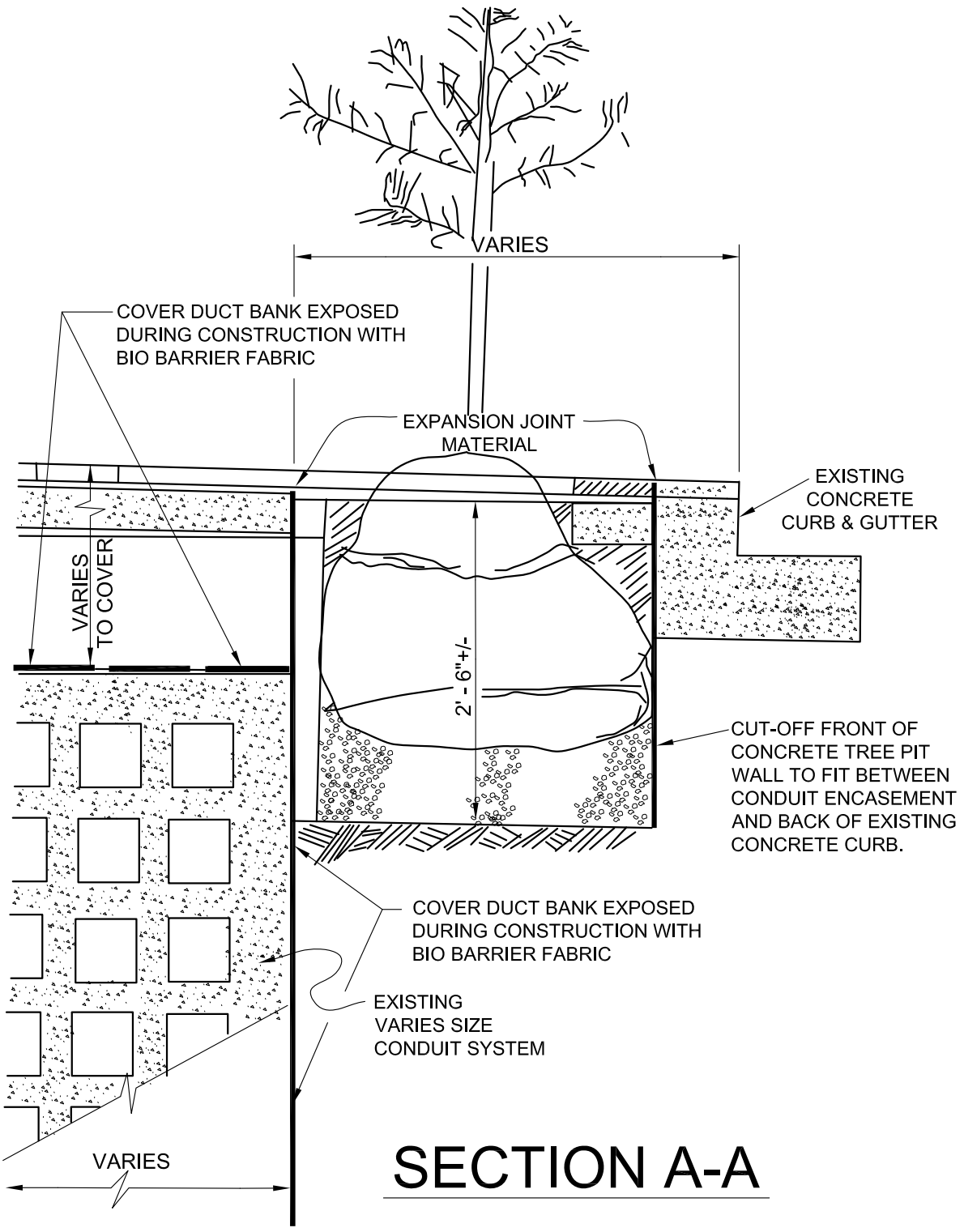

SECTION A-A

APPROVED:

DIVISION CHIEF, TRANSPORTATION ENGINEERING AND CONSTRUCTION

DIRECTOR, DEPARTMENT OF TRANSPORTATION

CITY OF BALTIMORE
DEPARTMENT OF TRANSPORTATION
TRANSPORTATION ENGINEERING AND CONSTRUCTION

ISSUED	REVISED	REVISED
8 / 2010		

MODIFIED TREE PIT
(SECTION A-A)

STANDARD NO.
BC 711.01-2

SCALE : NONE

SHEET 2 OF 2

1. SCOPE

1.1 THIS IS A MATERIALS SPECIFICATION COVERING ROOT CONTROL BARRIER IN TRENCHES, ALONGSIDE HARDSCAPE STRUCTURES SUCH AS SIDEWALKS, CURBING, PAVEMENTS, CONCRETE AND BUILDING FOUNDATIONS TO PREVENT STRUCTURAL DAMAGE DUE TO ROOT PENETRATION. THE PRODUCT FUNCTIONS TO PROVIDE BOTH A PHYSICAL AND CHEMICAL BARRIER ZONE TO RESTRICT VEGETATIVE ROOT ENCROACHMENT.

1.2 THIS IS A MATERIAL PURCHASING SPECIFICATION AND DESIGN REVIEW OF ITS USE IS RECOMMENDED.

2. REFERENCED DOCUMENTS

2.1 * ASTM STANDARDS

D-5261	TEST METHOD FOR MEASURING MASS PER UNIT ARES OF GEOTEXTILES
D-4632	TEST METHOD FOR GRAB BREAKING LOAD AND ELONGATION OF GEOTEXTILES
D-4833	TEST METHOD FOR INDEX PUNCTURE RESISTANCE OF GEOTEXTILES GEOMEMBRANES AND RELATED PRODUCTS
D-4533	TEST METHOD FOR TRAPEZOID TEER STRENGTH OF GEOTEXTILES
D-4491	TEST METHOD FOR WATER PENNEABILITY OF GEOTEXTILES BY PERMITTIVITY
D-4751	TEST METHOD FOR DETERMINING THE APPARENT OPENING SIZE OF A GEOTEXTILE
D-4355	TEST METHOD FOR DETERIORATION OF GEOTEXTILE FROM EXPOSURE TO ULTRAVIOLET LIGHT AND WATER (XENON-ACE TYPE APPARATUS)

3. PHYSICAL AND CHEMICAL REQUIREMENTS

3.1 FIBERS USED IN THE MANUFACTURE OF ROOT CONTROL BARRIER SUBSTRATE FABRIC SHALL CONSIST OF LONG CHAIN SYNTHETIC POLYOLEFINS (AT LEAST 95% BY WEIGHT) AND A UV STABILIZER. THEY SHALL BE FORMED INTO A STABLE NETWORK SUCH THAT THE FILAMENTS OR YARNS RETAIN THEIR DIMENSIONAL STABILITY RELATIVE TO EACH OTHER.

3.2 NODULES CONSISTING OF TRIFLURALIN, CARBON BLACK, AND POLYETHYLENE COMPOUNDED IN A PATENTED METHOD UTILIZING TIME-RELEASED CHARACTERISTICS ARE PERMANENTLY ATTACHED TO THE SUBSTRATE FABRIC ON 1-1/2" CENTERS BY THROUGH INJECTION MOLDING PROCESS.

3.3 ALL SUBSTRATE PROPERTY VALUES, WITH THE EXCEPTION OF APPARENT OPENING SIZE (AOS), IN THESE SPECIFICATIONS REPRESENT MINIMUM AVERAGE ROLL VALUES (MARV) IN THE WEAKEST PRINCIPAL DIRECTION (I.E., AVERAGE TEST RESULTS OF ANY ROLL IN A LOT SAMPLED FOR CONFORMED OR QUALITY ASSURANCE TESTING SHALL MEET OR EXCEED THE MINIMUM VALUES PROVIDED HEREIN). VALUES FOR AOS REPRESENT MAXIMUM AVERAGE ROLL VALUES.

3.4 PROPERTY VALUES FOR THE TRIFLURALIN ARE AVERGE RUN VALUES.

4. CERTIFICATION

4.1 THE MANUFACTURER SHALL PROVIDE TO THE ENGINEER A CERTIFICATE STATING THE NAME, PRODUCT NAME, STYLE NUMBER, CHEMICAL COMPOSITION AND OTHER PERTINENT INFORMATION TO FULLY DESCRIBE THE PRODUCT. THE MANUFACTURER IS RESPONSIBLE FOR ESTABLISHING AND MAINTAINING A QUALITY CONTROL PROGRAM TO ASSURE COMPLIANCE WITH THE REQUIREMENTS OF THE SPECIFICATION. DOCUMENTATION DESCRIBING THE QUALITY CONTROL PROGRAM SHALL BE MADE AVAILABLE UPON REQUEST.

4.2 THE MANUFACTURER'S CERTIFICATE SHALL STATE THAT THE ROOT CONTROL PRODUCT MEETS REQUIREMENTS OF THE SPECIFICATION AS EVALUATED UNDER THE MANUFACTURER'S QUALITY CONTROL PROGRAM. THE CERTIFICATE SHALL BE ATTESTED TO BY A PERSON HAVING LEGAL AUTHORITY TO BIND THE MANUFACTURER.

4.3 EITHER MISLABELING OR MISREPRESENTATION OF MATERIALS SHALL BE REASON TO REJECT THOSE PRODUCTS.

CITY OF BALTIMORE 1797	APPROVED: DIVISION CHIEF, TRANSPORTATION ENGINEERING AND CONSTRUCTION DIRECTOR, DEPARTMENT OF TRANSPORTATION	CITY OF BALTIMORE DEPARTMENT OF TRANSPORTATION TRANSPORTATION ENGINEERING AND CONSTRUCTION	ISSUED	REVISED	REVISED
			8 / 2010		
		SPECIFICATION FOR ROOT CONTROL	STANDARD NO. BC 712.01-1		
			SCALE : NONE	SHEET 1 OF 2	

5. SAMPLING, TESTING, AND ACCEPTANCE

5.1 ROOT CONTROL SUBSTRATE PRODUCT SHALL BE SUBJECT TO SAMPLING AND TESTING TO VERIFY CONFORMANCE WITH THIS SPECIFICATION. ACCEPTANCE SHALL BE BASED ON MANUFACTURER'S CERTIFICATIONS.

5.2 TESTING SHALL BE PERFORMED IN ACCORDANCE WITH THE METHODS REFERENCED IN THIS SPECIFICATION FOR THE INDICATED APPLICATION. THE NUMBER OF SPECIMENS TO TEST PER SAMPLE IS SPECIFIED BY EACH TEST METHOD.

6. SHIPMENTS AND STORAGE

6.1 PRODUCT LABELS SHALL CLEARLY SHOW THE MANUFACTURER OR SUPPLIER NAME, STYLE NUMBER, AND ROLL NUMBER AND SHALL INCLUDE A COMPLIANCE STATEMENT CERTIFYING THAT ALL INGREDIENTS AND INSPECTION STANDARDS FOR THIS PRODUCT HAVE BEEN MET.

6.2 EACH ROOT CONTROL PRODUCT ROLL SHALL BE WRAPPED WITH A PROTECTIVE EVOH BAG PLACED IN A BOX THAT WILL PROTECT THE PRODUCT FROM DAMAGE DUE TO SHIPMENT, WATER, SUNLIGHT, AND CONTAMINANTS AND TO PREVENT PREMATURE RELEASE OF HERBICIDE. THE PROTECTIVE WRAPPING SHALL BE MAINTAINED DURING PERIODS OF SHIPMENT AND STORAGE.

6.3 DURING STORAGE, ROOT CONTROL PRODUCT SHALL BE ELEVATED OFF THE GROUND AND OUT OF DIRECT SUNLIGHT. IT SHALL REMAIN SEALED IN EVOH PROTECTIVE BAG INSIDE SHIPPING BOX AT A TEMPERATURE OF NOT MORE THAN 110° F.

7. PRODUCT DESCRIPTION

OVERALL PRODUCT MAJOR COMPOSITION AND INGREDIENTS

ACTIVE CHEMICAL * : 17.5%	TRIFLURALIN (a,a,a-TRUFLURO 2,6 - dinitro - N,N, - DIPROPYL - p - toluidine)
INERT INGREDIENTS: 82.5%	100% SPUNBONDED POLYPROPYLENE, POLYETHYLENE AND CARBON

TYPICAL VALUES

TRIFLURALIN CHARACTERISTICS METHOD	ENGLISH	METRIC	TEST
VAPOR PRESSURE (mm Hg @ 25°C)	1x10-4	1x10-4	EPA CG 1600
SOLUBILITY IN WATER (ppm @ 25°C)	<0.3	<0.3	EPA CG 1500

MINIMUM VALUES

FABRIC PROPERTIES	ENGLISH	METRIC	TEST METHOD *
UNIT WEIGHT	3.9 oz/yd	130 g/m^2	ASTM D-5261
GRAB TENSILE STRENGTH	130 lbs.	575 N	ASTM D-4632
ELONGATION AT BREAK	60%	60%	ASTM D-4632
PUNCTURE STRENGTH	40lbs.	175 N.	ASTM D-4833
TRAP TEAR	60lbs.	265 N	ASTM D-4533
PRIMITIVITY	0.7 sec.	0.7 sec.	ASTM D-4491
AOS (MAS VALUE)	0.21 mm	0.21 mm	ASTM D-4751
ULTRAVIOLET STABILITY	70% @ 500 hrs	70% @ 500 hrs	ASTM D-4355

* TEST METHODS OR REVISIONS NUMBERS AVAILABLE ON REQUEST (17.5% AVERAGE TRIFLURALIN IN TOTAL COMPOSITE, MIN. OF 20% TRIFLURALIN IN NODULES)
AVAILABLE FROM ASTM, 1916 RACE STREET, PHILADELPHIA, PA

CITY OF BALTIMORE 1797	APPROVED: DIVISION CHIEF, TRANSPORTATION ENGINEERING AND CONSTRUCTION; DIRECTOR, DEPARTMENT OF TRANSPORTATION	CITY OF BALTIMORE DEPARTMENT OF TRANSPORTATION TRANSPORTATION ENGINEERING AND CONSTRUCTION	ISSUED	REVISED	REVISED
			8 / 2010		
		SPECIFICATION FOR ROOT CONTROL (CONT.)	STANDARD NO. BC 712.01-2		
			SCALE : NONE	SHEET 2 OF 2	

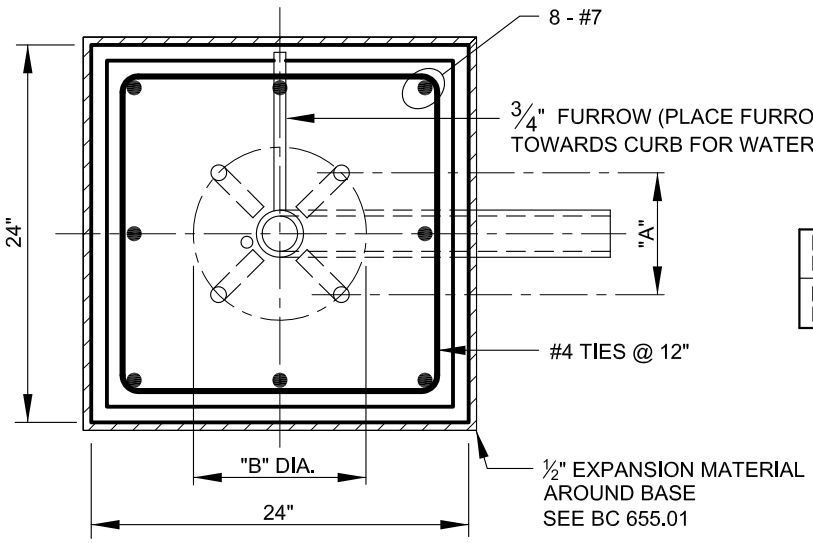

	"A" BOLT SPACE	"B" BOLT CIRCLE DIA.
BUIT IN BALLAST	7 ¾"	11"
REMOTE BALLAST	10 ⅝"	15"

REINFORCING: 7' BASE MUST HAVE 8 - #7 BAR (ONE EACH CORNER) AND 8 - #4 TIES AT 12" C/C

9' BASE MUST HAVE 8 - #7 BAR (ONE EACH CORNER) AND 10 - #4 TIES AT 12" C/C

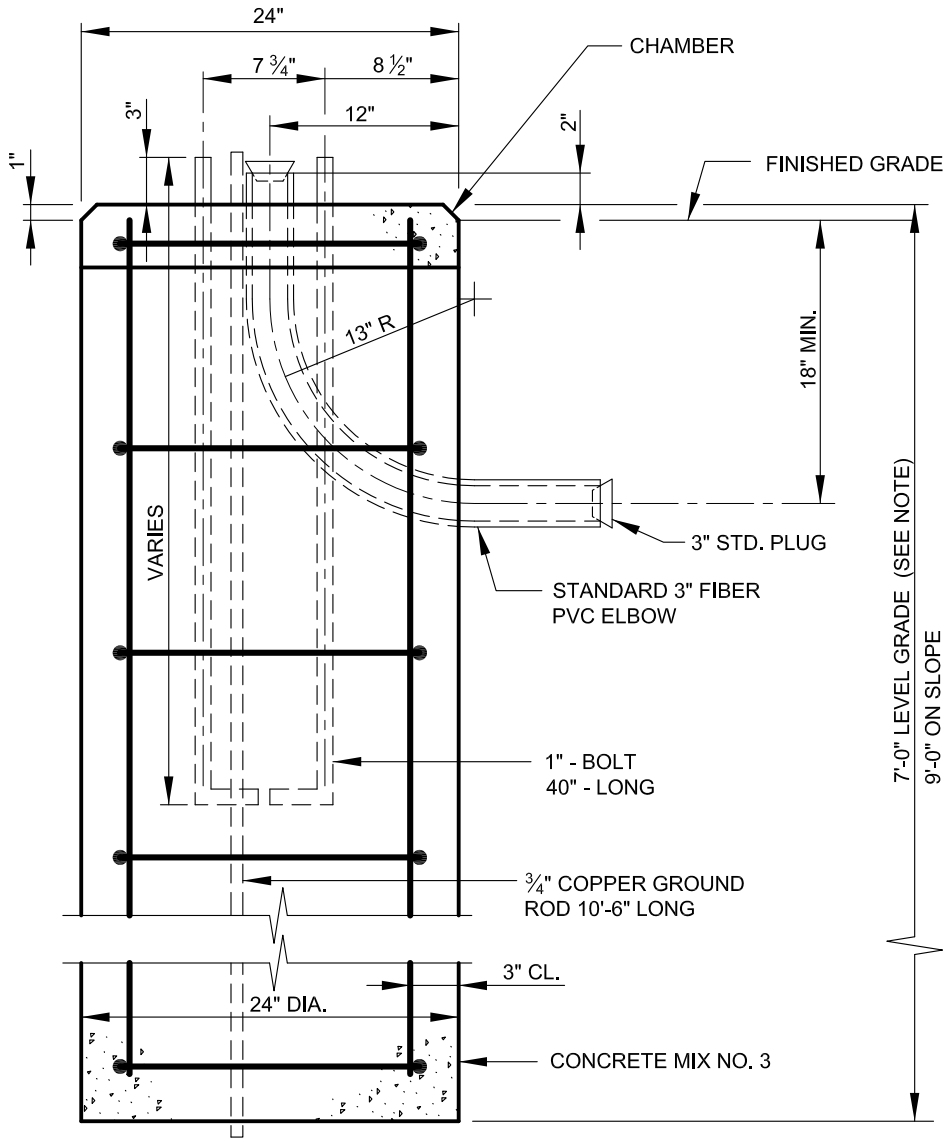

NOTE: 7' BASE FOR MAST ARMS UP TO 15'

9' BASE FOR MAST ARMS 15' AND LONGER

NOTE: POLE TO BE 2'-6" BACK FROM FACE OF CURB UNLESS OTHERWISE NOTED

APPROVED:

DIVISION CHIEF, TRANSPORTATION ENGINEERING AND CONSTRUCTION

DIRECTOR, DEPARTMENT OF TRANSPORTATION

CITY OF BALTIMORE
DEPARTMENT OF TRANSPORTATION
TRANSPORTATION ENGINEERING AND CONSTRUCTION

ROADWAY PEDESTAL BASE FOR LIGHT POLES - SQUARE

ISSUED	REVISED	REVISED
8 / 2010		

STANDARD NO.
BC 801.02

SCALE : NONE

SHEET 1 OF 1

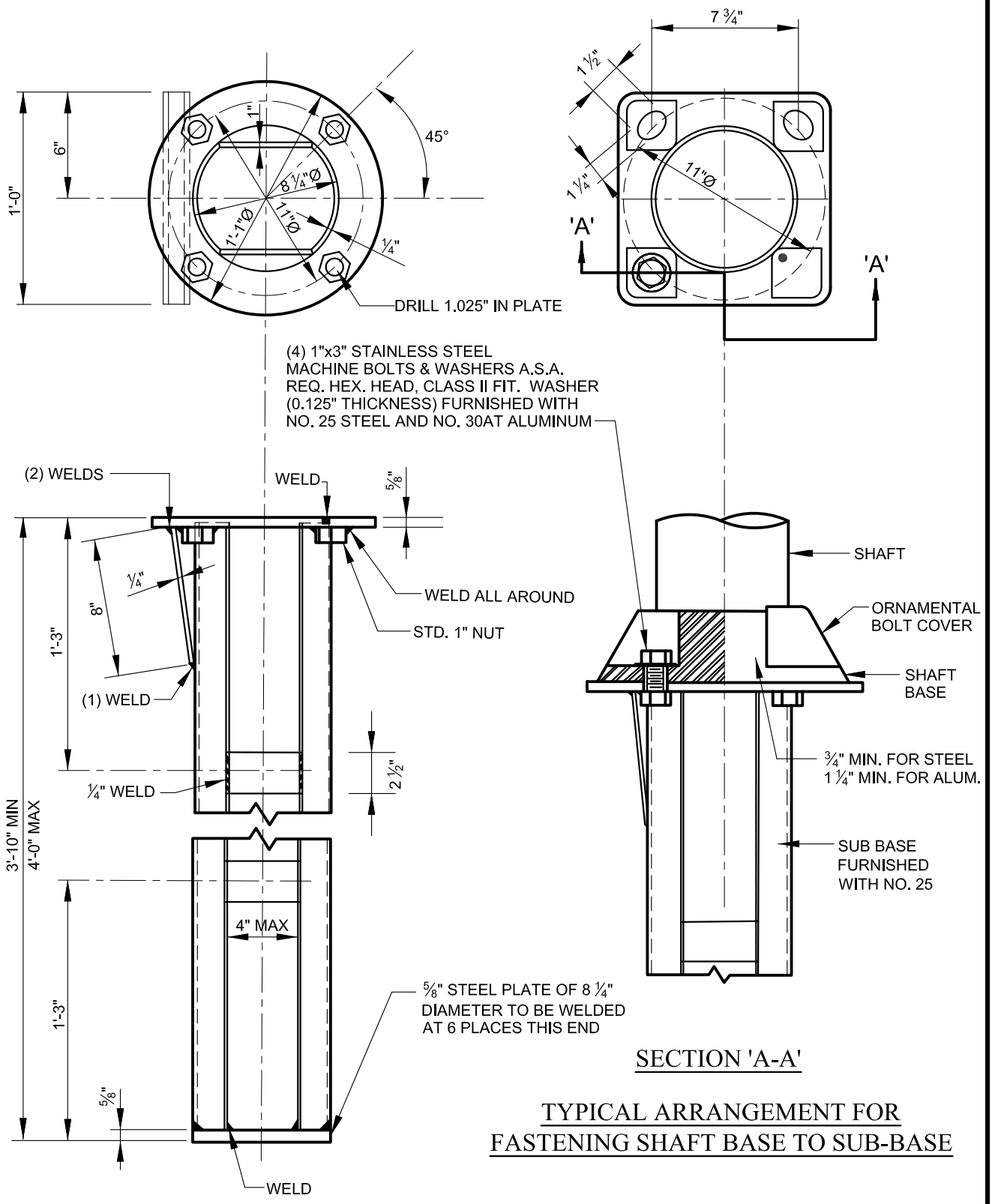

SECTION 'A-A'

TYPICAL ARRANGEMENT FOR FASTENING SHAFT BASE TO SUB-BASE

APPROVED:

DIVISION CHIEF, TRANSPORTATION ENGINEERING AND CONSTRUCTION

DIRECTOR, DEPARTMENT OF TRANSPORTATION

CITY OF BALTIMORE
DEPARTMENT OF TRANSPORTATION
TRANSPORTATION ENGINEERING AND CONSTRUCTION

FOUNDATION BASE FOR LIGHT POLES - STEEL SUB-BASE

ISSUED	REVISED	REVISED
8 / 2010		

STANDARD NO.
BC 801.03

SCALE : NONE

SHEET 1 OF 1

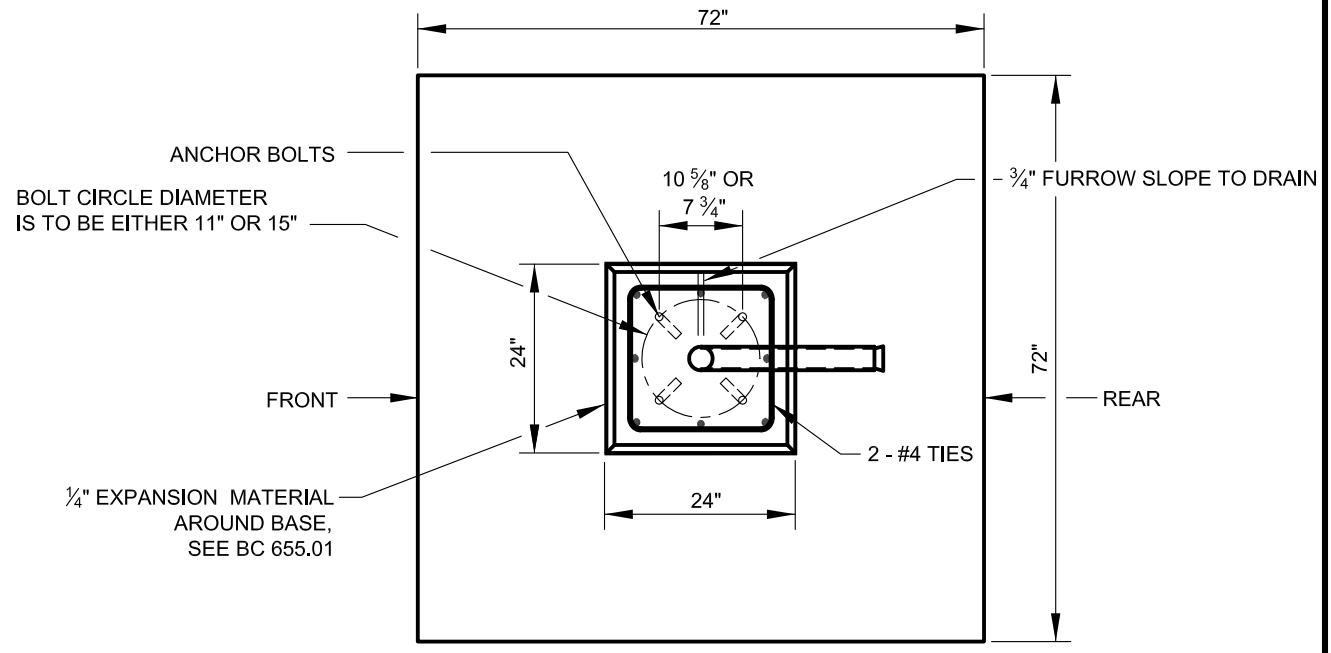

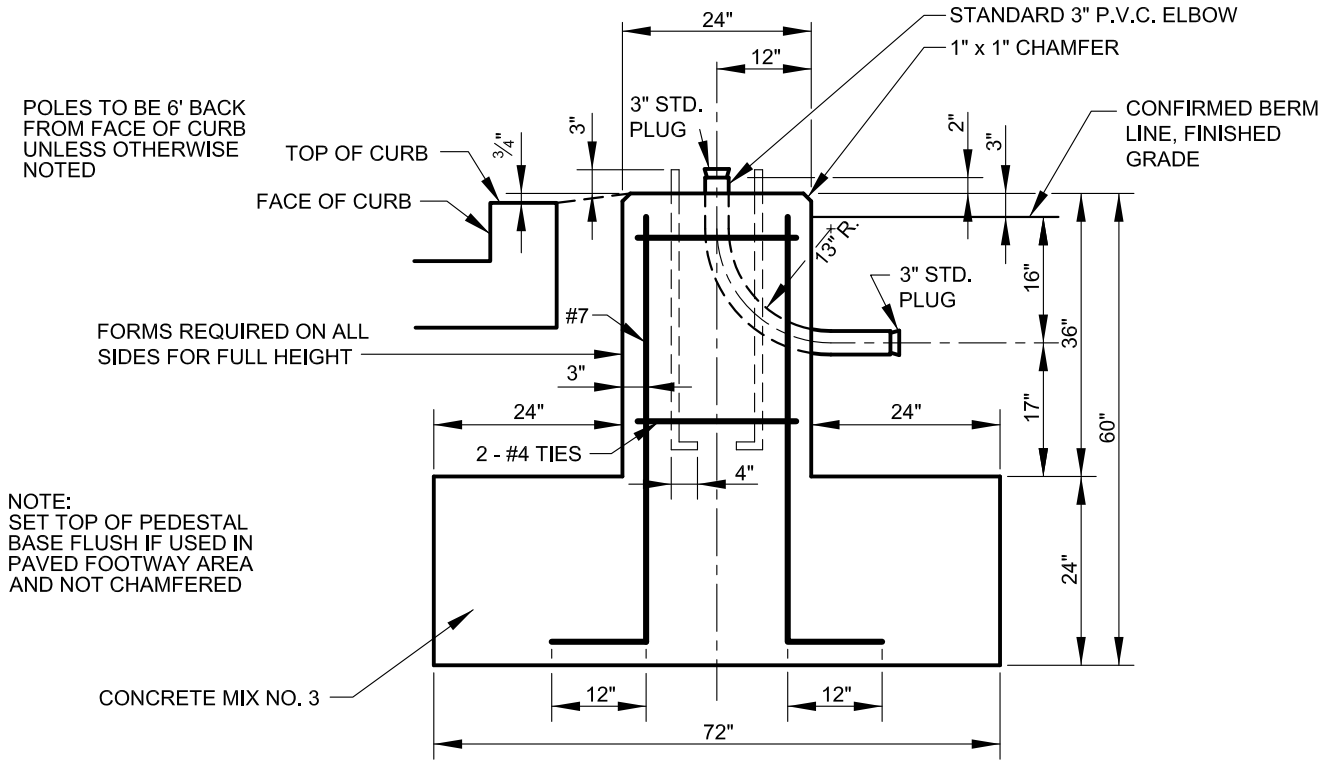

FOUNDATION BASE FOR POLES,
UTILIZING MAST ARMS UP TO 18'

APPROVED:

DIVISION CHIEF, TRANSPORTATION ENGINEERING AND CONSTRUCTION

DIRECTOR, DEPARTMENT OF TRANSPORTATION

CITY OF BALTIMORE
DEPARTMENT OF TRANSPORTATION
TRANSPORTATION ENGINEERING AND CONSTRUCTION

ROADWAY FOUNDATION BASE FOR LIGHT POLES - FREE STANDING TYPE

ISSUED	REVISED	REVISED
8 / 2010		

STANDARD NO.
BC 801.04

SCALE : NONE

SHEET 1 OF 1

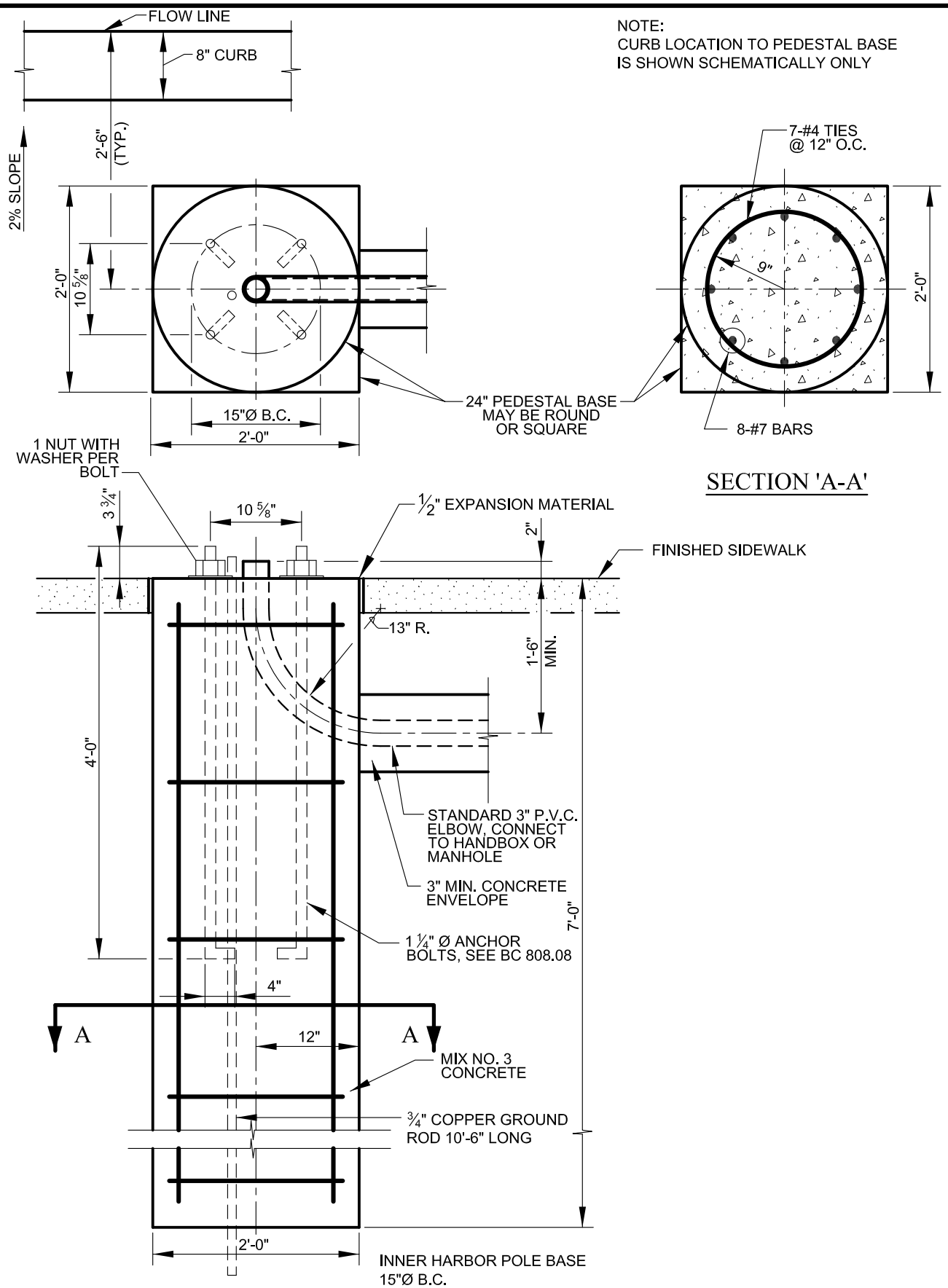

APPROVED:

DIVISION CHIEF, TRANSPORTATION ENGINEERING AND CONSTRUCTION

DIRECTOR, DEPARTMENT OF TRANSPORTATION

CITY OF BALTIMORE
DEPARTMENT OF TRANSPORTATION
TRANSPORTATION ENGINEERING AND CONSTRUCTION

ROADWAY PEDESTAL BASE FOR INNER HARBOR TYPE LIGHT POLES

ISSUED	REVISED	REVISED
8 / 2010		

STANDARD NO.
BC 801.05

SCALE : NONE

SHEET 1 OF 1

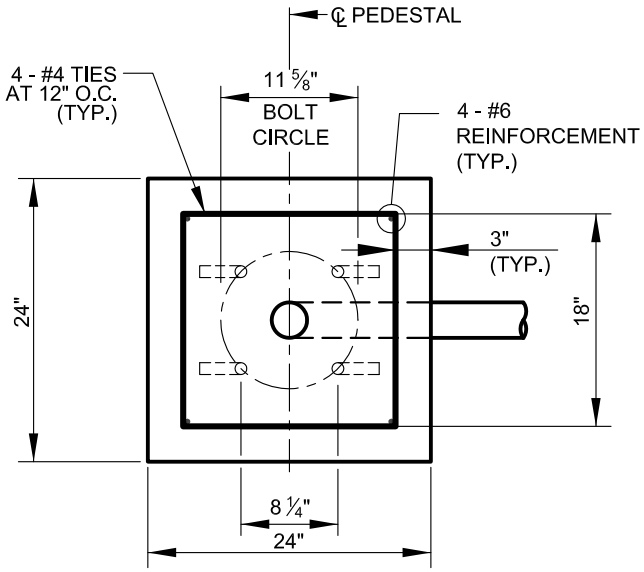

PLAN

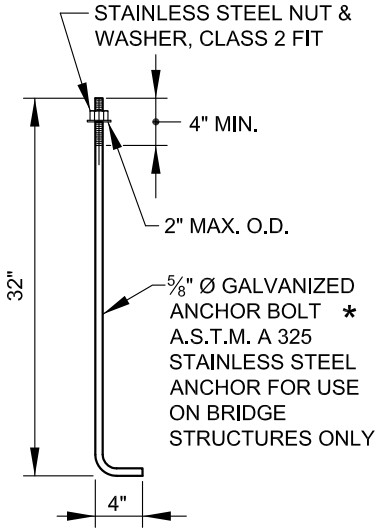

DETAIL 'A'

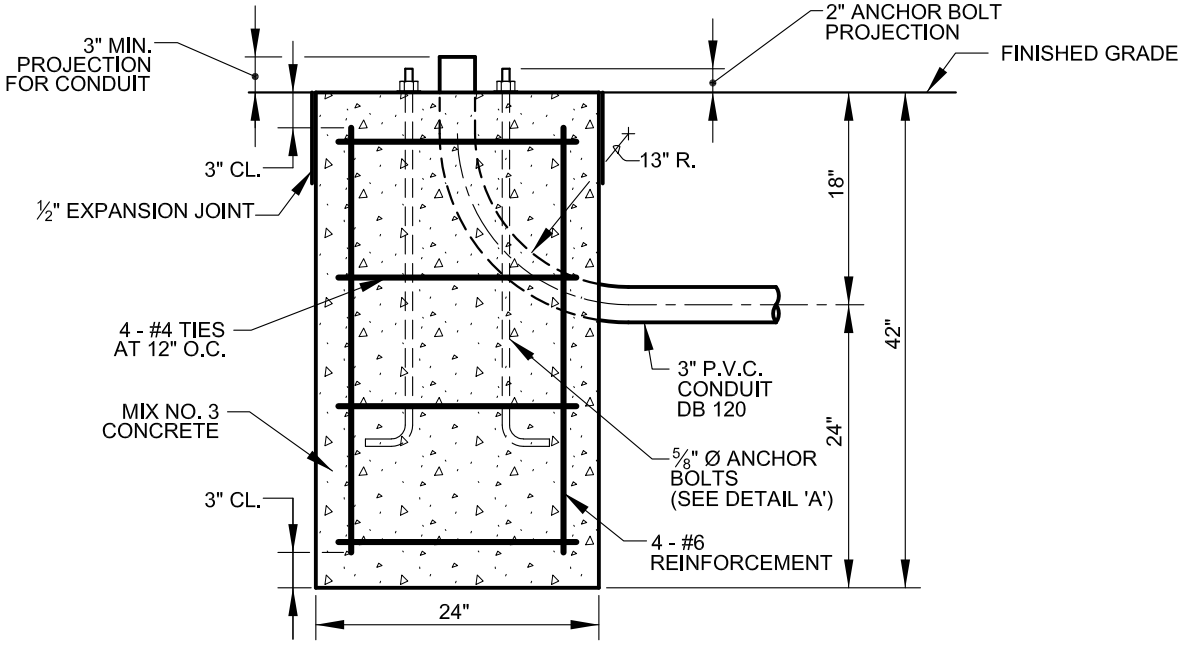

ELEVATION

* ANCHOR BOLTS TO BE SUPPLIED WITH ONE HEX NUT & ONE WASHER, EACH TO BE STAINLESS STEEL

APPROVED:

DIVISION CHIEF, TRANSPORTATION ENGINEERING AND CONSTRUCTION

DIRECTOR, DEPARTMENT OF TRANSPORTATION

CITY OF BALTIMORE
DEPARTMENT OF TRANSPORTATION
TRANSPORTATION ENGINEERING AND CONSTRUCTION

BOLTON HILL, FELLS POINT AND OTTERBEIN BASE

ISSUED	REVISED	REVISED
8 / 2010		

STANDARD NO.
BC 801.07

SCALE : NONE

SHEET 1 OF 1

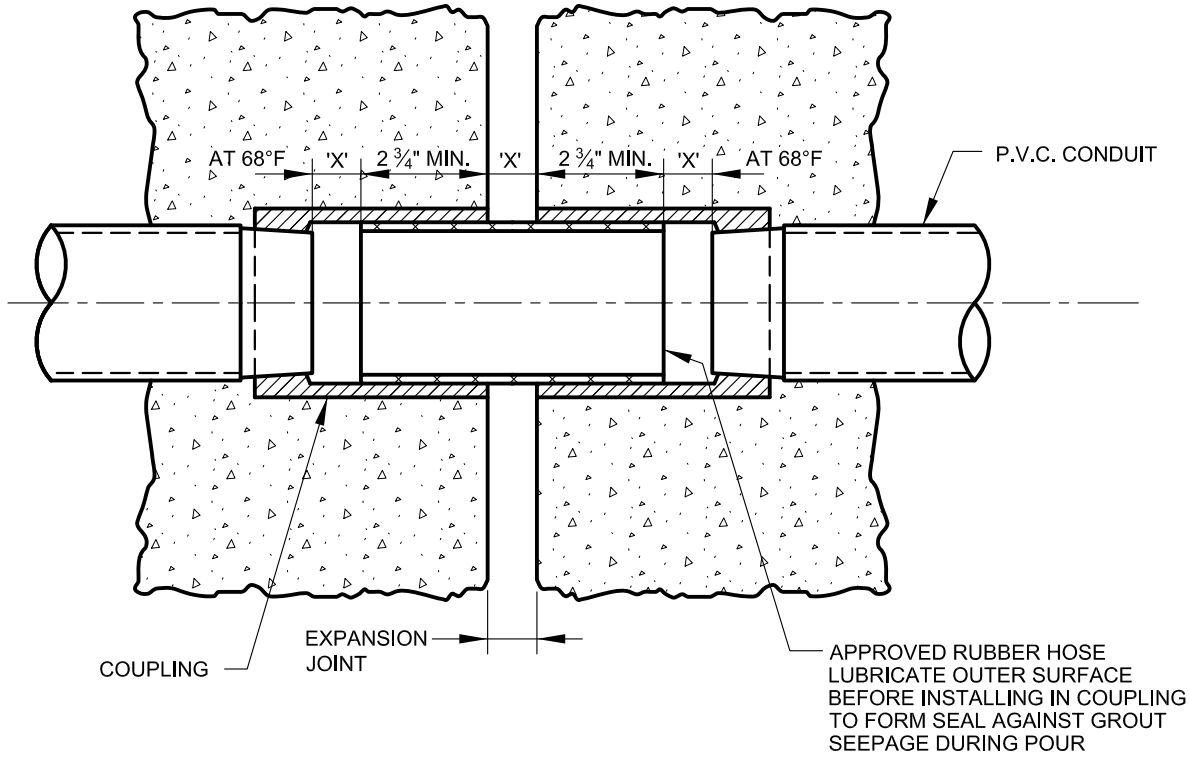

NOTE:
DIMENSION 'X' TO BE DETERMINED
BY DESIGN REQUIREMENTS

APPROVED:

CHIEF, CONDUIT DIVISION

DIRECTOR, DEPARTMENT OF TRANSPORTATION

CITY OF BALTIMORE
DEPARTMENT OF TRANSPORTATION
CONDUIT DIVISION

CONDUIT EXPANSION COUPLING PARAPET

ISSUED	REVISED	REVISED
8 / 2010		

STANDARD NO.
BC 802.01-1

SCALE : NONE

SHEET 1 OF 2

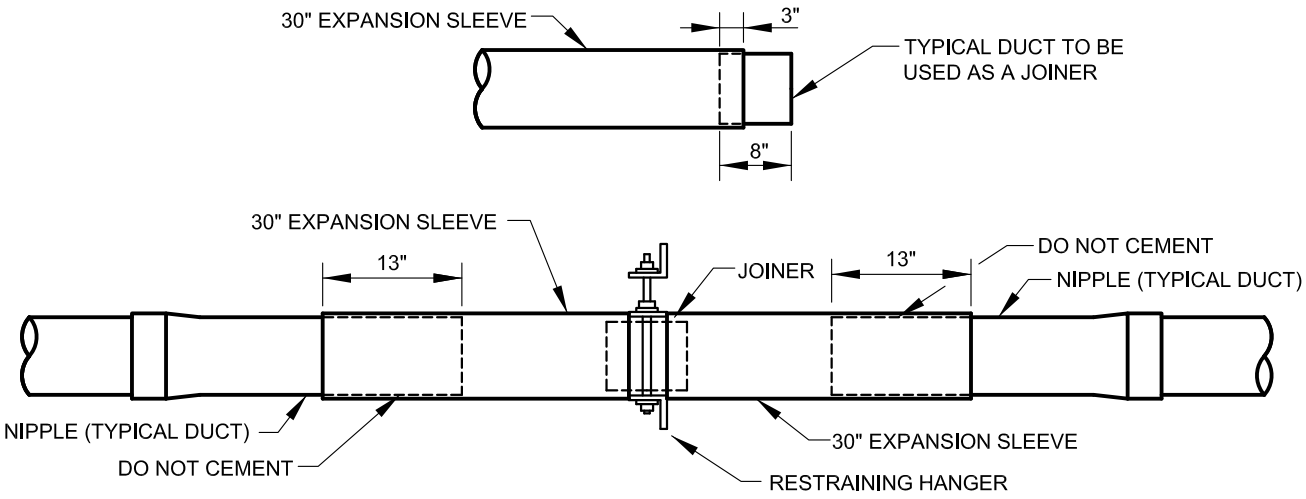

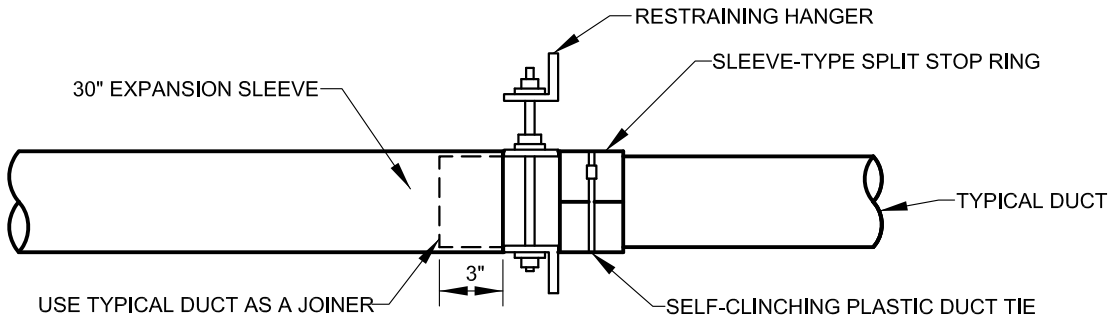

DETAIL 'A'

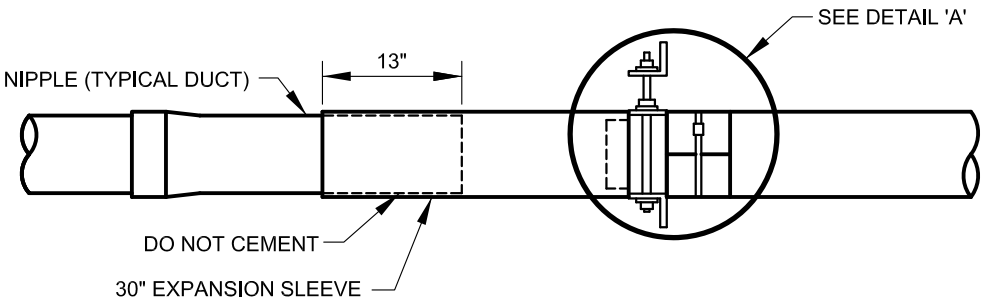

NOTE:
BEVEL INSIDE EDGES OF SLEEVES, NIPPLE, AND JOINER.
SCORE ENDS OF ALL THREADS AFTER INSTALLATION.

APPROVED:

CHIEF, CONDUIT DIVISION

DIRECTOR, DEPARTMENT OF TRANSPORTATION

CITY OF BALTIMORE
DEPARTMENT OF TRANSPORTATION
CONDUIT DIVISION

CONDUIT EXPANSION JOINT FOR SUSPENDED ELECTRICAL DUCT

ISSUED	REVISED	REVISED
8 / 2010		

STANDARD NO.
BC 802.01-2

SCALE : NONE

SHEET 2 OF 2

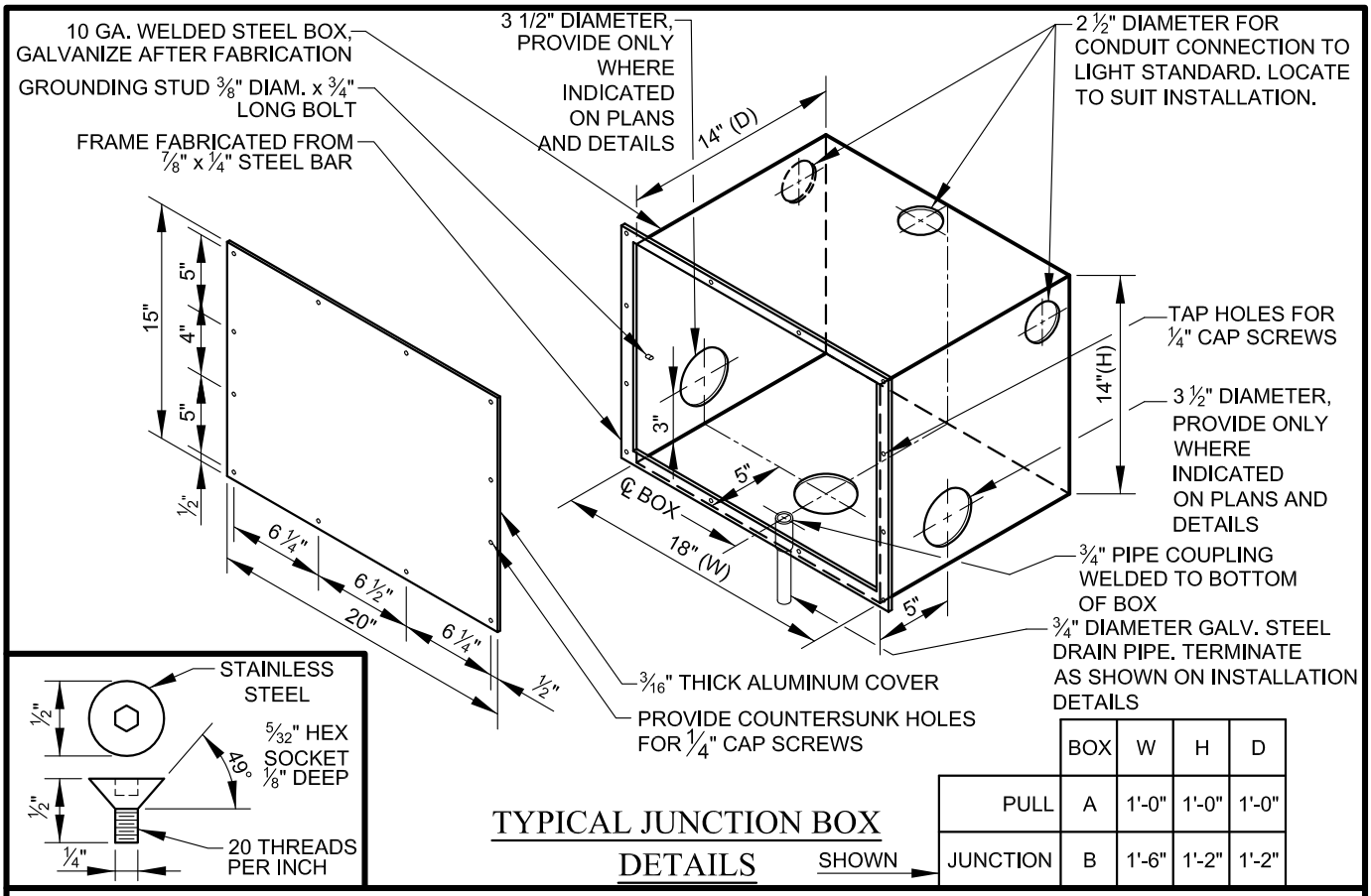

	BOX	W	H	D
PULL	A	1'-0"	1'-0"	1'-0"
JUNCTION	B	1'-6"	1'-2"	1'-2"

TYPICAL JUNCTION BOX DETAILS SHOWN

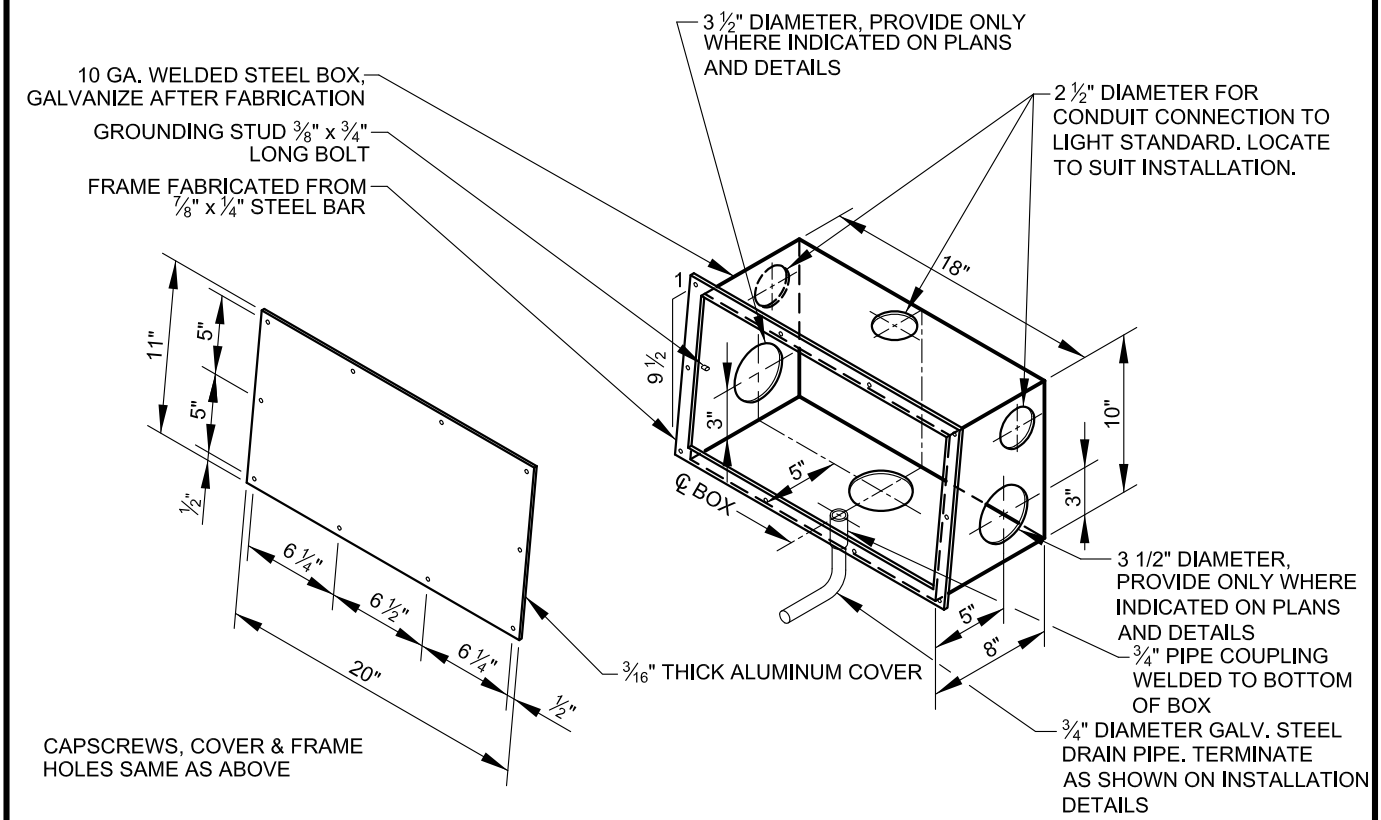

JUNCTION & PULL BOX FOR N.J. TYPE PARAPETS

(BUILT IN BALAST ONLY)

APPROVED:

DIVISION CHIEF, TRANSPORTATION ENGINEERING AND CONSTRUCTION

DIRECTOR, DEPARTMENT OF TRANSPORTATION

CITY OF BALTIMORE
DEPARTMENT OF TRANSPORTATION
TRANSPORTATION ENGINEERING AND CONSTRUCTION

ISSUED	REVISED	REVISED
8 / 2010		

JUNCTION BOXES & PULL BOXES

STANDARD NO. BC 802.02

SCALE : NONE | SHEET 1 OF 1

SQUARE ADAPTER 3 1/2" TO 3" AND 4" P.V.C.

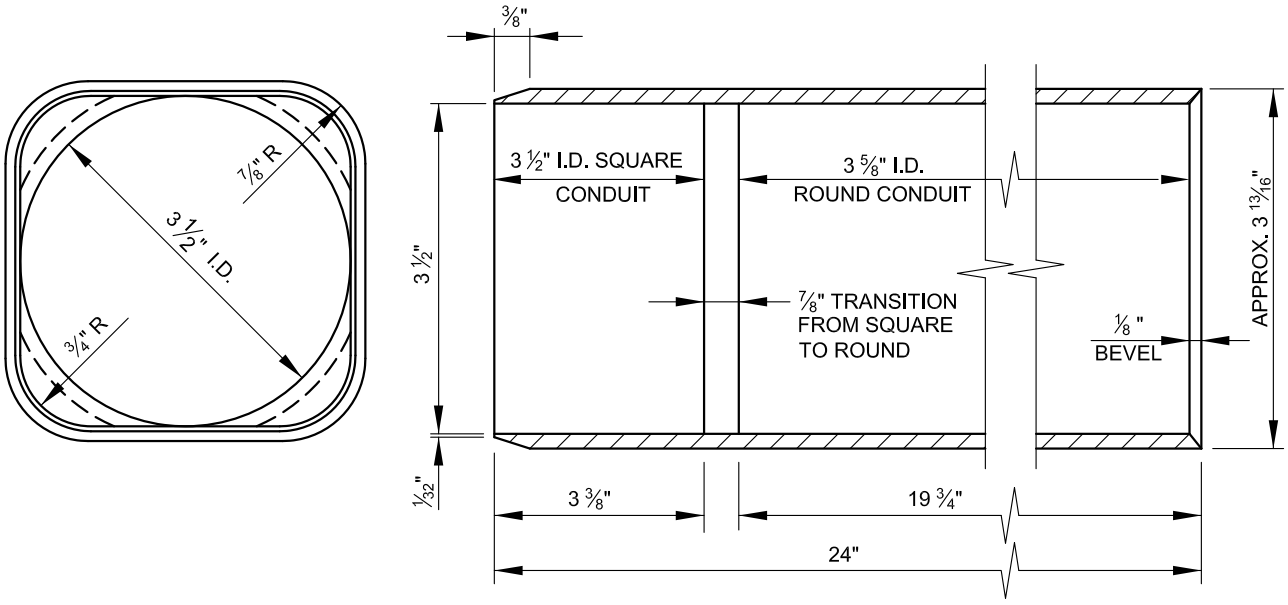

SQUARE BORE ADAPTER

USED TO CONVERT FROM "SQUARE" 3 1/2" TILE DUCT TO 3" AND 4" ROUND P.V.C. PLASTIC DUCT.

MADE OF P.V.C. PLASTIC IN ACCORDANCE TO THESE SPECIFICATIONS, A.S.T.M. F 512, RATING 90°C

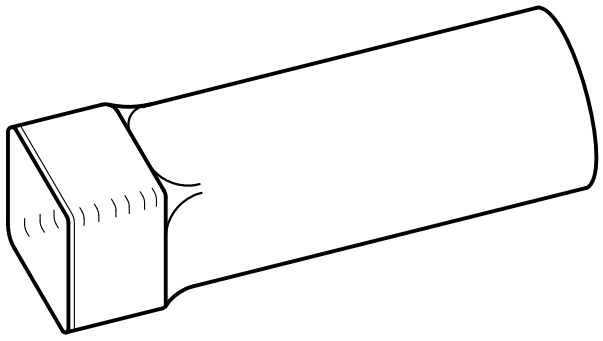

APPROVED:

CHIEF, CONDUIT DIVISION

DIRECTOR, DEPARTMENT OF TRANSPORTATION

CITY OF BALTIMORE
DEPARTMENT OF TRANSPORTATION
CONDUIT DIVISION

ISSUED	REVISED	REVISED
8 / 2010		

CONDUIT
SQUARE BORE ADAPTER

STANDARD NO.
BC 802.03-1

SCALE : NONE

SHEET 1 OF 4

SQUARE BORE ADAPTER 3 3/4" TO 4"

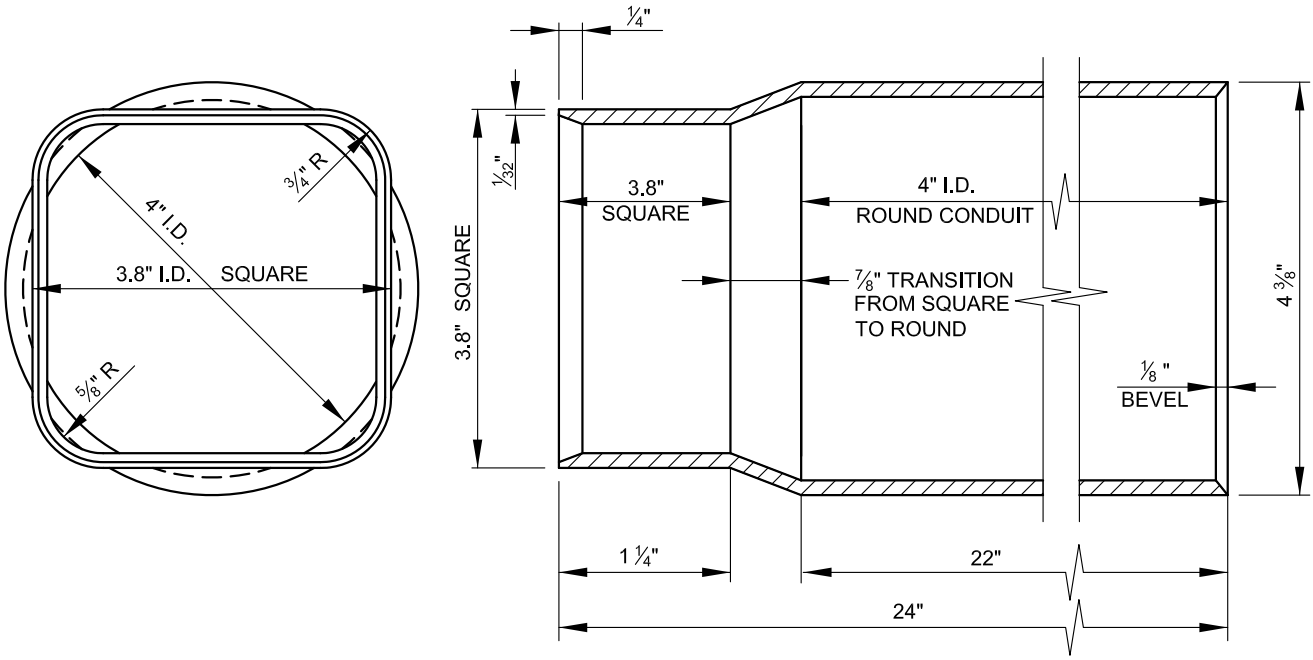

SQUARE BORE ADAPTER

USED TO CONVERT FROM "SQUARE" 3 3/4" ± TILE DUCT TO 4" ROUND P.V.C. PLASTIC DUCT.

MADE OF P.V.C. PLASTIC IN ACCORDANCE TO THESE SPECIFICATIONS, A.S.T.M. F 512, RATING 90°C

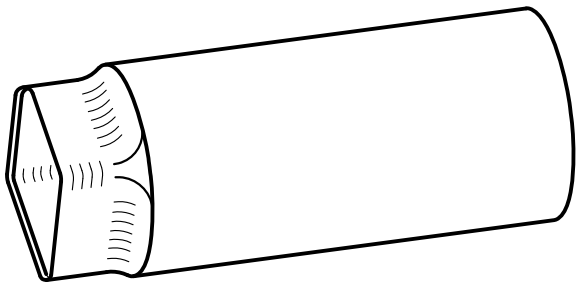

APPROVED:

CHIEF, CONDUIT DIVISION

DIRECTOR, DEPARTMENT OF TRANSPORTATION

CITY OF BALTIMORE
DEPARTMENT OF TRANSPORTATION
CONDUIT DIVISION

ISSUED	REVISED	REVISED
8 / 2010		

CONDUIT
SQUARE BORE ADAPTER

STANDARD NO.
BC 802.03-2

SCALE : NONE

SHEET 2 OF 4

DUCT PLUG

P.V.C.	6"	TAPERED
P.V.C.	5"	TAPERED
P.V.C.	4"	TAPERED
P.V.C.	3 "	TAPERED

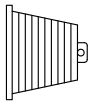

DUCT TERMINATORS

ABS	6"	2-WAY
ABS	6"	3-WAY
ABS	5"	2 -WAY
ABS	5"	3-WAY
ABS	4"	2-WAY
ABS	4"	3-WAY

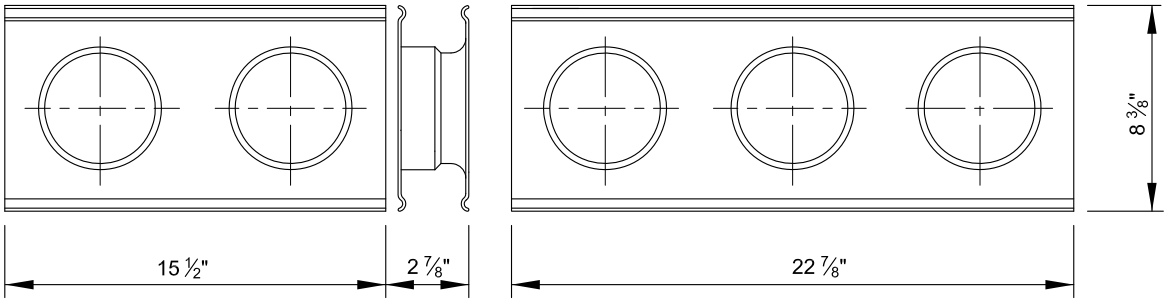

DUCT BELL ENDS

P.V.C.	6"	MOLDED
P.V.C.	5"	MOLDED
P.V.C.	4"	MOLDED
P.V.C.	3"	MOLDED

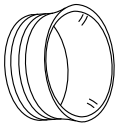

APPROVED:

CHIEF, CONDUIT DIVISION

DIRECTOR, DEPARTMENT OF TRANSPORTATION

CITY OF BALTIMORE
DEPARTMENT OF TRANSPORTATION
CONDUIT DIVISION

ISSUED	REVISED	REVISED
8 / 2010		

DUCT PLUGS, BELL ENDS AND TERMINATORS

STANDARD NO.
BC 802.03-3

SCALE : NONE

SHEET 3 OF 4

SPLIT DUCT (LOCKING TONGUE & GROOVE)
10 FT. LENGTHS

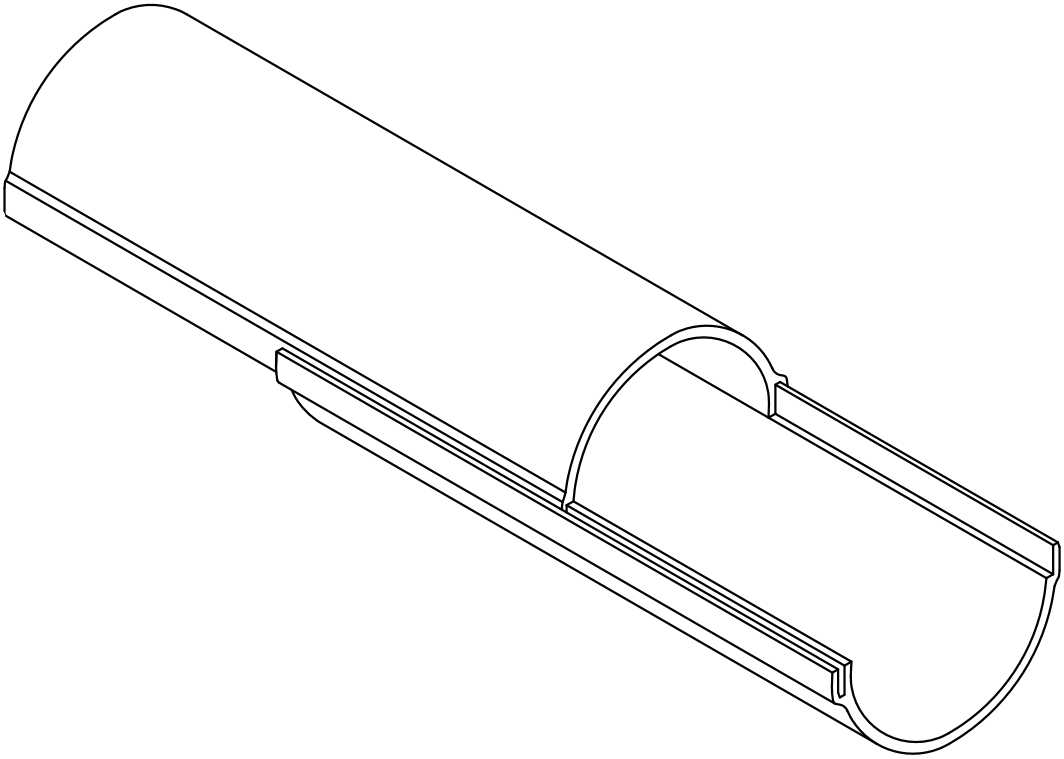

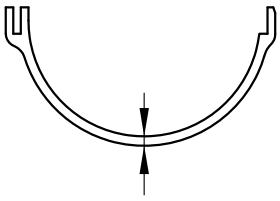

MINIMUM WALL THICKNESSES

3" D.B. —— 0.118"
4" D.B. —— 0.154"
5" D.B. —— 0.191"
6" D.B. —— 0.227"

SPLIT DUCT IS USED TO COVER EXISTING UNDERGROUND CABLES OR REPAIRING DAMAGED DUCT WITHOUT CUTTING OR RESPLICING EXISTING CABLES. MADE OF P.V.C. DUCT.

A.S.T.M. F 512
RATED 90° C

APPROVED:

CHIEF, CONDUIT DIVISION

DIRECTOR, DEPARTMENT OF TRANSPORTATION

CITY OF BALTIMORE
DEPARTMENT OF TRANSPORTATION
CONDUIT DIVISION

ISSUED	REVISED	REVISED
8 / 2010		

SPLIT DUCT

STANDARD NO.
BC 802.03-4

SCALE : NONE

SHEET 4 OF 4

5" PVC PLASTIC UTILITY DUCT ON BRIDGE HANGER SUPPORTS

Existing bridge diaphragms used for hanger support.

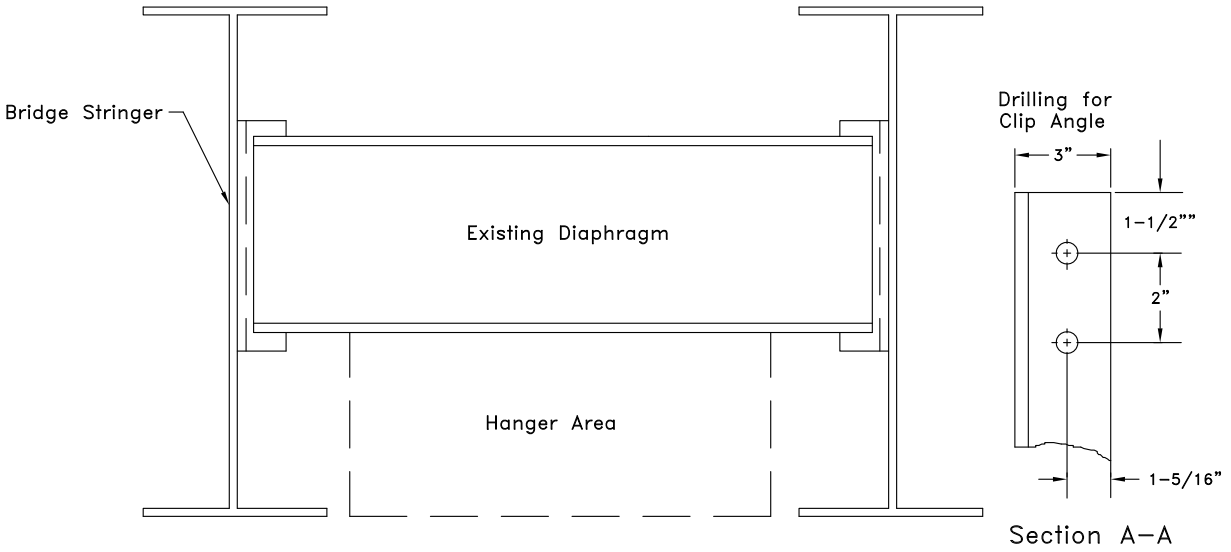

Figure 1

Intermediate support used to supplement existing diaphragms.

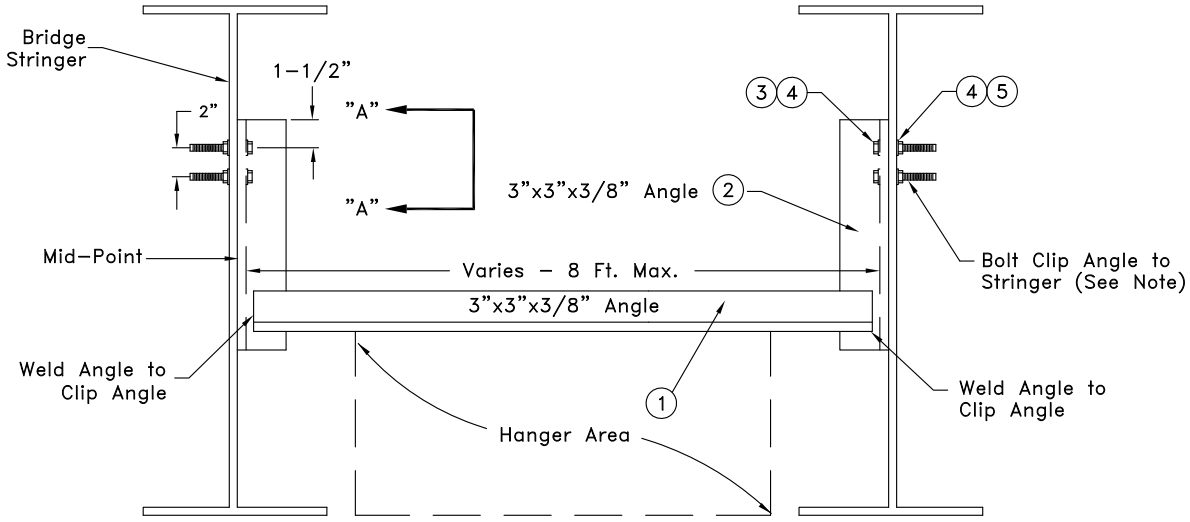

Figure 2

	Description	Quantity
1	3" x 3" x 3/8" Steel angle	As Required
2	3" x 3" x 3/8" Steel angle	2
3	1/2" x 4" Galv. sq. hd. bolts	4
4	1/2" Galv. round flat washers	8
5	1/2" Galv. hex. hd. locknuts	4

5" PVC duct Schedule 40 shall be used for bridge attachments.

Note: All clip angles must be bolted at or above the mid-point of the stringer, clip angle length shall be determined by the elevation of the duct.

APPROVED:

CHIEF, CONDUIT DIVISION

DIRECTOR, DEPARTMENT OF TRANSPORTATION

CITY OF BALTIMORE
DEPARTMENT OF TRANSPORTATION
CONDUIT DIVISION

ISSUED	REVISED	REVISED
8 / 2010		

5" PVC, PLASTIC UTILITY DUCT ON BRIDGE HANGER SUPPORTS

STANDARD NO. BC 802.04-1

SCALE : NONE

SHEET 1 OF 6

5" PVC PLASTIC UTILITY DUCT ON BRIDGE HANGER SUPPORTS

Type R–4

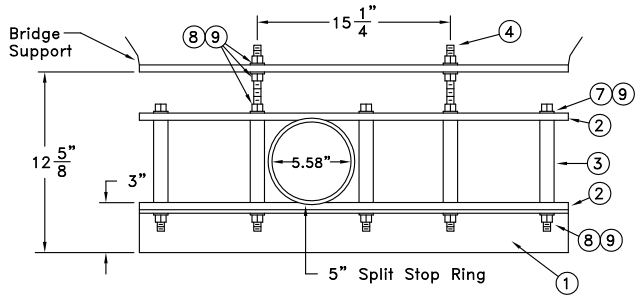

Type RT–8

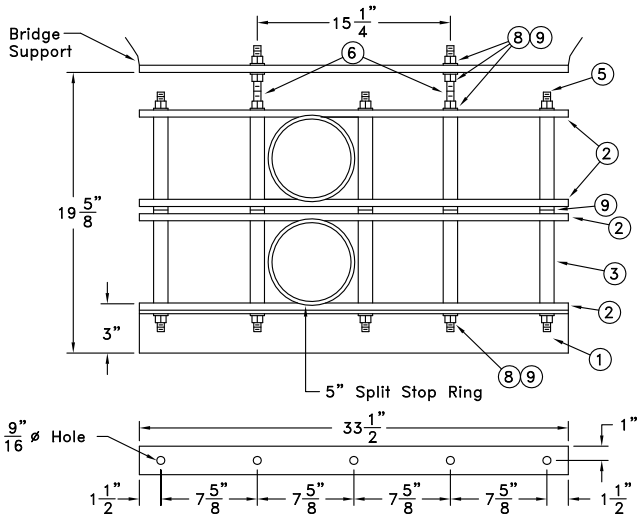

Drilling Detail, Item 1 & 2

Bill of Material

Item	Description	Quantity Restraining Type R–4	Quantity Restraining Type RT–8
1	3" x 2" x 1/4" x 33–1/2" Lg. steel angle	1	1
2	1/2" x 2" x 33–1/2" PVC plate	2	4
3	1/2" x 5–3/4" Schedule 40 PVC pipe	5	10
4	1/2" x 13" Galv. all thread hanger rod	2	
5	1/2" x 17" Galv. all thread hanger rod		3
6	1/2" x 20" Galv. all thread hanger rod		2
7	1/2" x 9" Galv. sq. hd. bolt	3	
8	1/2" Galv. hex. hd. locknut	11	14
9	1/2" Galv. round flat washer	14	24

Instructions:

(A) Score ends of all threads after installation.

(B) When conduit is not being restrained, bell ends or couplings shall not be located closer than 14" to any hanger.

(C) Paint all fabricated steel welds with an approved stainless steel paint. Color to be compatible with bridge.

APPROVED:

CHIEF, CONDUIT DIVISION

DIRECTOR, DEPARTMENT OF TRANSPORTATION

CITY OF BALTIMORE
DEPARTMENT OF TRANSPORTATION
CONDUIT DIVISION

ISSUED	REVISED	REVISED
8 / 2010		

5" PVC, PLASTIC UTILITY DUCT ON BRIDGE HANGER SUPPORTS

STANDARD NO.
BC 802.04-2

SCALE : NONE

SHEET 2 OF 6

5" PVC PLASTIC UTILITY DUCT ON BRIDGE HANGER SUPPORTS

Type R–6

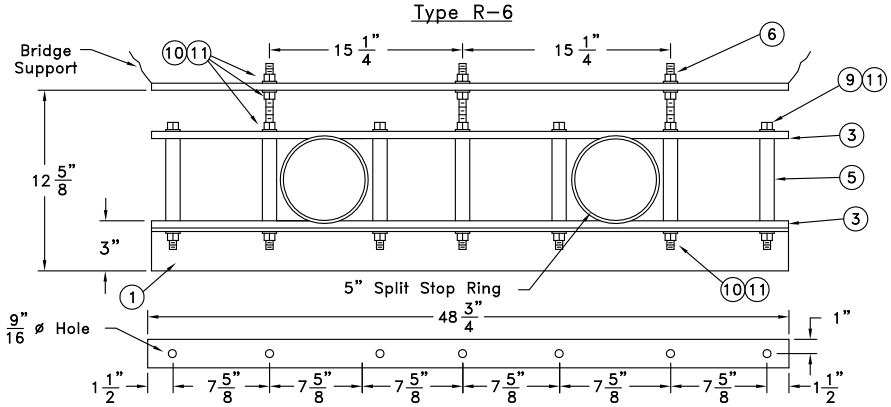

Drilling Detail, Item 1 & 3

Type RT–6

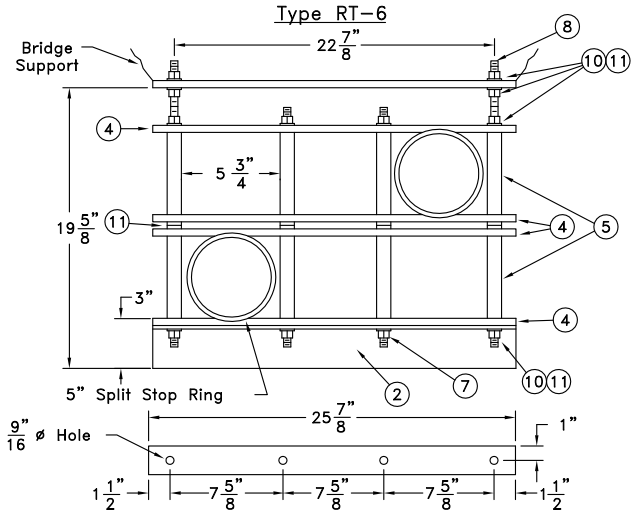

Drilling Detail, Item 2 & 4

Bill of Material

Item	Description	Quantity Restraining Type R–6	Quantity Restraining Type RT–6
1	3" x 2" x 1/4" x 48–3/4" Lg. steel angle	1	
2	3" x 2" x 1/4" x 25–7/8" Lg. steel angle		1
3	1/2" x 2" x 48–3/4" PVC plate	2	
4	1/2" x 2" x 25–7/8" PVC plate		4
5	1/2" x 5–3/4" Schedule 40 PVC pipe	7	8
6	1/2" x 13" Galv. all thread hanger rod	3	
7	1/2" x 17" Galv. all thread hanger rod		2
8	1/2" x 20" Galv. all thread hanger rod		2
9	1/2" x 9" Galv. sq. hd. bolt	4	
10	1/2" Galv. hex. hd. locknut	16	12
11	1/2" Galv. round flat washer	20	20

Instructions:

(A) Score ends of all threads after installation.

(B) When conduit is not being restrained, bell ends or couplings shall not be located closer than 14" to any hanger.

(C) Paint all fabricated steel welds with an approved stainless steel paint. Color to be compatible with bridge.

APPROVED:

CHIEF, CONDUIT DIVISION

DIRECTOR, DEPARTMENT OF TRANSPORTATION

CITY OF BALTIMORE
DEPARTMENT OF TRANSPORTATION
CONDUIT DIVISION

ISSUED	REVISED	REVISED
8 / 2010		

5" PVC, PLASTIC UTILITY DUCT ON BRIDGE HANGER SUPPORTS

STANDARD NO. BC 802.04-3

SCALE : NONE

SHEET 3 OF 6

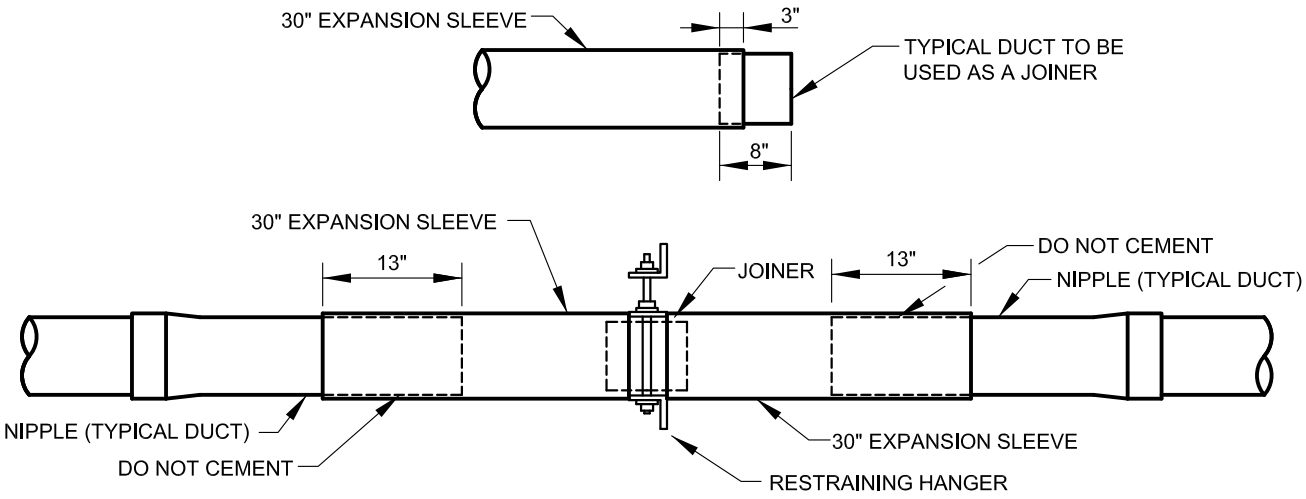

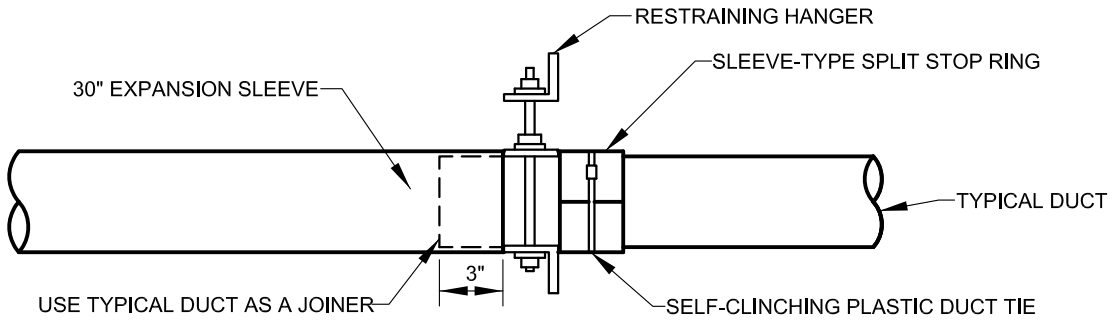

DETAIL 'A'

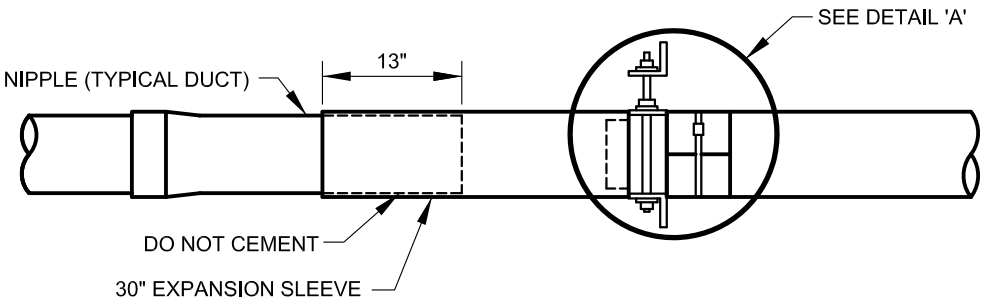

NOTE:
BEVEL INSIDE EDGES OF SLEEVES, NIPPLE, AND JOINER.
SCORE ENDS OF ALL THREADS AFTER INSTALLATION.

APPROVED:

CHIEF, CONDUIT DIVISION

DIRECTOR, DEPARTMENT OF TRANSPORTATION

CITY OF BALTIMORE
DEPARTMENT OF TRANSPORTATION
CONDUIT DIVISION

ISSUED	REVISED	REVISED
8 / 2010		

5" PVC DUCT ON BRIDGES BACK TO BACK EXPANSION JOINT INSTALLATION

STANDARD NO.
BC 802.04-4

SCALE : NONE

5" PVC DUCT ON BRIDGES
BACK TO BACK EXPANSION JOINT INSTALLATION

Instructions:
To install the expansion joint:

(A) Cut an 8 inch length of duct to serve as a joiner between the two expansion sleeves.

(B) Bevel inside edges of sleeves, nipple and joiner.

(C) Apply cleaner to one end of this joiner and to the inside of an expansion joint sleeve (3 inches wide).

(D) Immediately apply cement generously to one end of the joiner piece, and insert 3 inches into the end of the expansion joint sleeve. (See Figure 1)

(E) Insert this 8 inch joiner through the support and repeat steps C and D. Be certain that the shoulders of both expansion joint sleeves set firm.

(F) Install the duct nipples into the expansion sleeves as shown in Figure 2.

(G) Score ends of all threads after installation.

(H) Baltimore City uses 3" and 4" PVC ducts for ultilities other than Baltimore Gas and Electirc Company.

Notes:
The coefficient of thermal expansion for PVC is .00003 inches per inch per degree fahrenheit.
The length of a 100 foot conduit run will change 3.6 inches during a temperature change of 100° F.

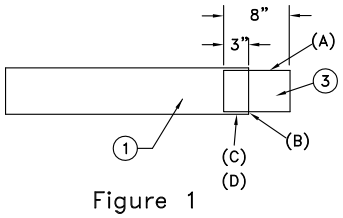

Figure 1

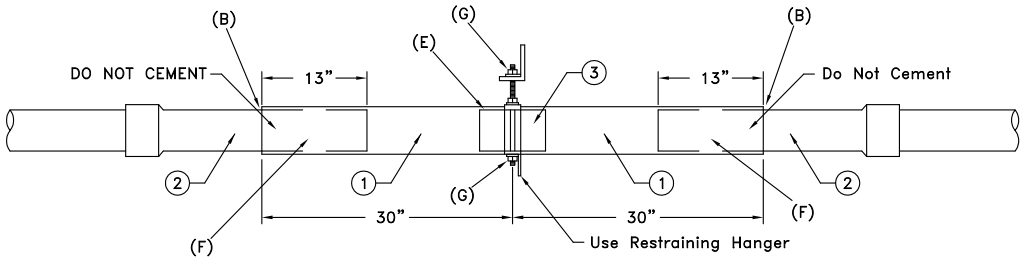

Figure 2

Bill of Material

Item	Description	Quantity
1	30" Expansion sleeve	2
2	5" – I.D. – Duct nipple (Schedule 40)	2
3	5" – I.D. x 8" – Duct joiner (Schedule 40)	1

APPROVED:

CHIEF, CONDUIT DIVISION

DIRECTOR, DEPARTMENT OF TRANSPORTATION

CITY OF BALTIMORE
DEPARTMENT OF TRANSPORTATION
CONDUIT DIVISION

ISSUED	REVISED	REVISED
8 / 2010		

5" PVC DUCT ON BRIDGES
BACK TO BACK EXPANSION JOINT INSTALLATION

STANDARD NO.
BC 802.04-5

SCALE : NONE

SHEET 5 OF 6

5" PVC PLASTIC UTILITY DUCT ON BRIDGES
STOP RING INSTALLATION AND DUCT TERMINATION

Typical Stop Ring Installation

(A) Apply cement around duct (3–inch wide band) on each side of hanger.

(B) Immediately slide sleeve–type split stop rings over cemented areas, place firmly against hanger and secure in place with plastic duct ties. (See Figure 1)

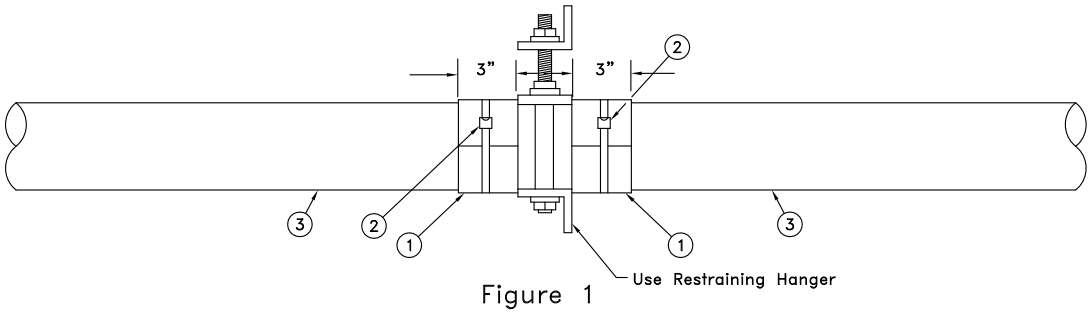

Figure 1

Bill of Material

Item	Description	Quantity
1	5" x 3" Schedule 40 PVC, sleeve–type split stop ring	2
2	20" Plastic duct tie (self–clinching)	2
3	5" Schedule 40 PVC duct	As Req'd.

Duct Termination at Bridge Abutment

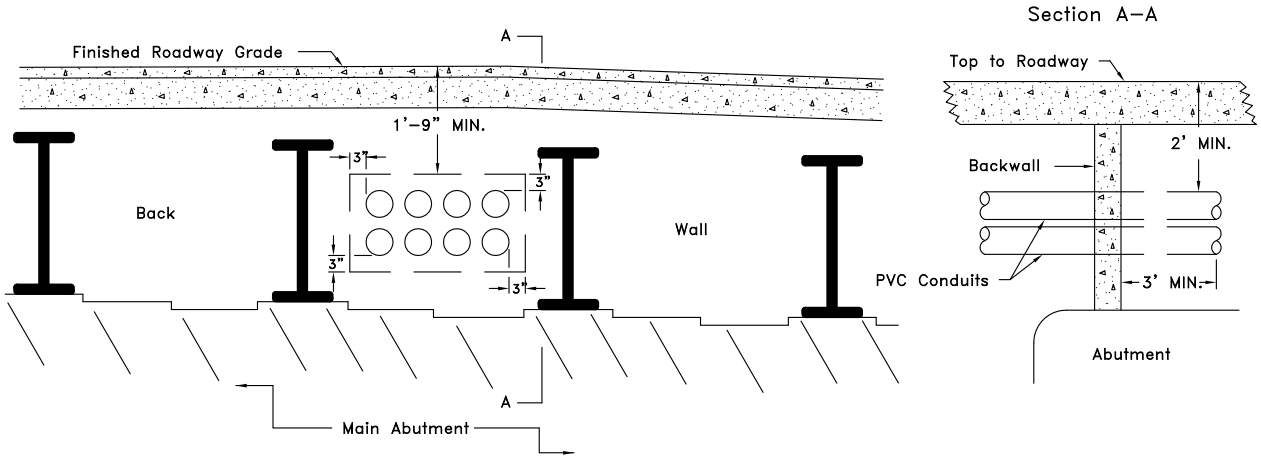

Figure 2

Conduits shall exit from the bridge thru the backwall which is located on top of the main abutment. The opening in the wall to be 6" larger horizontally and vertically than the conduit configuration. The opening around the conduits shall be sealed with a watertight cement grout.

CITY OF BALTIMORE 1797	APPROVED: Richard L. Baker CHIEF, CONDUIT DIVISION Khalil Zaied DIRECTOR, DEPARTMENT OF TRANSPORTATION	CITY OF BALTIMORE DEPARTMENT OF TRANSPORTATION CONDUIT DIVISION	ISSUED	REVISED	REVISED
			8 / 2010		
		5" PVC, PLASTIC UTILITY DUCT ON BRIDGE STOP RING INSTALLATION AND DUCT TERMINATION	STANDARD NO. BC 802.04-6		
			SCALE : NONE	SHEET 6 OF 6	

12" CASING

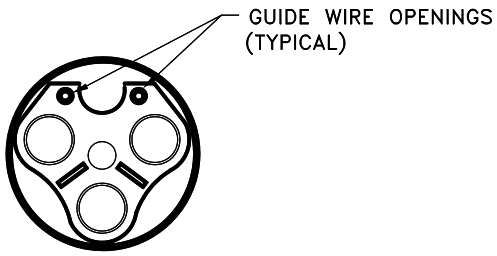

	STOCK No.
3–3" PVC TYPE DB CONDUITS	NON–STOCK
12" OD STEEL CASING PIPE	40–323
BORE SPACER	12–485

20" CASING

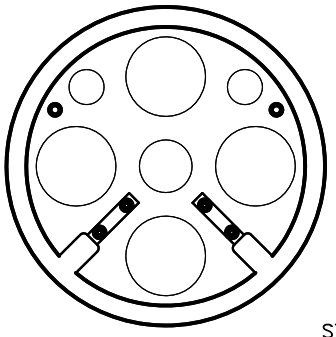

	STOCK No.
4–5" PVC TYPE DB CONDUITS	12–748
20" OD STEEL CASING PIPE	40–946
BORE SPACER	12–512

24" CASING

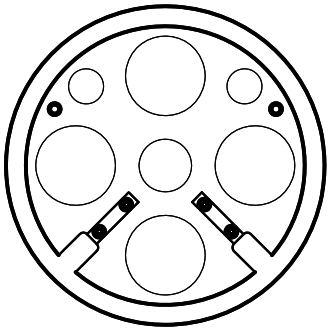

	STOCK No.
6–5" PVC TYPE DB CONDUITS	12–748
24" OD STEEL CASING PIPE	40–859
BORE SPACER	12–486

30" CASING

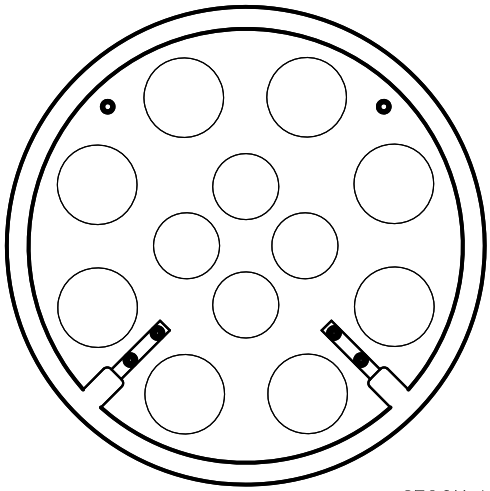

	STOCK No.
8–5" PVC TYPE DB CONDUITS	12–748
30" OD STEEL CASING PIPE	40–860
BORE SPACER	12–708

NOTE

FOR ALL CONDUITS IN CASING PIPE:
CONDUITS TO BE SUPPORTED BY SPECIAL BORE SPACERS AND SHALL BE SPACED A MAXIMUM OF 5' ON CENTERS. AFTER INSTALLATION OF CONDUIT, FILL THE CASING PIPE WITH SPECIAL GROUT No. 424–72 FROM LAFARGE (PREVIOUSLY CALLED GENSTAR) OR AN APPROVED EQUAL. MATERIAL SHALL BE PLACED BY A "SQUEEZE–CRETE" CONCRETE PUMP. QUANTITY TO BE MEASUED AND RECORED.
GROUT CALCULATION FORMULA: (LINEAR FOOTAGE OF CASING X GROUT FACTOR) + 0.5 = CU. YD. GROUT

CASING PIPES			GROUT FACTOR CU.YDS./LN.FT.
NOMINAL SIZE	No. DUCTS	DUCT SIZE	
12"	3	3"	0.022
20"	4	5"	0.053
24"	6	5"	0.075
30"	8	5"	0.126
24"	4	6"	0.077
30"	6	6"	0.123
36"	8	6"	0.184

APPROVED :

CHIEF, CONDUIT DIVISION

DIRECTOR, DEPARTMENT OF TRANSPORTATION

CITY OF BALTIMORE
DEPARTMENT OF TRANSPORTATION
CONDUIT DIVISION

ISSUED	REVISED	REVISED
8 / 2010		

CONDUIT SECTIONS IN CASING PIPE

STANDARD NO.
BC 803.01-1

SCALE : NONE | SHEET 1 OF 5

This Standard covers the installation of ducts in a steel casing pipe.

A. DUCT PLACEMENT

1. After the casing is installed, check to make sure it is clear of obstructions.

2. Only PVC (DB) duct shall be installed in casings. The Material No's are: 3" (12–745), 4" (12–844), 5" (12–748), and 6" (12–A90) Every piece shall be checked for defects.

3. Ducts shall be installed using only Bore or Casing Spacers. The maximum separation between spacers shall be 5 feet.

4. Great care must be used to cement all joints. The pressure created while pumping grout could force grout through a joint if not properly cemented.

5. A wooden cradle should be fabricated to hold the ducts in the proper formation while the spacers are placed over each duct prior to banding. The cradle also keeps the duct formation lined up with the casing entrance.

6. Wrap a strap (preferably non–metallic) around duct formation not more than 6" from the casing spacer. Do not pull strap too tight to deform the duct but just enough to cause the duct to pinch the spacer.

7. Use a push plate (Figure #1) to advance the duct formation into the casing. The plate shall be large enough to bear against the ends of all the ducts.

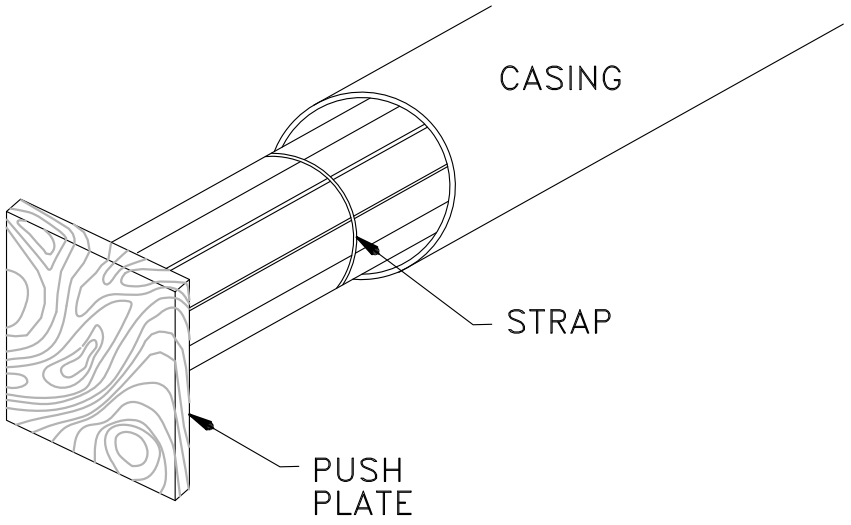

FIGURE 1

8. Ducts should extend a minimum of 2' beyond the casing at both ends. Do not connect to any existing ducts or extend ducts until grouting has been installed and ducts rodded and mandreled.

CITY OF BALTIMORE 1797	APPROVED: Richard L. Baker CHIEF, CONDUIT DIVISION Khalil Zaied DIRECTOR, DEPARTMENT OF TRANSPORTATION	CITY OF BALTIMORE DEPARTMENT OF TRANSPORTATION CONDUIT DIVISION	ISSUED	REVISED	REVISED
			8 / 2010		
		CONDUIT SECTIONS IN CASING PIPE	STANDARD NO. BC 803.01-2		
			SCALE : NONE	SHEET 2 OF 5	

A. DUCT PLACEMENT (Continued)

9. Return ducts to their proper formation if rotation has occurred during insertion into casing.

Special Instructions For Duct Installation In Casings Over 250 Feet In Length

10. Casing spacers are designed with small openings which permit guide wires to be threaded through them. Wires prevent rotation of the duct bank as it advances through the casing. Feed two ¼" guy wires (Mat,l #11–936) through the casing and thread them through all the spacers (openings may need to be punched out). Draw the wires taut and tie them off. Assemble duct and push into casing.

11. Rollers are available for 24", 30" and 36" spacers only and are to reduce friction for an easier installation of ducts. (See Figure 2).

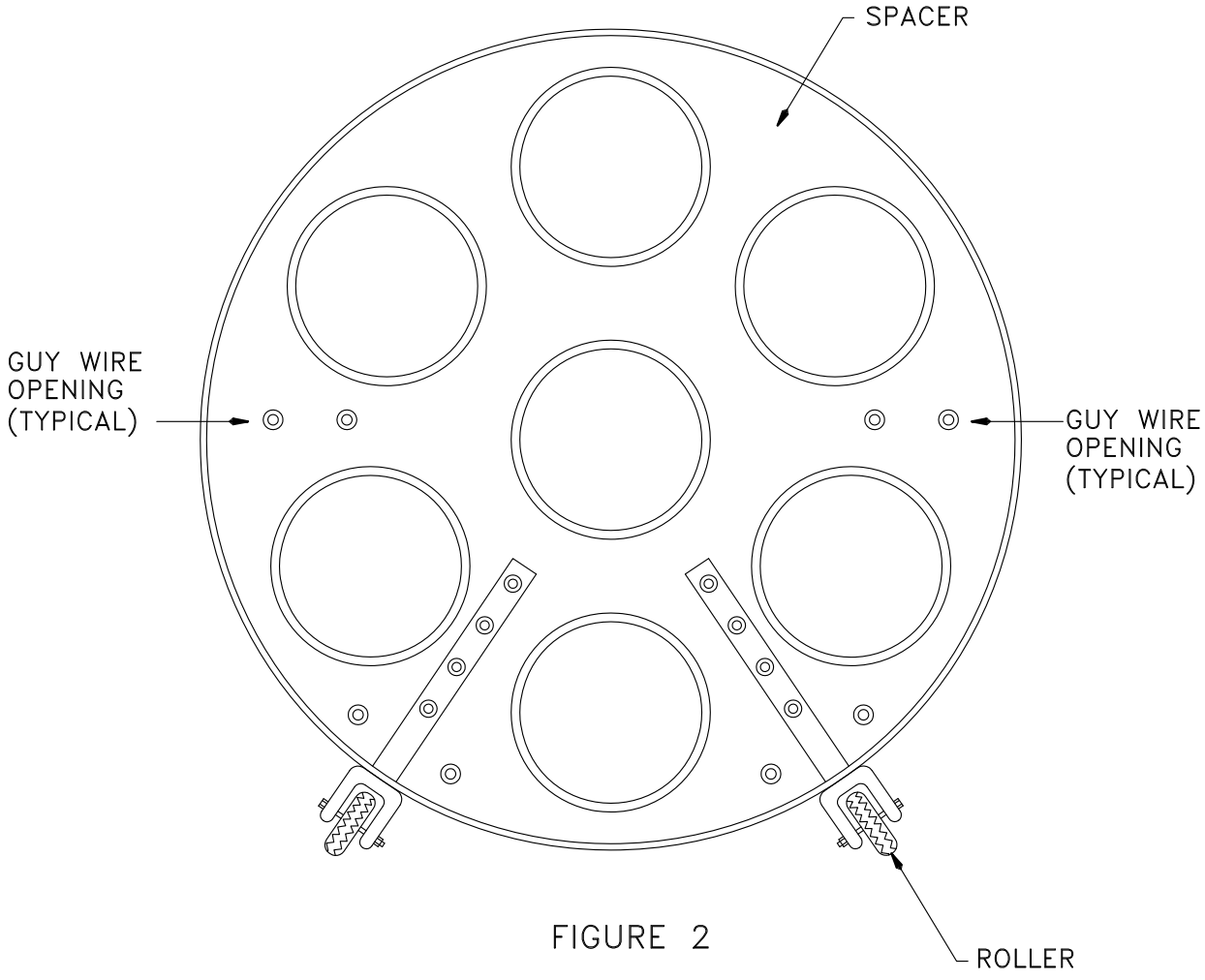

FIGURE 2

APPROVED:

CHIEF, CONDUIT DIVISION

DIRECTOR, DEPARTMENT OF TRANSPORTATION

CITY OF BALTIMORE
DEPARTMENT OF TRANSPORTATION
CONDUIT DIVISION

ISSUED	REVISED	REVISED
8 / 2010		

CONDUIT SECTIONS IN CASING PIPE

STANDARD NO. BC 803.01-3

SCALE : NONE

SHEET 3 OF 5

B. GROUT PLACEMENT

1. Seal Casing Ends

a) Preferred Method – "Box and Pour"

Ducts extending out of the casing shall be cut flush, couplings attached and duct plugs installed (bell ends with duct plugs installed may also be made flush). Build a box form around the casing end with the form flat against the duct ends (See Figure #3). Install the filler and vent pipe (See Sheet 5 0f 5). Fill the box with concrete until the casing end is sealed.

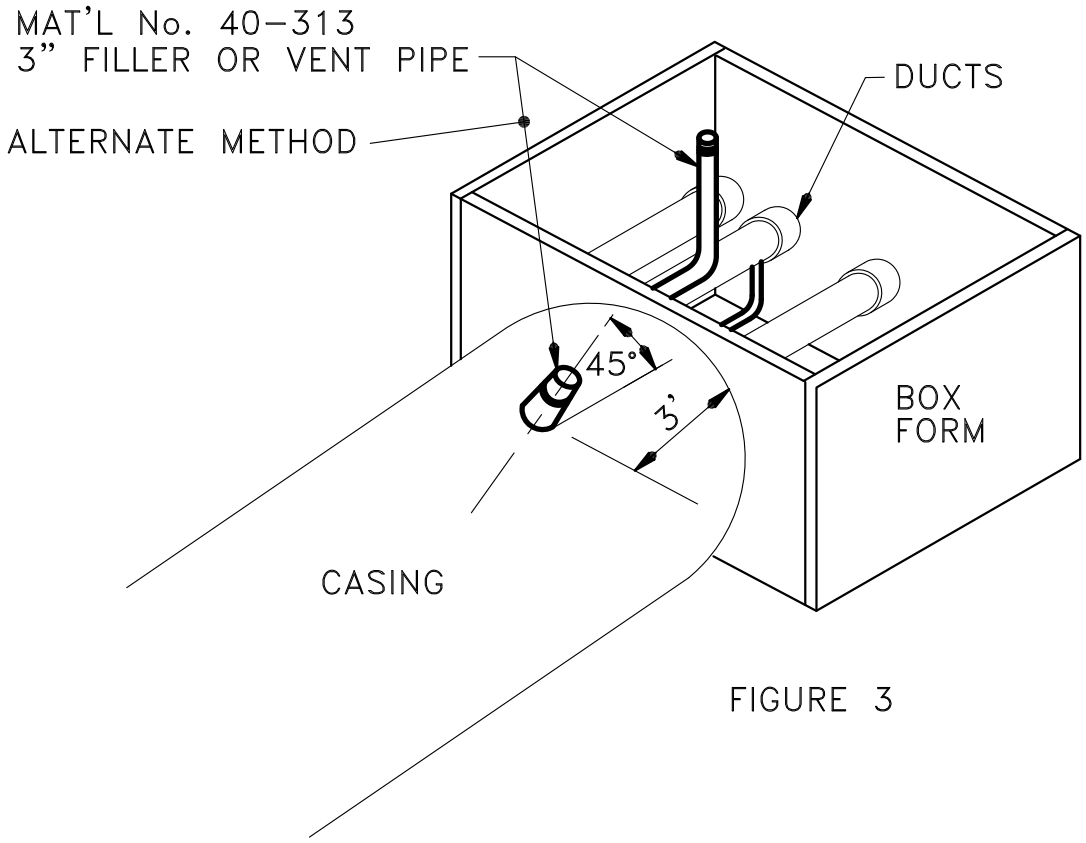

FIGURE 3

b) Alternate Method – "Hand Grout"

Install the filler and vent pipe (See Sheet 5 of 5) into the casing. Use grout and pieces of brick to build a 12" cement bulkhead just inside the casing end. Seal the entire opening.

CITY OF BALTIMORE 1797	APPROVED: Rachel L. Baker CHIEF, CONDUIT DIVISION Khalil Zaied DIRECTOR, DEPARTMENT OF TRANSPORTATION	CITY OF BALTIMORE DEPARTMENT OF TRANSPORTATION CONDUIT DIVISION	ISSUED	REVISED	REVISED
			8 / 2010		
		CONDUIT SECTIONS IN CASING PIPE	STANDARD NO. BC 803.01-4		
			SCALE : NONE	SHEET 4 OF 5	

B. GROUT PLACEMENT (Continued)

2. Install two threaded 3" steel 90 degree 12" radius elbows with caps. Elbows are to pass through the concrete seals and be used as filler and vent pipes (See Figure #4).

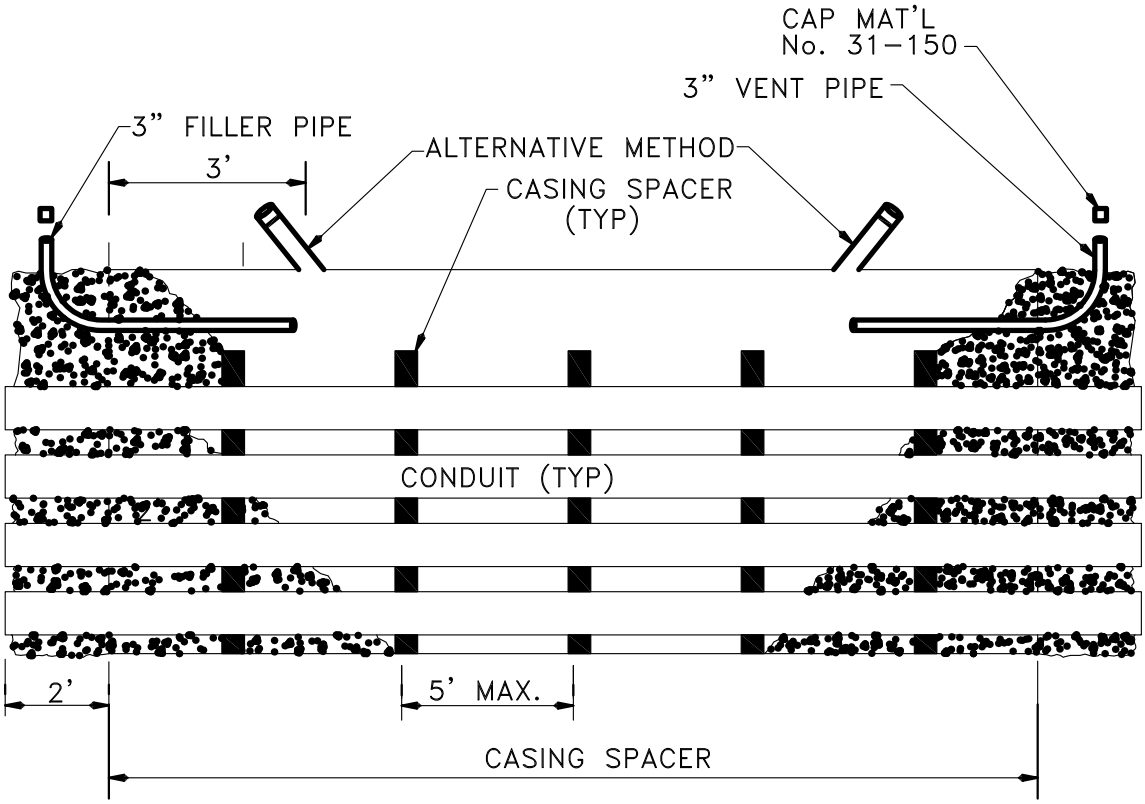

FIGURE 4

3. Only "High Density Cable Backfill" shall be pumped into the casing. Grout is available from "LaFARGE," previously called Genstar or an approved equal. (See Baltimore City Std. 803.01-1 to determine amount of grout needed.)

4. All trucks containing the required grout filler shall be on the job site before pumping operation is started.

5. A "Squeeze-Crete" concrete pump shall be used to pump the grout into the casing. This type pump is available at Concrete Placing Services Inc, 708 Crain Hgwy. The pump shall be operated at a slow, continuous pace exercising care to avoid pressure readings of over 30 PSI. Pumping too fast could jam the material and stop the pumping operation prematurely and excessive pressure could collapse the ducts.

6. Grout shall be pumped into the filler pipe until the grout is forced out the vent pipe. (Air and water will probably precede the grout.)

7. When casing is filled, cap both the filler and vent pipes. be sure the pumping operation has stopped before the vent cap is put on. Do not give an "extra shot" once pumping of grout has stopped.

8. Rod, clean and mandrill casing duct before extending or connecting them to adjacent ducts, The mandrill shall be ½" smaller then the ducts I.D.

CITY OF BALTIMORE 1797	APPROVED: Richard L. Baker CHIEF, CONDUIT DIVISION Khalil Zaied DIRECTOR, DEPARTMENT OF TRANSPORTATION	CITY OF BALTIMORE DEPARTMENT OF TRANSPORTATION CONDUIT DIVISION	ISSUED	REVISED	REVISED
			8 / 2010		
		CONDUIT SECTIONS IN CASING PIPE	STANDARD NO. BC 803.01-5		
			SCALE : NONE	SHEET 5 OF 5	

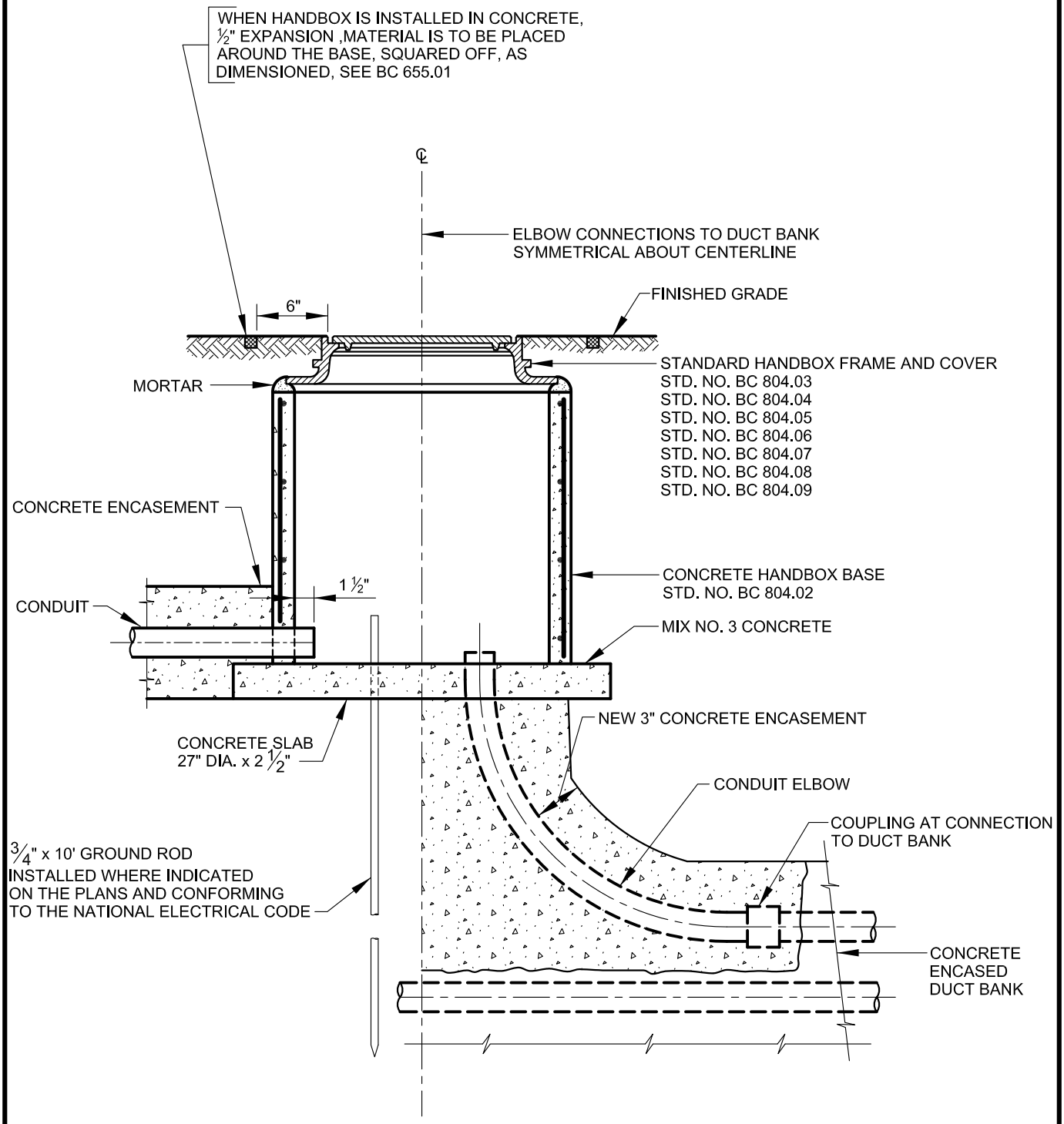

CONNECTION TO LIGHT STANDARDS

CONNECTION TO EXISTING DUCT BANK

APPROVED :

CHIEF, CONDUIT DIVISION

DIRECTOR, DEPARTMENT OF TRANSPORTATION

CITY OF BALTIMORE
DEPARTMENT OF TRANSPORTATION
CONDUIT DIVISION

ISSUED	REVISED	REVISED
8 / 2010		

HANDBOX-CONDUIT TYPICAL INSTALLATION

STANDARD NO. BC 804.01

SCALE : NONE

SHEET 1 OF 1

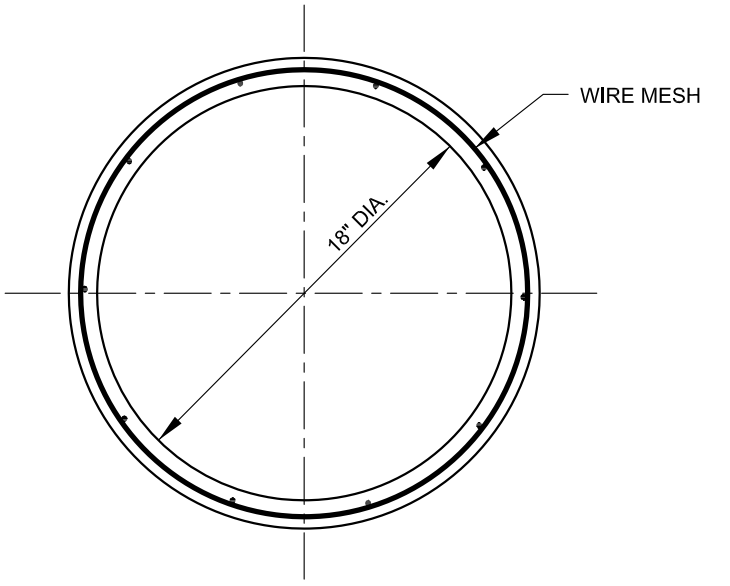

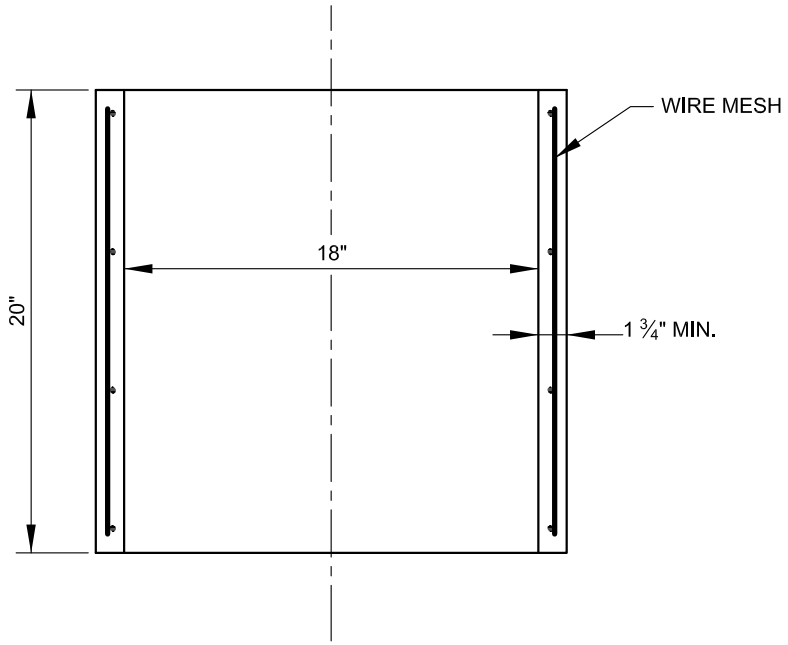

APPROVED :

CHIEF, CONDUIT DIVISION

DIRECTOR, DEPARTMENT OF TRANSPORTATION

CITY OF BALTIMORE
DEPARTMENT OF TRANSPORTATION
CONDUIT DIVISION

HANDBOX - CONDUIT
STANDARD CONCRETE BASE

ISSUED	REVISED	REVISED
8 / 2010		

STANDARD NO.
BC 804.02

SCALE : NONE

SHEET 1 OF 1

NOTE: MATERIAL SHALL BE CAST
IRON 21,000 PSI
TENSILE STRENGTH

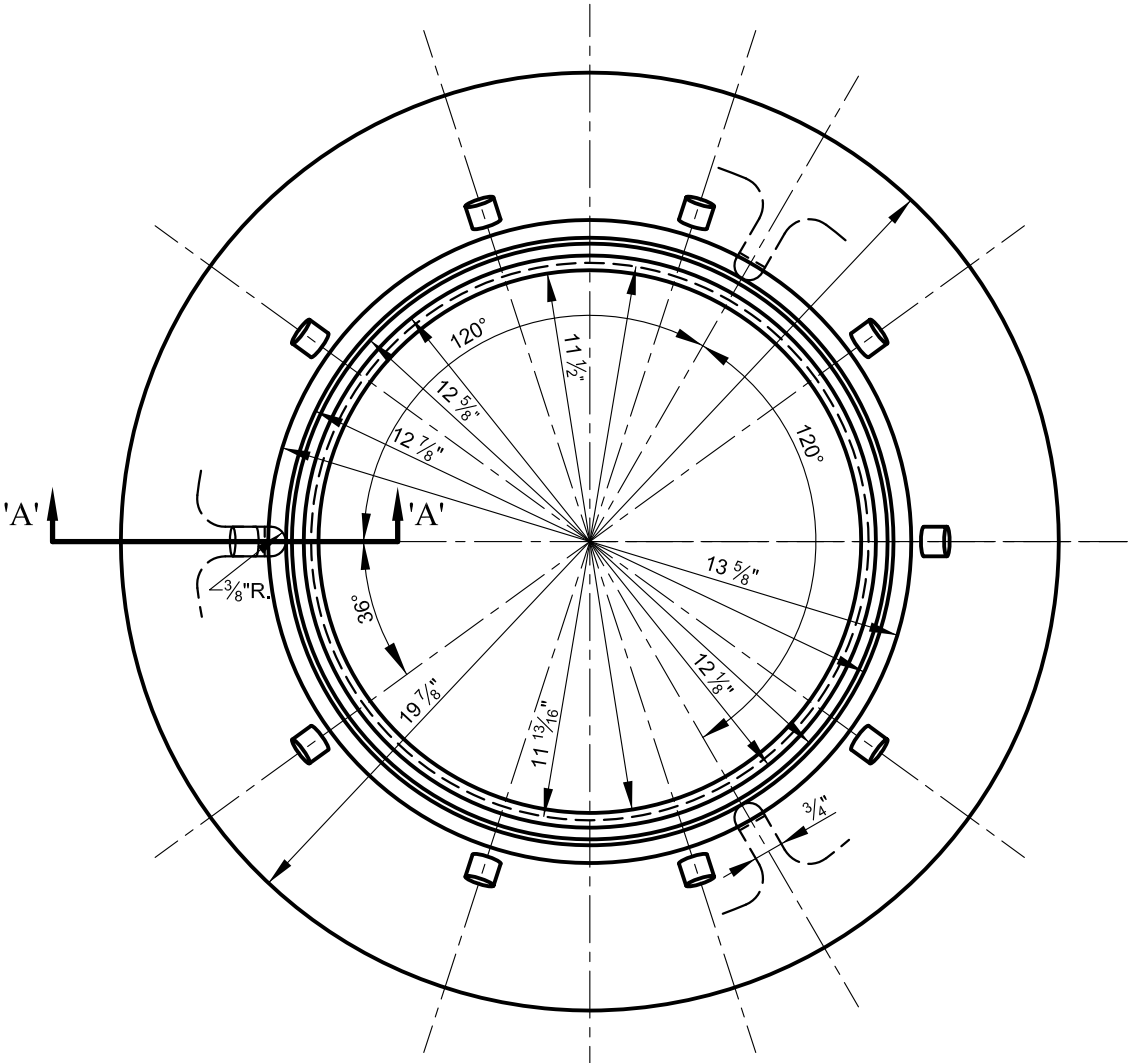

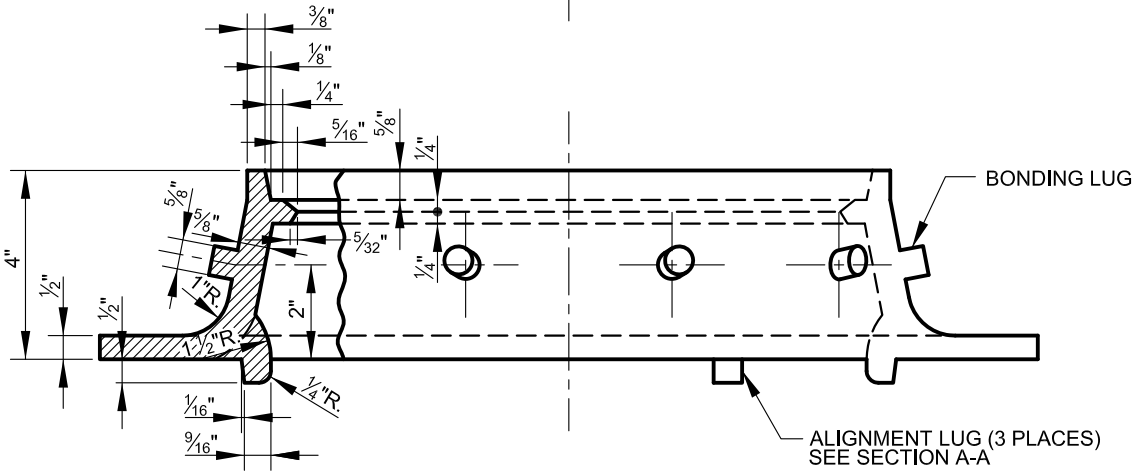

A-A ELEVATION & SECTION

NOTE:
AVERAGE WEIGHT OF FRAME 57.75 LBS.

APPROVED :

CHIEF, CONDUIT DIVISION

DIRECTOR, DEPARTMENT OF TRANSPORTATION

CITY OF BALTIMORE
DEPARTMENT OF TRANSPORTATION
CONDUIT DIVISION

ISSUED	REVISED	REVISED
8 / 2010		

HANDBOX - CONDUIT
STANDARD FRAME

STANDARD NO.
BC 804.03

SCALE : NONE | SHEET 1 OF 1

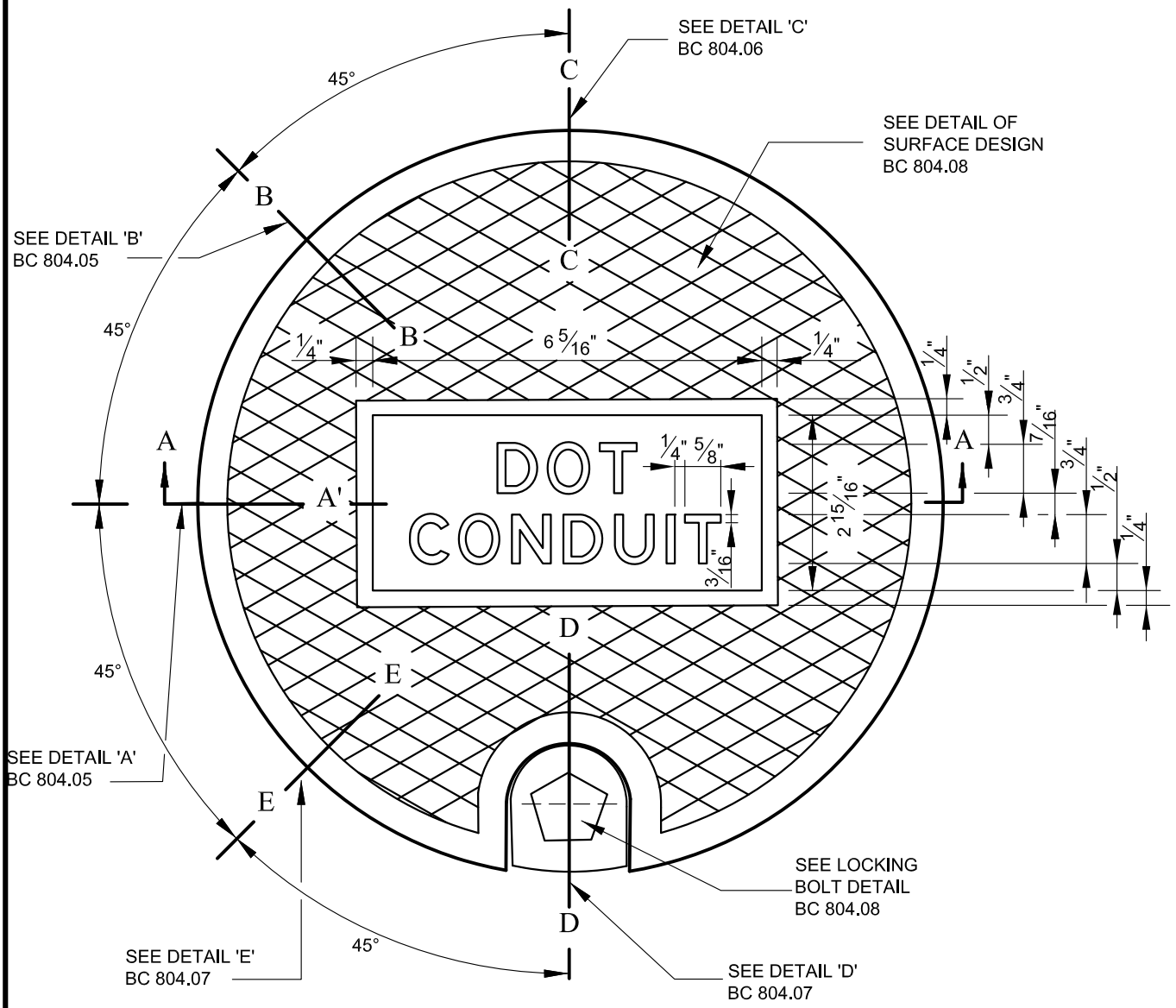

PLAN

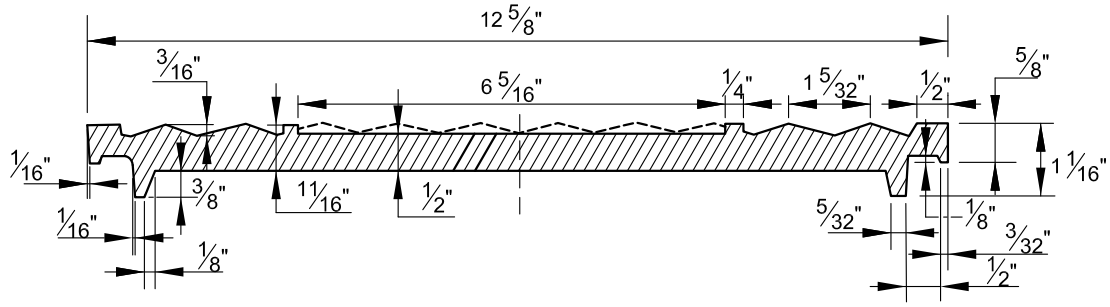

SECTION A-A

NOTE:
HANDBOX COVER MATERIAL SHALL BE CAST STEEL,
21,000 PSI TENSILE STRENGTH. WEIGHT = 21 LBS.

APPROVED :

CHIEF, CONDUIT DIVISION

DIRECTOR, DEPARTMENT OF TRANSPORTATION

CITY OF BALTIMORE
DEPARTMENT OF TRANSPORTATION
CONDUIT DIVISION

ISSUED	REVISED	REVISED
8 / 2010		

HANDBOX - CONDUIT STANDARD COVER

STANDARD NO.
BC 804.04

SCALE : NONE

SHEET 1 OF 1

PLAN-BOTTOM VIEW

SECTION B-B

DETAIL 'B'

PLAN-BOTTOM VIEW

SECTION A-A'

DETAIL 'A'

APPROVED:

CHIEF, CONDUIT DIVISION

DIRECTOR, DEPARTMENT OF TRANSPORTATION

CITY OF BALTIMORE
DEPARTMENT OF TRANSPORTATION
CONDUIT DIVISION

HANDBOX - CONDUIT STANDARD COVER DETAILS 'A' & 'B'

ISSUED	REVISED	REVISED
8 / 2010		

STANDARD NO.
BC 804.05

SCALE : NONE

SHEET 1 OF 1

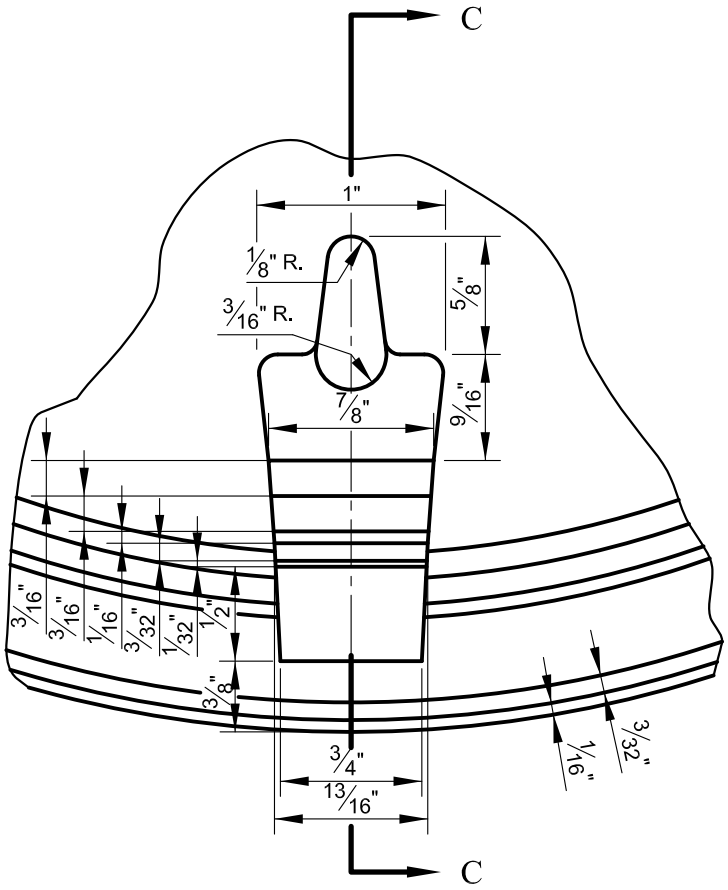

PLAN - BOTTOM VIEW

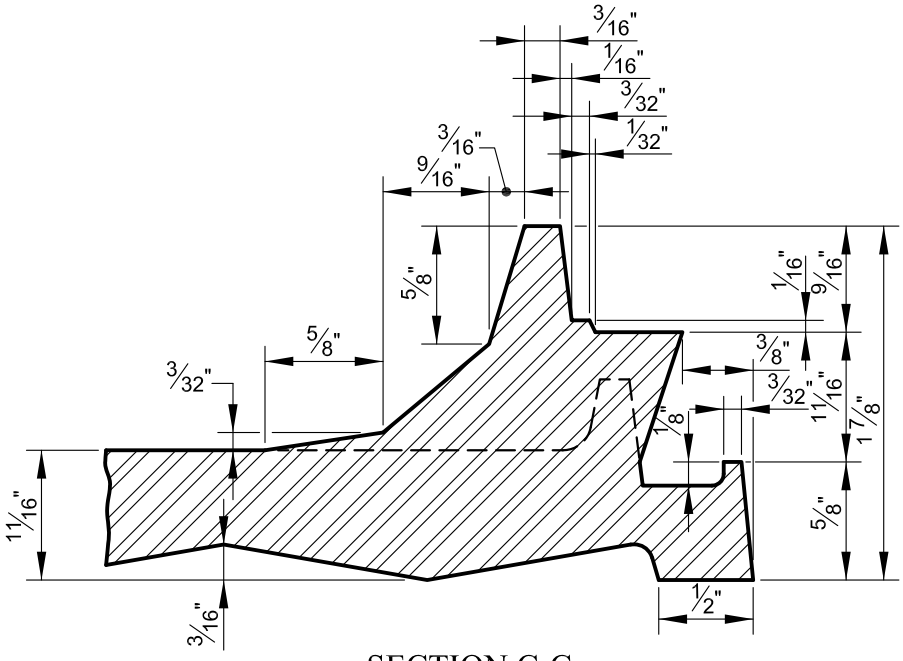

SECTION C-C

DETAIL 'C'

APPROVED: Richard L. Barton, CHIEF, CONDUIT DIVISION; Khalil Zaied, DIRECTOR, DEPARTMENT OF TRANSPORTATION	CITY OF BALTIMORE DEPARTMENT OF TRANSPORTATION CONDUIT DIVISION	ISSUED	REVISED	REVISED
		8 / 2010		
	HANDBOX - CONDUIT STANDARD COVER DETAIL 'C'	STANDARD NO. BC 804.06		
		SCALE : NONE	SHEET 1 OF 1	

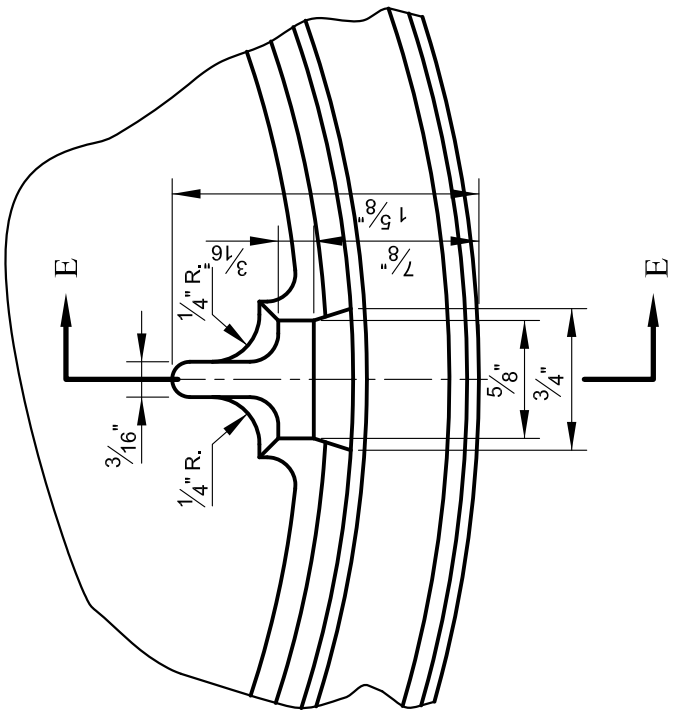

PLAN - BOTTOM VIEW

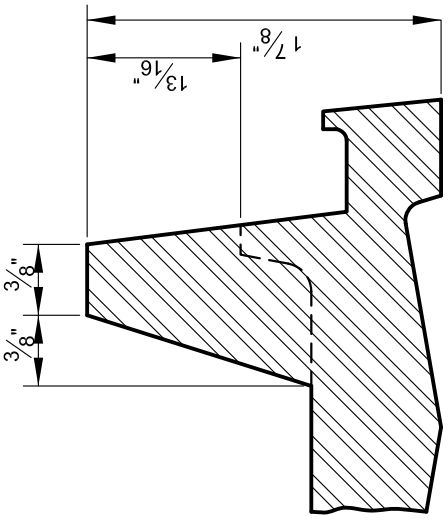

SECTION E-E

DETAIL 'E'

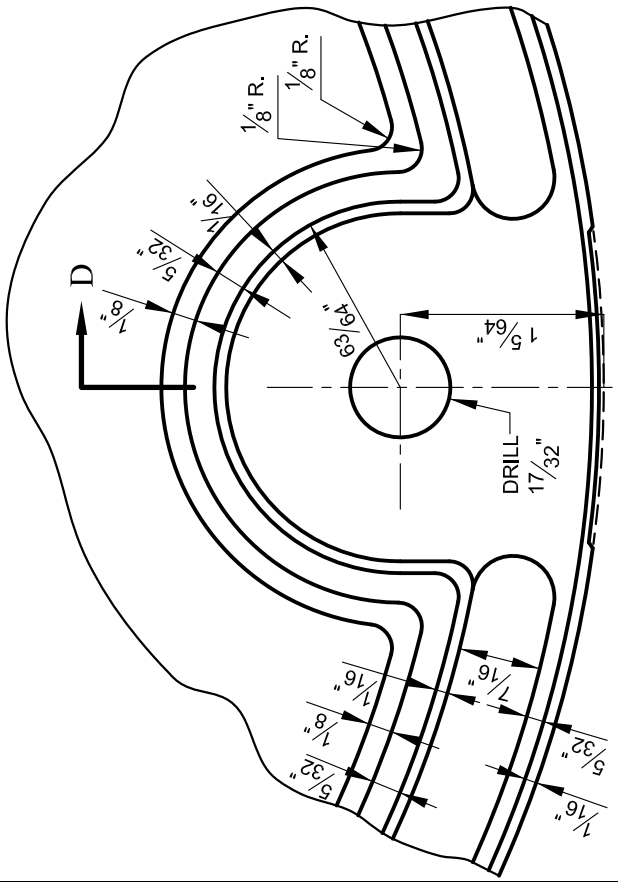

PLAN - BOTTOM VIEW

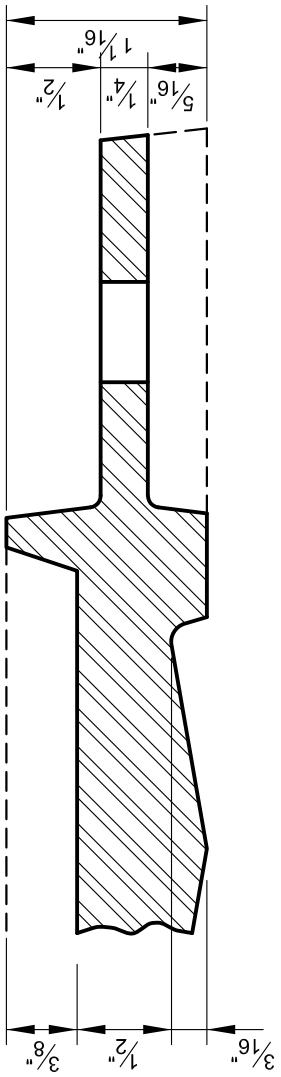

SECTION D-D

DETAIL 'D'

CITY OF BALTIMORE 1797

APPROVED:

CHIEF, CONDUIT DIVISION

DIRECTOR, DEPARTMENT OF TRANSPORTATION

CITY OF BALTIMORE
DEPARTMENT OF TRANSPORTATION
CONDUIT DIVISION

ISSUED	REVISED	REVISED
8 / 2010		

HANDBOX - CONDUIT STANDARD COVER DETAILS 'D' & 'E'

STANDARD NO.
BC 804.07

SCALE : NONE

SHEET 1 OF 1

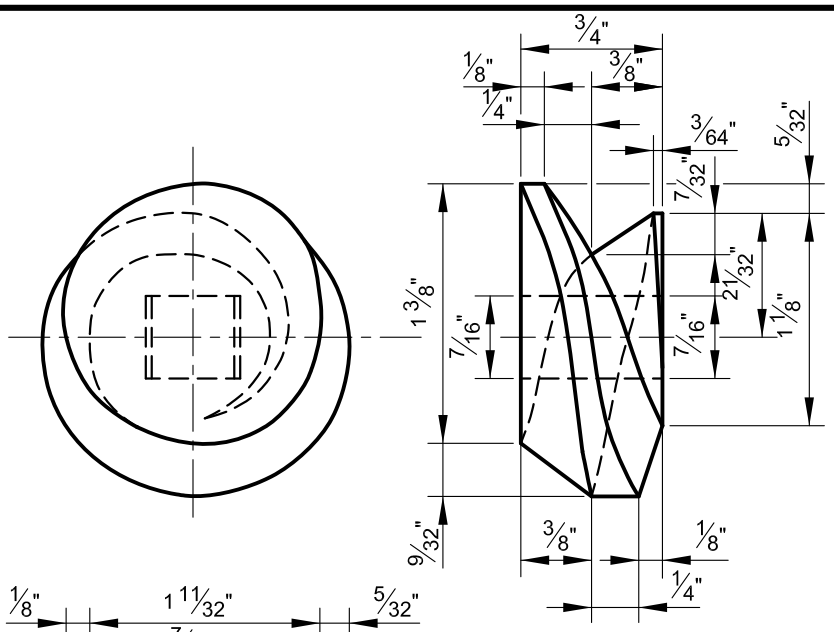

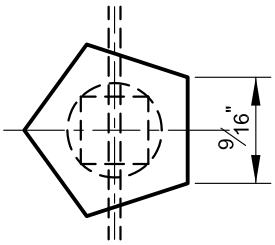

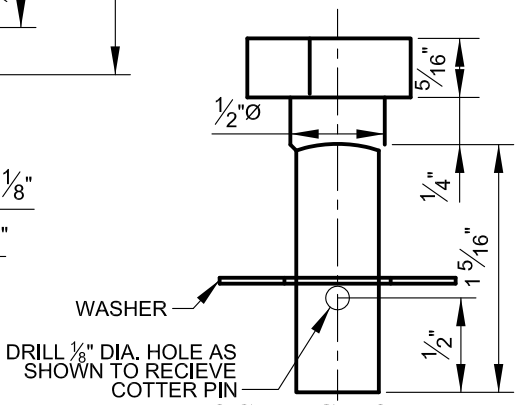

LOCKING BOLT

(BRASS - 1 REQUIRED)

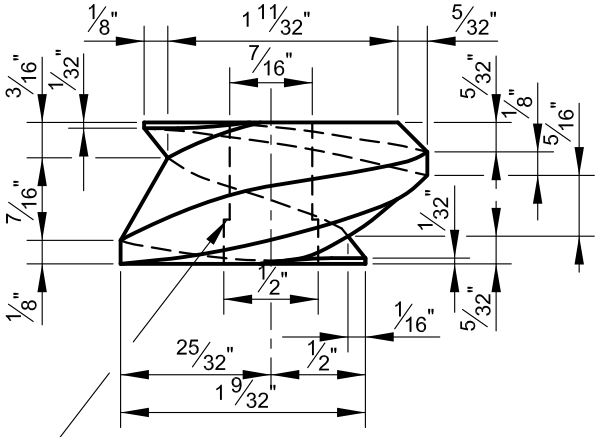

LOCK WORM

(CAST IRON - 1 REQUIRED)

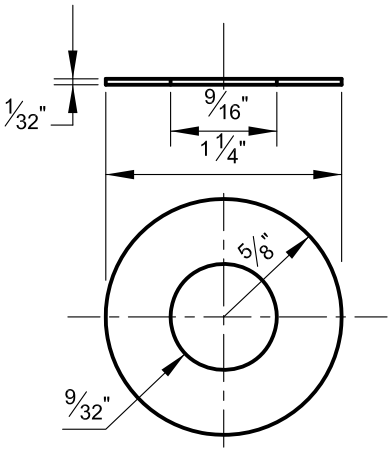

WASHER

(BRONZE - 2 REQUIRED)

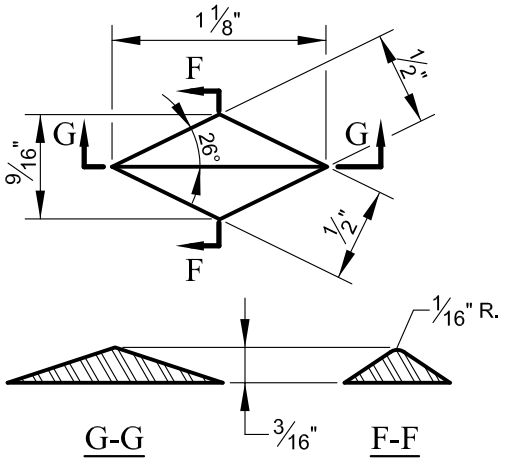

SURFACE DESIGN DETAIL

APPROVED:

CHIEF, CONDUIT DIVISION

DIRECTOR, DEPARTMENT OF TRANSPORTATION

CITY OF BALTIMORE
DEPARTMENT OF TRANSPORTATION
CONDUIT DIVISION

ISSUED	REVISED	REVISED
8 / 2010		

HANDBOX - CONDUIT STANDARD COVER LOCKING BOLT AND SURFACE DESIGN DETAILS

STANDARD NO.
BC 804.08

SCALE : NONE

SHEET 1 OF 1

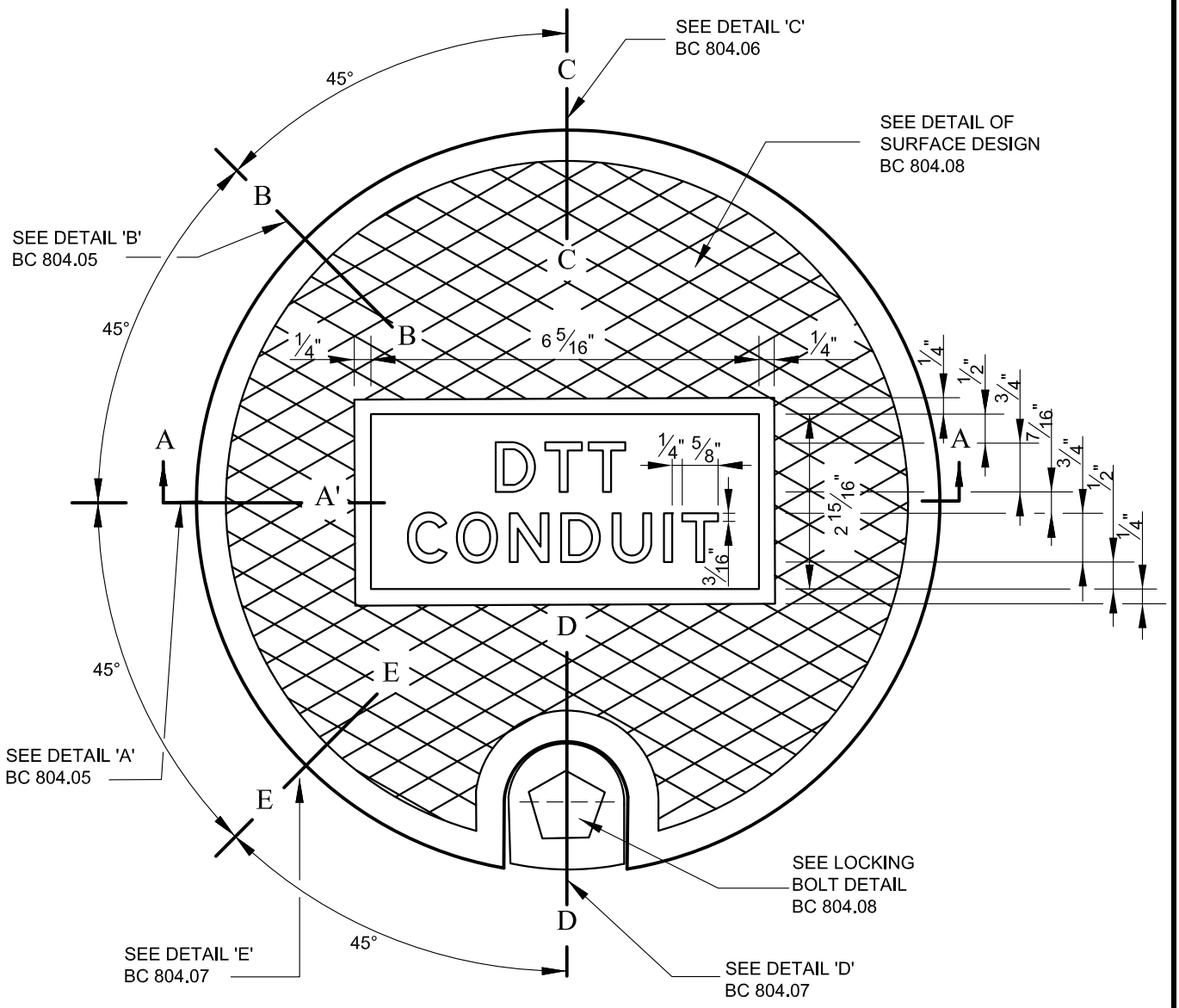

PLAN

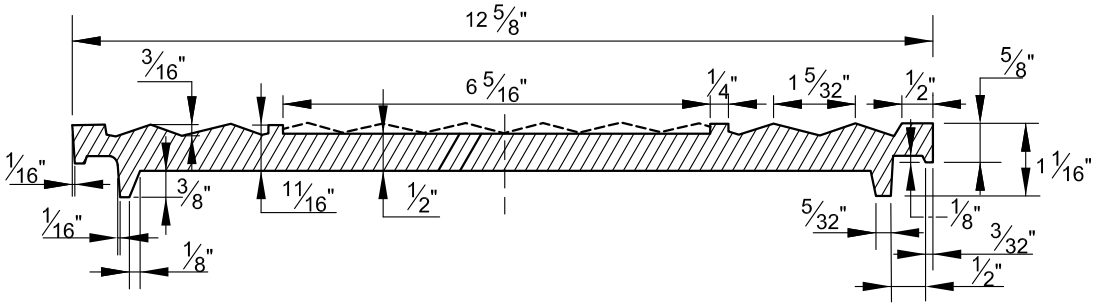

SECTION A-A

NOTE:
HANDBOX COVER MATERIAL SHALL BE CAST STEEL, 21,000 PSI TENSILE STRENGTH. WEIGHT = 21 LBS.

APPROVED:

DIVISION CHIEF, TRANSPORTATION ENGINEERING AND CONSTRUCTION

DIRECTOR, DEPARTMENT OF TRANSPORTATION

CITY OF BALTIMORE
DEPARTMENT OF TRANSPORTATION
TRANSPORTATION ENGINEERING AND CONSTRUCTION

ISSUED	REVISED	REVISED
8 / 2010		

STANDARD HANDBOX COVER - DTT

STANDARD NO.
BC 804.09

SCALE : NONE

SHEET 1 OF 1

INSTALL ½" EXTERIOR GRADE MARINE PLYWOOD BACKBOARD PAINTED GRAY

* MEASURING FROM THE CABINET, NOT THE BACKBOARD

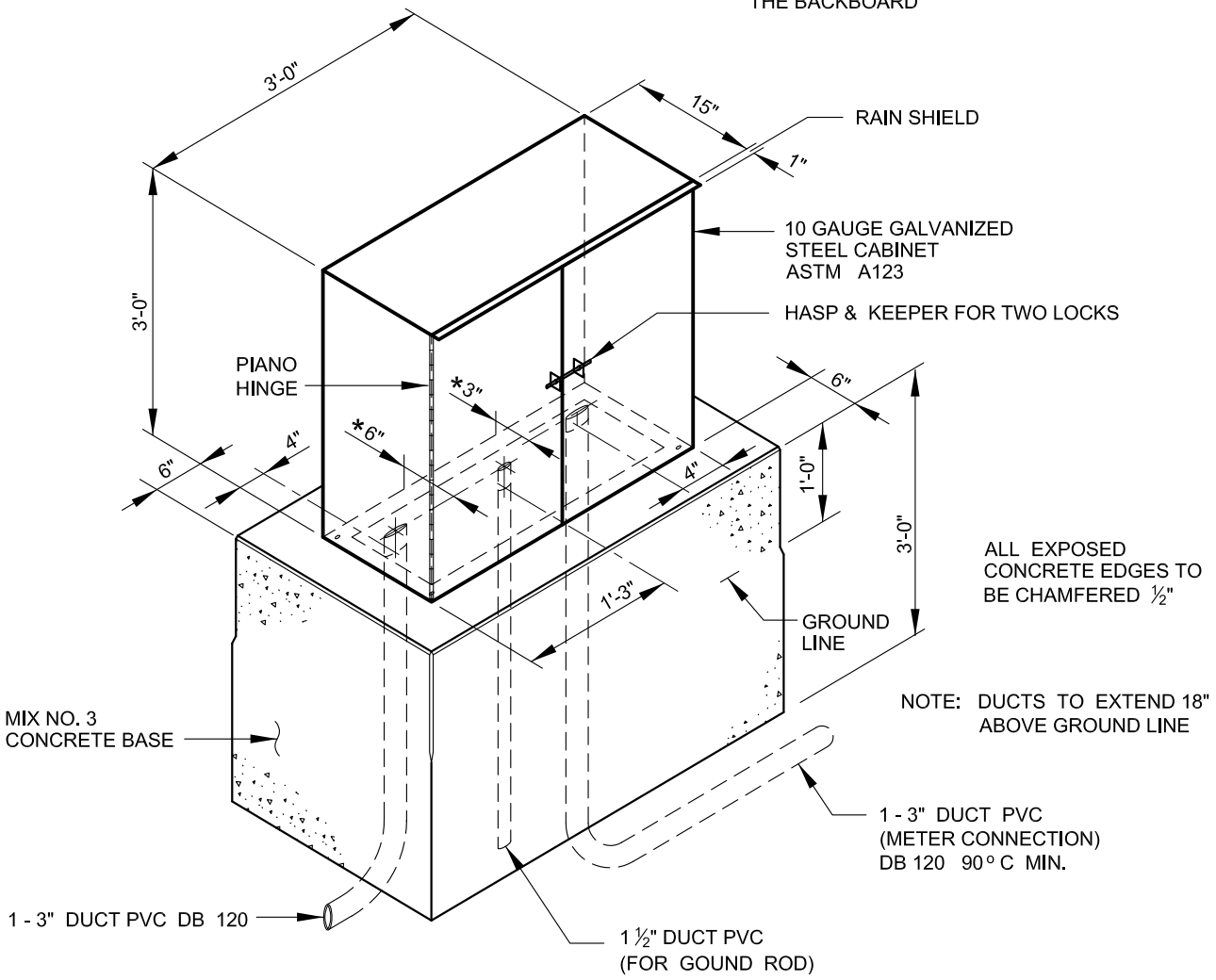

N.E.M.A. 3R FREE STANDING METER CABINET

NTS

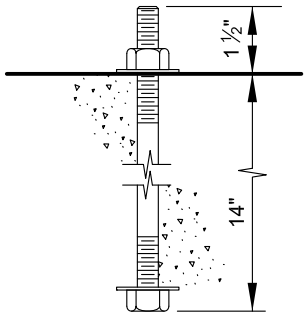

BOLT SIZE ½" STAINLESS STEEL

ANCHOR BOLT DETAIL

NTS

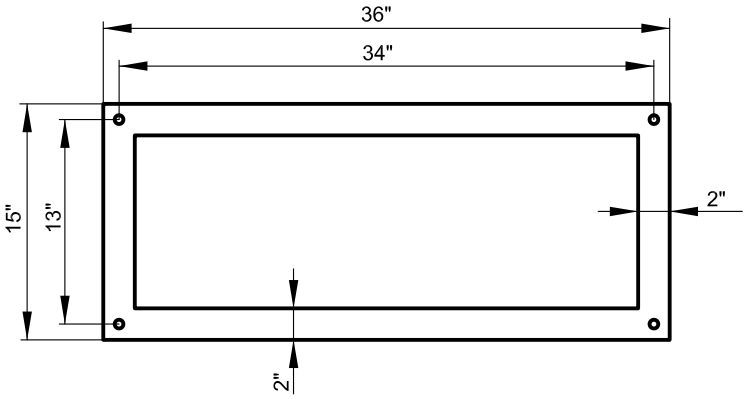

CABINET BASE DETAIL

NTS

APPROVED:

DIVISION CHIEF, TRANSPORTATION ENGINEERING AND CONSTRUCTION

DIRECTOR, DEPARTMENT OF TRANSPORTATION

CITY OF BALTIMORE
DEPARTMENT OF TRANSPORTATION
TRANSPORTATION ENGINEERING AND CONSTRUCTION

ISSUED	REVISED	REVISED
8 / 2010		

METER CABINET FOR ELECTRICAL SERVICE

STANDARD NO.
BC 804.10

SCALE : NONE

SHEET 1 OF 1

SELECTOR SWITCH POSITION

1 - OFF
2 - PHOTOCELL CONTROL
3 - TIME SWITCH CONTROL WITH 24 HR MIN. RESERVE POWER SPRING MECHANISM
4 - MANUAL CONTROL

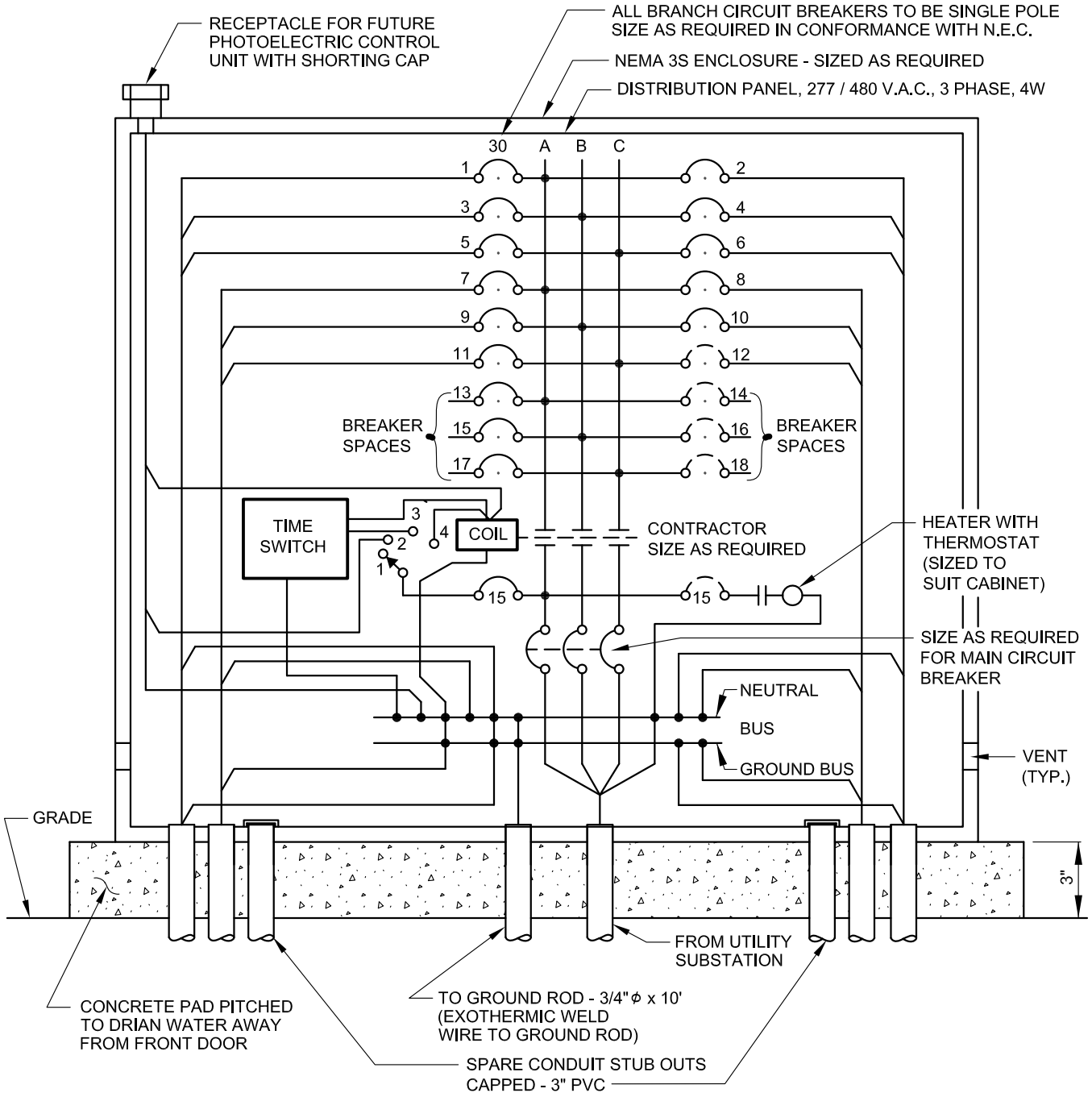

NOTES:

A - SIZE BRANCH CIRCUIT CONDUCTORS FOR 5 PERCENT MAXIMUM VOLTAGE DROP.

B - MINIMUM WIRE SIZE - #12 THWN FOR CONTROLS

C - BASE SPARES ON 20% OF ACTIVE CIRCUITS BUT NOT LESS THAN THREE SPARES

CIRCUIT	LOAD	* VOLT DROP
1.		
2.		
3.		
4.		
ETC.		

* MAXIMUM VOLT DROP ON 277 VOLT CIRCUIT IS 13.85 VOLTS (5%)

APPROVED:

DIVISION CHIEF, TRANSPORTATION ENGINEERING AND CONSTRUCTION

DIRECTOR, DEPARTMENT OF TRANSPORTATION

CITY OF BALTIMORE
DEPARTMENT OF TRANSPORTATION
TRANSPORTATION ENGINEERING AND CONSTRUCTION

ROADWAY LIGHTING DISTRIBUTION PANEL SCHEMATIC DIAGRAM - 480Y/277 - UNMETERED

ISSUED	REVISED	REVISED
8 / 2010		

STANDARD NO.
BC 804.11

SCALE : NONE

SHEET 1 OF 1

NOTE:
6063 ASSEMBLY .375 WALL OR LESS
TO BE HEAT TREATED AFTER WELDING

8" x 6" x 22'-6" 0.188 WALL THICKNESS

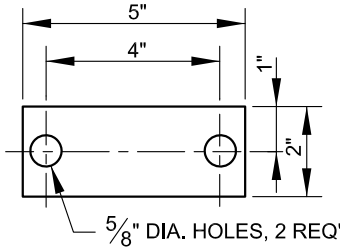

LOWER POLE PLATE COVER

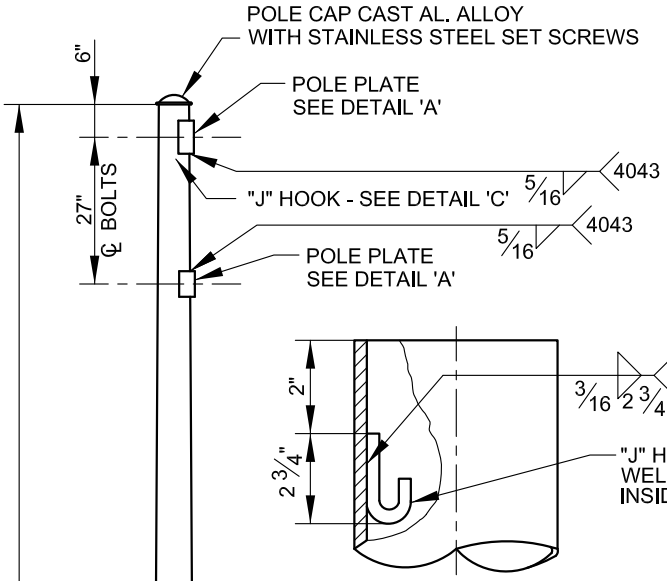

DETAIL 'C'

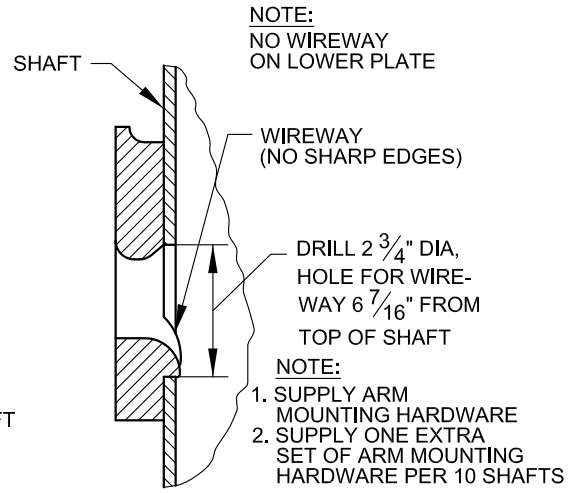

A-A CUT DETAIL
POLE PLATE

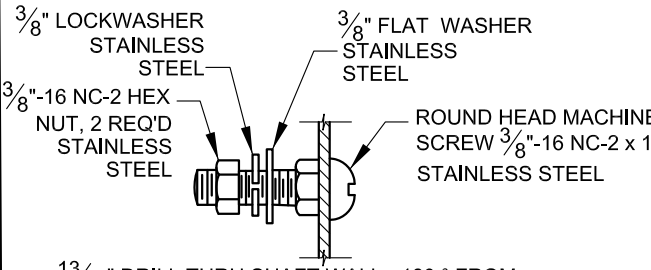

DETAIL 'D'

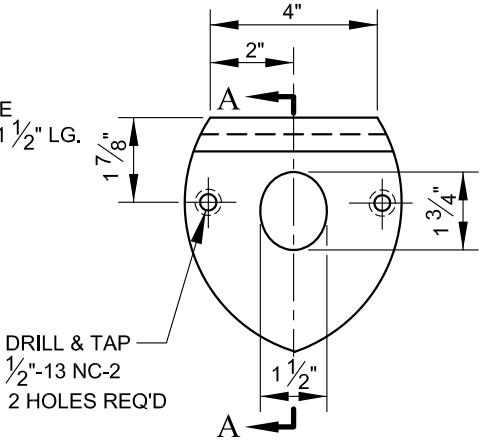

DETAIL 'A'
POLE PLATE
356-T6 CAST AL. ALLOY

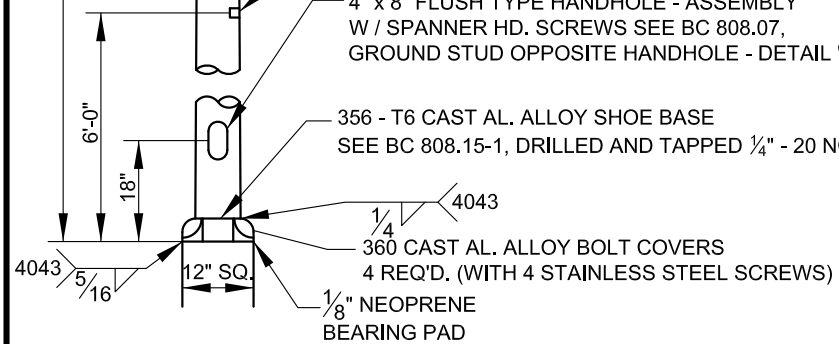

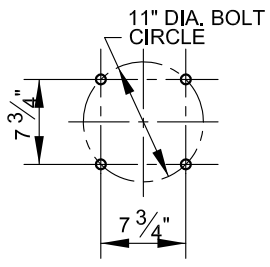

BASE BOLT CIRCLE

APPROVED: Division Chief, Transportation Engineering and Construction; Director, Department of Transportation	CITY OF BALTIMORE DEPARTMENT OF TRANSPORTATION TRANSPORTATION ENGINEERING AND CONSTRUCTION	ISSUED: 8 / 2010; REVISED; REVISED
	TYPICAL LIGHT STANDARD 25' AW POLE	STANDARD NO. BC 808.01 SCALE : NONE; SHEET 1 OF 1

NOTE:
6063 ASSEMBLY .375 WALL OR LESS
TO BE HEAT TREATED AFTER WELDING

8" x 6" x 27'-6" 0.188 WALL THICKNESS

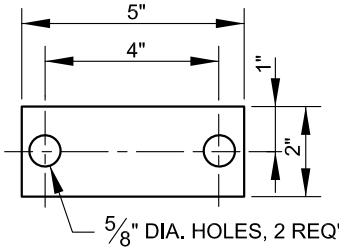

LOWER POLE PLATE COVER

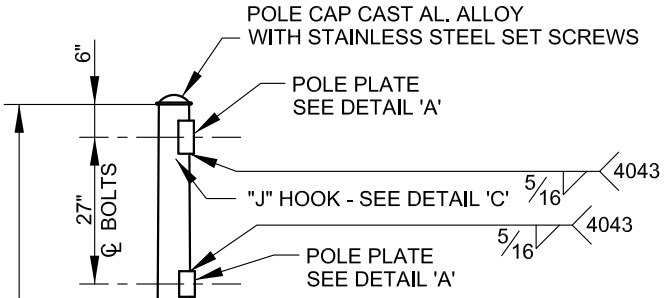

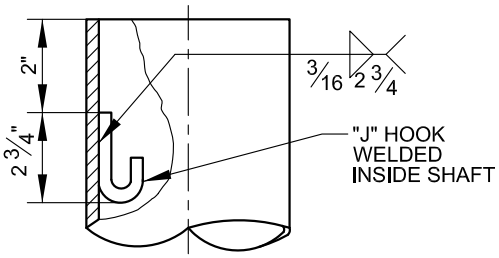

DETAIL 'C'

NOTE:
NO WIREWAY
ON LOWER PLATE

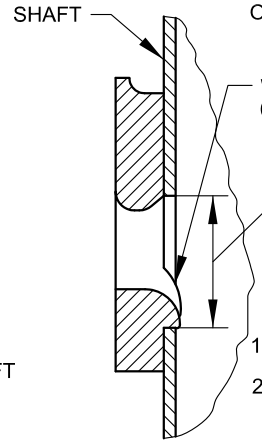

NOTE:
1. SUPPLY ARM MOUNTING HARDWARE
2. SUPPLY ONE EXTRA SET OF ARM MOUNTING HARDWARE PER 10 SHAFTS

A-A CUT DETAIL
POLE PLATE

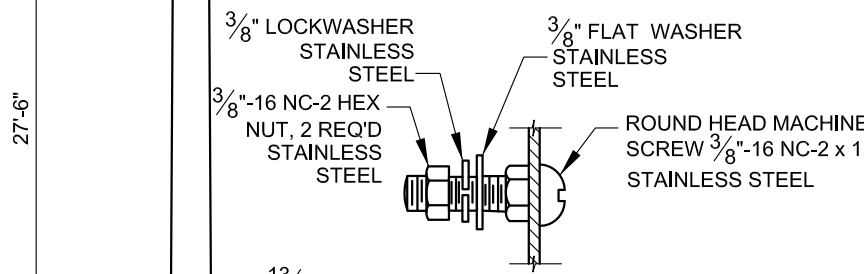

DETAIL 'D'

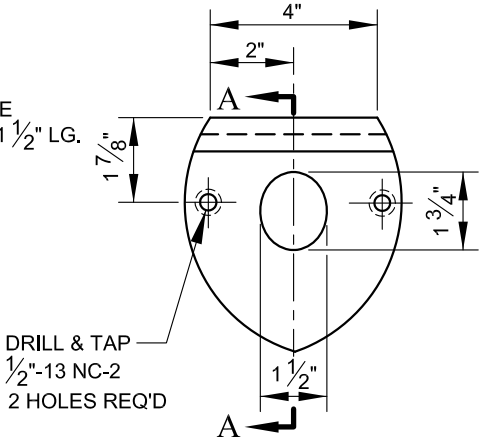

DETAIL 'A'
POLE PLATE
356-T6 CAST AL. ALLOY

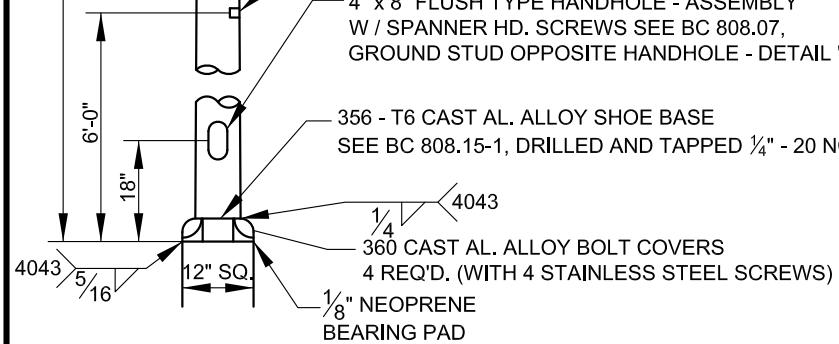

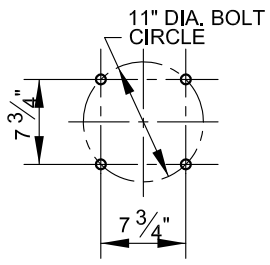

BASE BOLT CIRCLE

APPROVED:

DIVISION CHIEF, TRANSPORTATION ENGINEERING AND CONSTRUCTION

DIRECTOR, DEPARTMENT OF TRANSPORTATION

CITY OF BALTIMORE
DEPARTMENT OF TRANSPORTATION
TRANSPORTATION ENGINEERING AND CONSTRUCTION

ISSUED	REVISED	REVISED
8 / 2010		

TYPICAL LIGHT STANDARD
30' AW POLE

STANDARD NO.
BC 808.02-1

SCALE : NONE

SHEET 1 OF 2

NOTE:
6063 ASSEMBLY .375 WALL OR LESS
TO BE HEAT TREATED AFTER WELDING

8" x 6" x 27'-6" 0.188 WALL THICKNESS

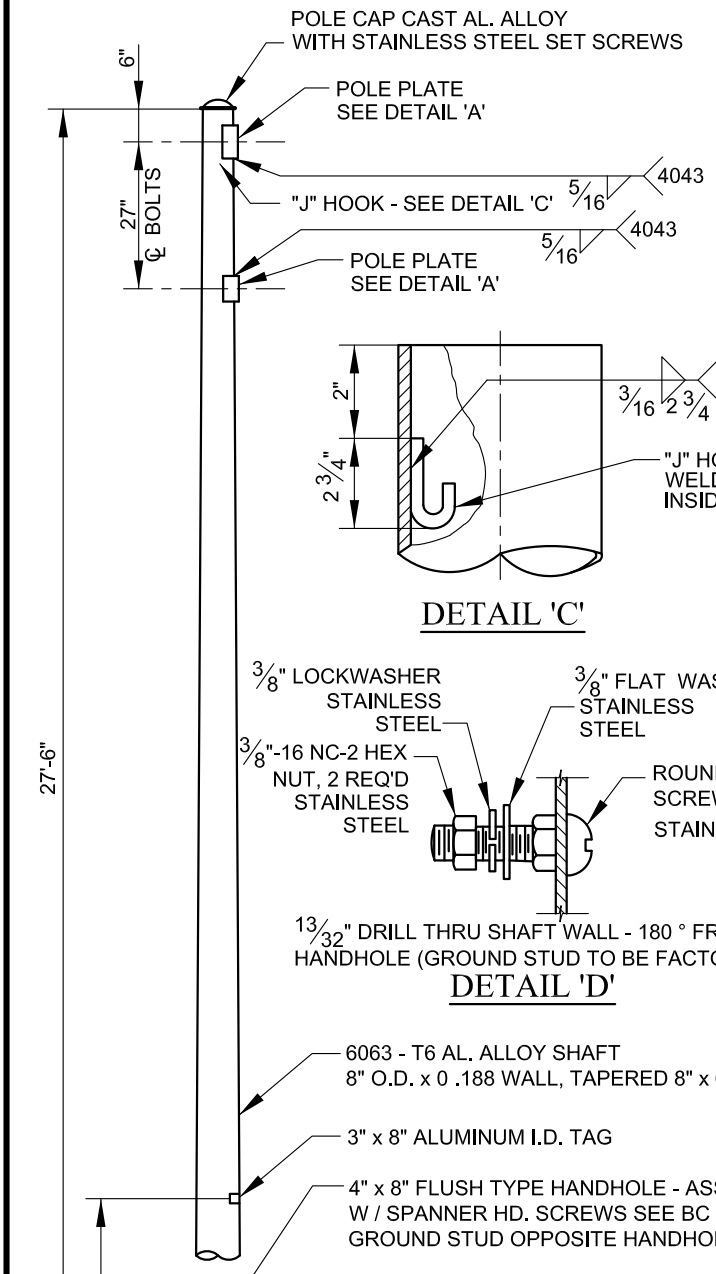

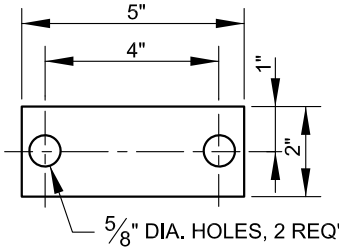

LOWER POLE PLATE COVER

DETAIL 'C'

NOTE:
NO WIREWAY
ON LOWER PLATE

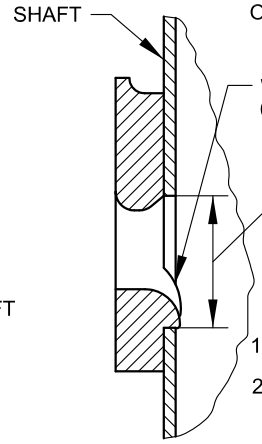

NOTE:
1. SUPPLY ARM MOUNTING HARDWARE
2. SUPPLY ONE EXTRA SET OF ARM MOUNTING HARDWARE PER 10 SHAFTS

A-A CUT DETAIL
POLE PLATE

DETAIL 'D'

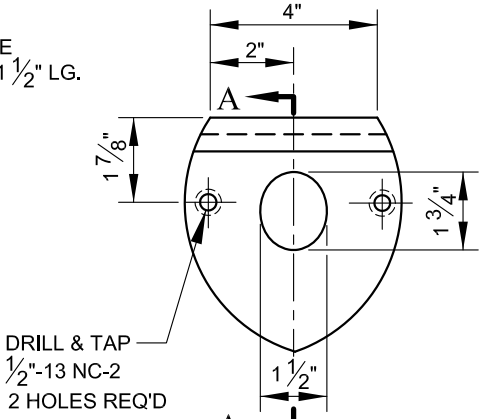

DETAIL 'A'
POLE PLATE
356-T6 CAST AL. ALLOY

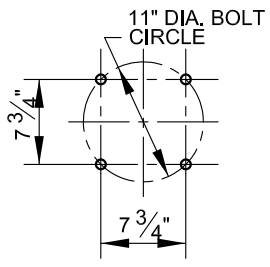

BASE BOLT CIRCLE

APPROVED:

DIVISION CHIEF, TRANSPORTATION ENGINEERING AND CONSTRUCTION

DIRECTOR, DEPARTMENT OF TRANSPORTATION

CITY OF BALTIMORE
DEPARTMENT OF TRANSPORTATION
TRANSPORTATION ENGINEERING AND CONSTRUCTION

TYPICAL LIGHT STANDARD
30' AW POLE ON
TRANSFORMER BASE

ISSUED	REVISED	REVISED
8 / 2010		

STANDARD NO.
BC 808.02-2

SCALE : NONE

SHEET 2 OF 2

CHART
No. 25
STEEL

BRACKET - ARM TYPE & SPREAD	SHAFT SIZE AND GAUGE	LUMINAIRE MOUNTING HEIGHT	LUMINAIRE MAX. WT. & PROJECTED AREA	
2' AND 6' SINGLE STRAIGHT PIPE	7.5" x 4.2" x 21'-6" 11 GAUGE	21'-0" NOM	75 LBS.	3.3 SQUARE FEET
4' AND 6' SINGLE UPSWEEP	7.5" x 4.2" x 22'-6" 11 GAUGE	25'-0" NOM		
8 FT. SINGLE UPSWEEP				
10 FT. "A" FRAME				
12 FT. "A" FRAME	7.5" x 4.2" x 22'-6" 7 GAUGE			
15 FT. "A" FRAME				
18 FT. "A" FRAME				
20 FT. "A" FRAME				

CHART
No. 30
STEEL

BRACKET - ARM TYPE & SPREAD	SHAFT SIZE AND GAUGE		LUMINAIRE MOUNTING HEIGHT	LUMINAIRE MAX. WT. & PROJECTED AREA	
6' SINGLE STRAIGHT PIPE OF ELLIPTICAL SECTION	8.0" x 3.52" x 32'-6" 11 GAUGE		32'-0" NOM	75 LBS.	3.3 SQUARE FEET
6 FT. SINGLE UPSWEEP	8" x 4.2" x 27'-6" 11 GAUGE FOR USE WITH ANCHOR BASE	8" x 4.4" x 25'-10" 11 GAUGE FOR USE WITH TRANSFORMER BASE	30'-0" NOM		
8 FT. SINGLE UPSWEEP					
10 FT. "A" FRAME					
12 FT. "A" FRAME	8" x 4.2" x 27'-6" 7 GAUGE FOR USE WITH ANCHOR BASE	8" x 4.4" x 25'-10" 7 GAUGE FOR USE WITH TRANSFORMER BASE			
15 FT. "A" FRAME					
18 FT. "A" FRAME					
20 FT. "A" FRAME					

APPROVED:

DIVISION CHIEF, TRANSPORTATION ENGINEERING AND CONSTRUCTION

DIRECTOR, DEPARTMENT OF TRANSPORTATION

CITY OF BALTIMORE
DEPARTMENT OF TRANSPORTATION
TRANSPORTATION ENGINEERING AND CONSTRUCTION

TYPICAL LIGHT STANDARD STEEL POLE DIMENSIONS

ISSUED	REVISED	REVISED
8 / 2010		

STANDARD NO. BC 808.03

SCALE : NONE

SHEET 1 OF 1

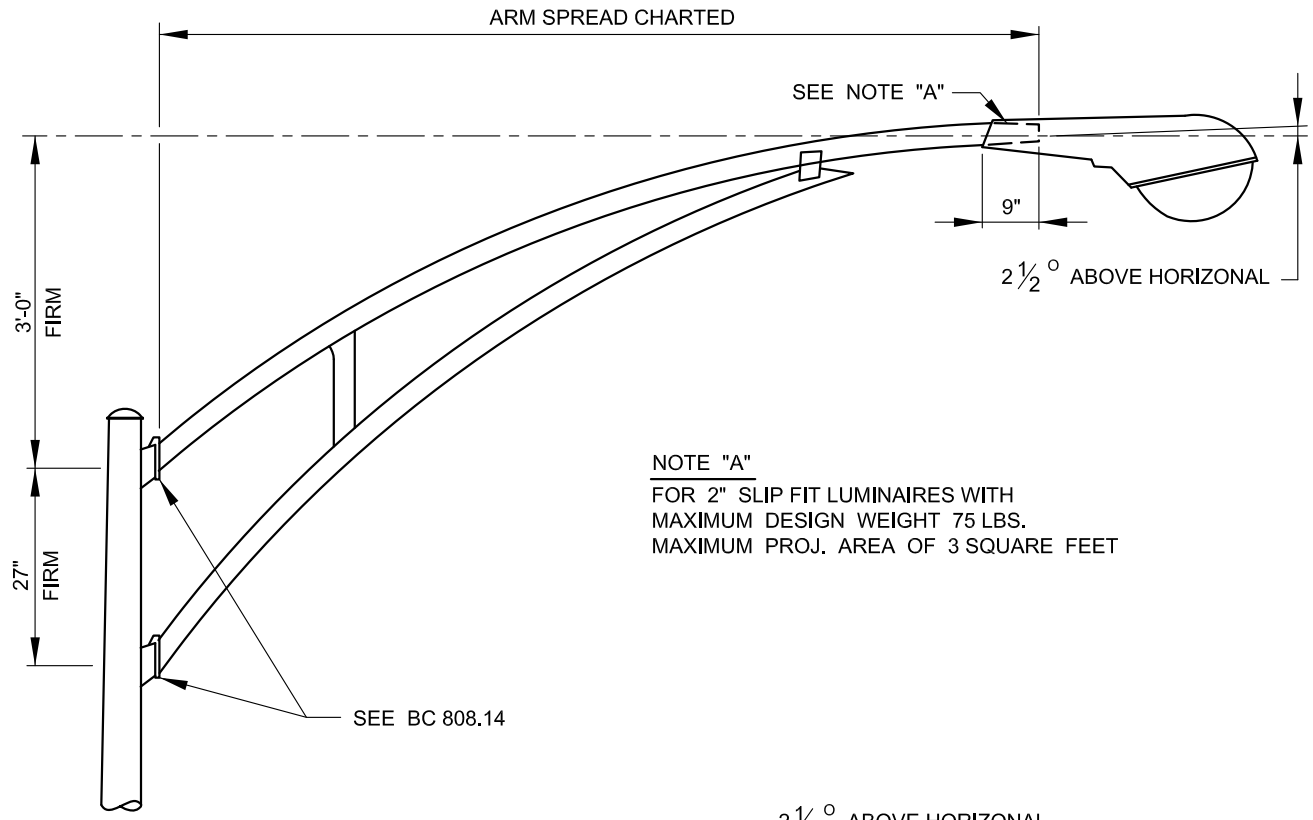

NOTE "A"

FOR 2" SLIP FIT LUMINAIRES WITH
MAXIMUM DESIGN WEIGHT 75 LBS.
MAXIMUM PROJ. AREA OF 3 SQUARE FEET

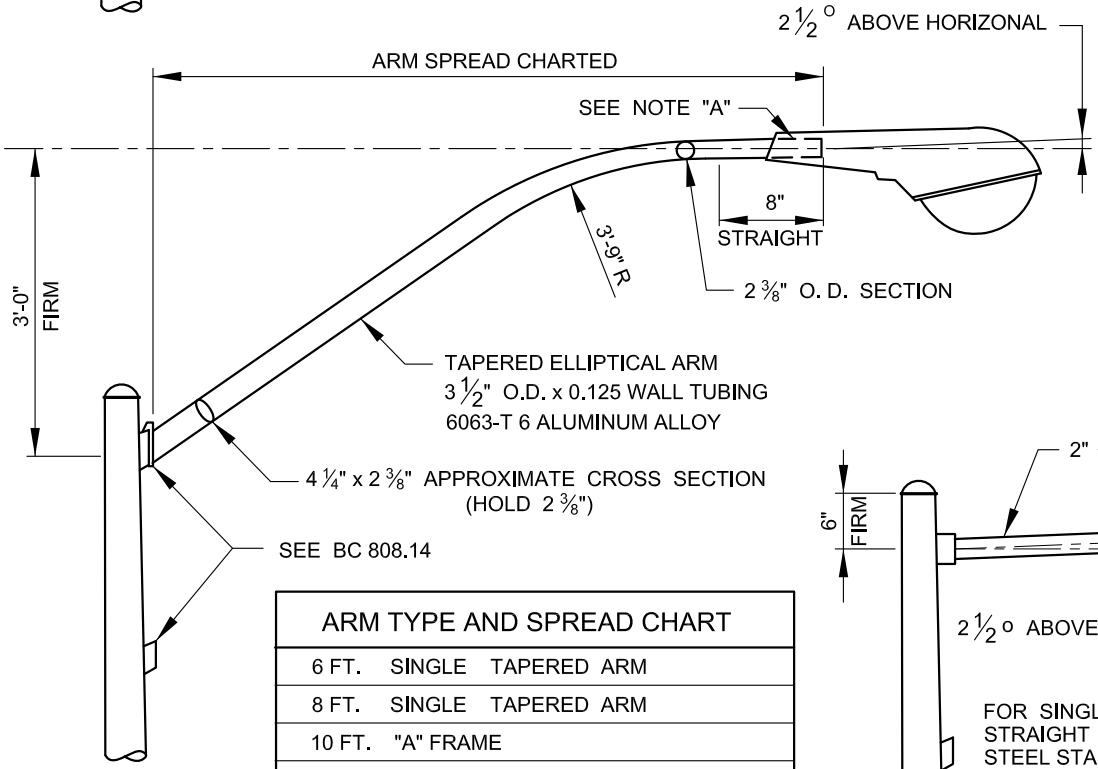

ARM TYPE AND SPREAD CHART
6 FT. SINGLE TAPERED ARM
8 FT. SINGLE TAPERED ARM
10 FT. "A" FRAME
12 FT. "A" FRAME
15 FT. "A" FRAME
18 FT. "A" FRAME SPECIAL DESIGN
20 FT. "A" FRAME SPECIAL DESIGN

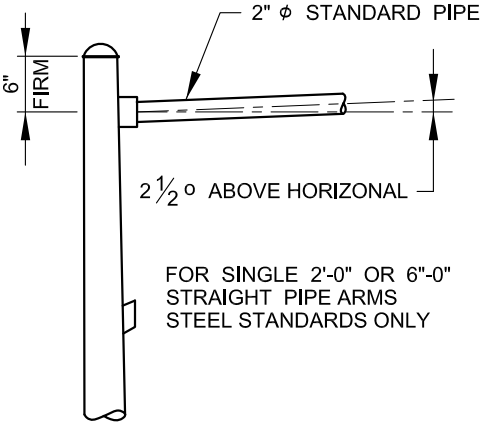

FOR SINGLE 2'-0" OR 6"-0"
STRAIGHT PIPE ARMS
STEEL STANDARDS ONLY

CHARLES CENTER POLES ONLY

APPROVED:

DIVISION CHIEF, TRANSPORTATION ENGINEERING AND CONSTRUCTION

DIRECTOR, DEPARTMENT OF TRANSPORTATION

CITY OF BALTIMORE
DEPARTMENT OF TRANSPORTATION
TRANSPORTATION ENGINEERING AND CONSTRUCTION

ISSUED	REVISED	REVISED
8 / 2010		

TYPICAL POLE ARMS FOR 25' AND 30' POLES

STANDARD NO.
BC 808.04

SCALE : NONE

SHEET 1 OF 1

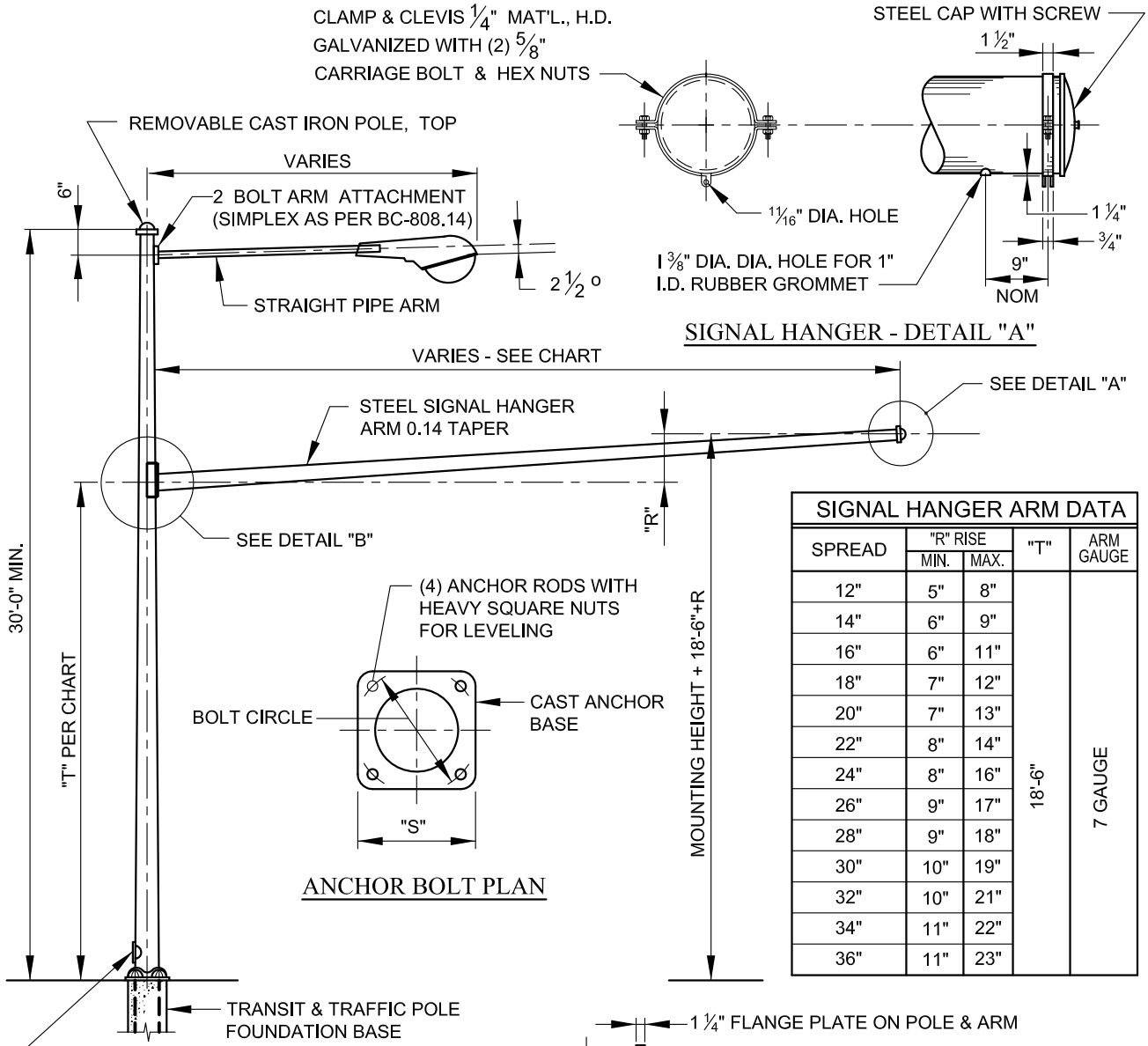

SIGNAL HANGER ARM DATA				
SPREAD	"R" RISE MIN.	"R" RISE MAX.	"T"	ARM GAUGE
12"	5"	8"	18'-6"	7 GAUGE
14"	6"	9"		
16"	6"	11"		
18"	7"	12"		
20"	7"	13"		
22"	8"	14"		
24"	8"	16"		
26"	9"	17"		
28"	9"	18"		
30"	10"	19"		
32"	10"	21"		
34"	11"	22"		
36"	11"	23"		

ANCHOR BOLT DATA				
POLE DIAMETER	POLE GAUGE	BOLT CIRCLE	SQUARE "S"	ANCHOR BOLTS
8"	7	11"	11 1/2"	1 1/4" x 48" LONG
8"	3	11"	11 1/2"	
9"	7	12 1/2"	12 3/4"	
10"	7	13 1/2"	14 1/8"	1 1/2" x 60" LONG
11"	7	15"	15 5/8"	
12"	7	16"	17"	
13"	7	18"	18 1/2"	
14"	7	20"	20 1/2"	
14"	3	20"	20 1/2"	1 3/4" x 90" LONG

SEE SPECIFICATIONS AND SPECIAL PROVISIONS FOR MATERIALS & FINISH

APPROVED:

DIVISION CHIEF, TRANSPORTATION ENGINEERING AND CONSTRUCTION

DIRECTOR, DEPARTMENT OF TRANSPORTATION

CITY OF BALTIMORE
DEPARTMENT OF TRANSPORTATION
TRANSPORTATION ENGINEERING AND CONSTRUCTION

ISSUED	REVISED	REVISED
8 / 2010		

COMBINATION POLE FOR LIGHT STANDARD AND TRAFFIC SIGNALS

STANDARD NO. BC 808.05

SCALE : NONE

SHEET 1 OF 1

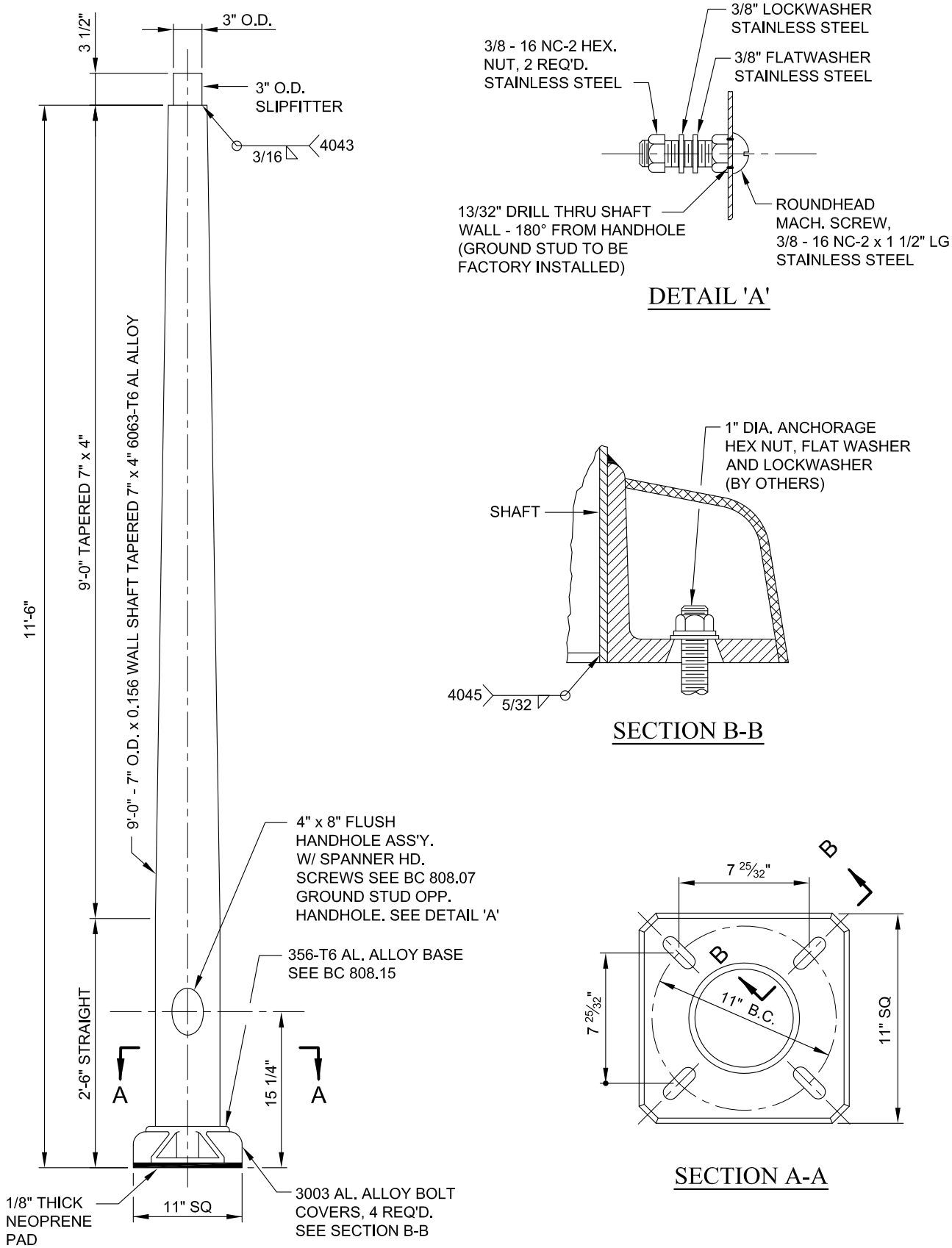

CITY OF BALTIMORE 1797	APPROVED: Bimal Devkota DIVISION CHIEF, TRANSPORTATION ENGINEERING AND CONSTRUCTION Khalil Zaid DIRECTOR, DEPARTMENT OF TRANSPORTATION	CITY OF BALTIMORE DEPARTMENT OF TRANSPORTATION TRANSPORTATION ENGINEERING AND CONSTRUCTION	ISSUED 8 / 2010	REVISED	REVISED
		11'-6" LIGHTING STANDARD FOR RESIDENTIAL STREETS	STANDARD NO. BC 808.06		
			SCALE : NONE	SHEET 1 OF 1	

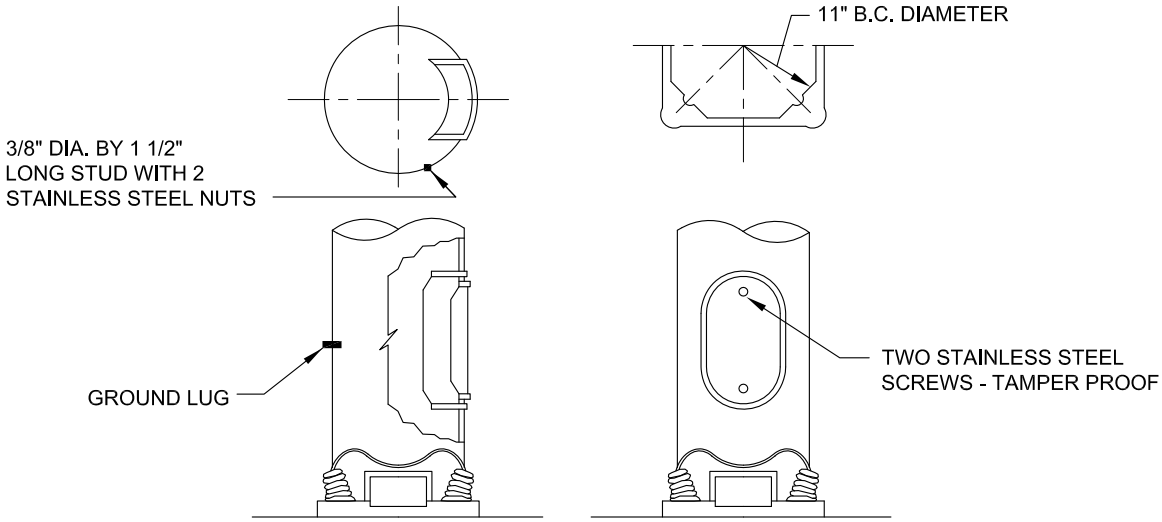

4" x 8" HANDHOLE

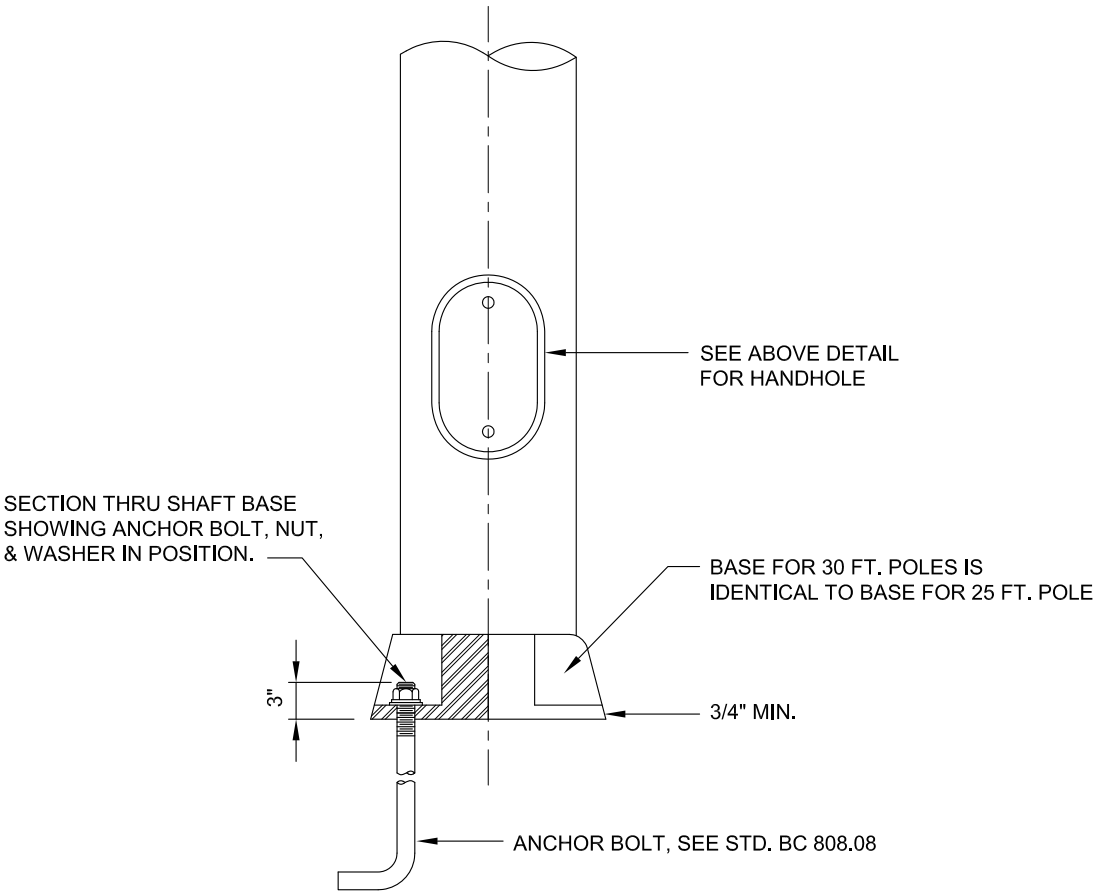

DETAILS OF ANCHOR BOLT IN PLACE

APPROVED:

DIVISION CHIEF, TRANSPORTATION ENGINEERING AND CONSTRUCTION

DIRECTOR, DEPARTMENT OF TRANSPORTATION

CITY OF BALTIMORE
DEPARTMENT OF TRANSPORTATION
TRANSPORTATION ENGINEERING AND CONSTRUCTION

LIGHTING STANDARD MISCELLANEOUS DETAILS

ISSUED	REVISED	REVISED
8 / 2010		

STANDARD NO.
BC 808.07

SCALE : NONE

SHEET 1 OF 1

BOLT DIA.	LENGTH	
1"	40"	*
1 ¼"	48"	**
1 ½"	60"	

* STANDARD LIGHT POLE

** INNER HARBOR TYPE LIGHT POLE

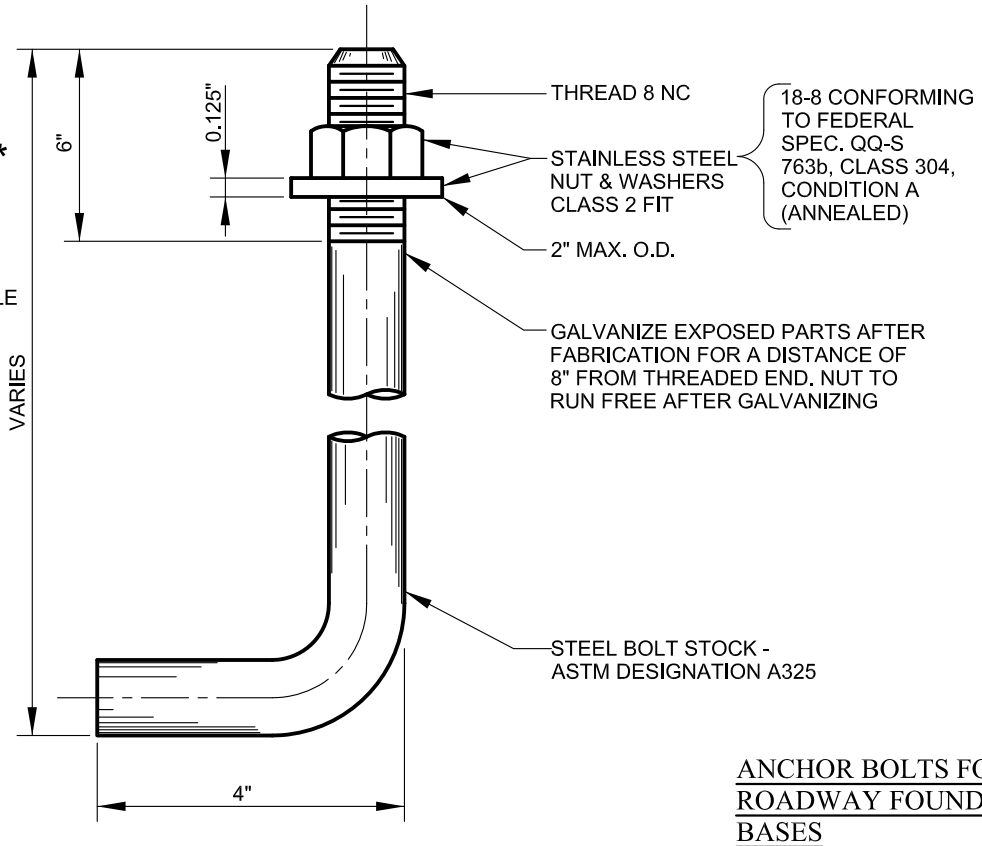

ANCHOR BOLTS FOR ROADWAY FOUNDATION BASES

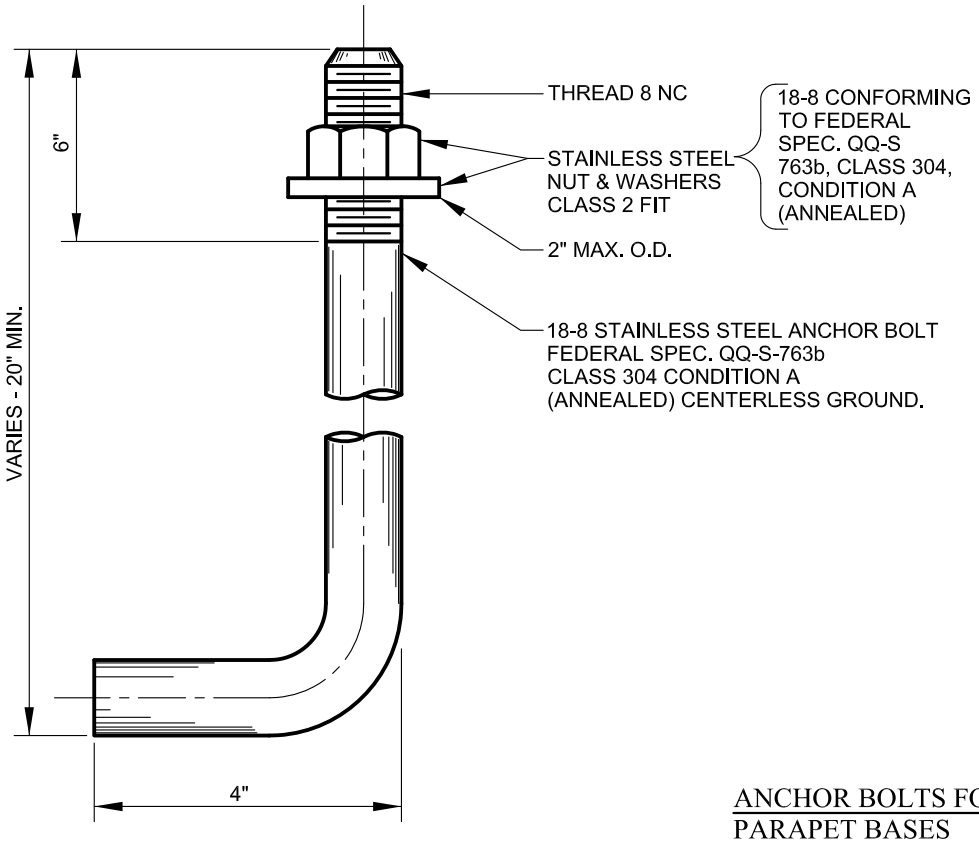

ANCHOR BOLTS FOR PARAPET BASES

APPROVED:

DIVISION CHIEF, TRANSPORTATION ENGINEERING AND CONSTRUCTION

DIRECTOR, DEPARTMENT OF TRANSPORTATION

CITY OF BALTIMORE
DEPARTMENT OF TRANSPORTATION
TRANSPORTATION ENGINEERING AND CONSTRUCTION

ISSUED	REVISED	REVISED
8 / 2010		

STANDARD ANCHOR BOLTS

STANDARD NO.
BC 808.08

SCALE : NONE

SHEET 1 OF 1

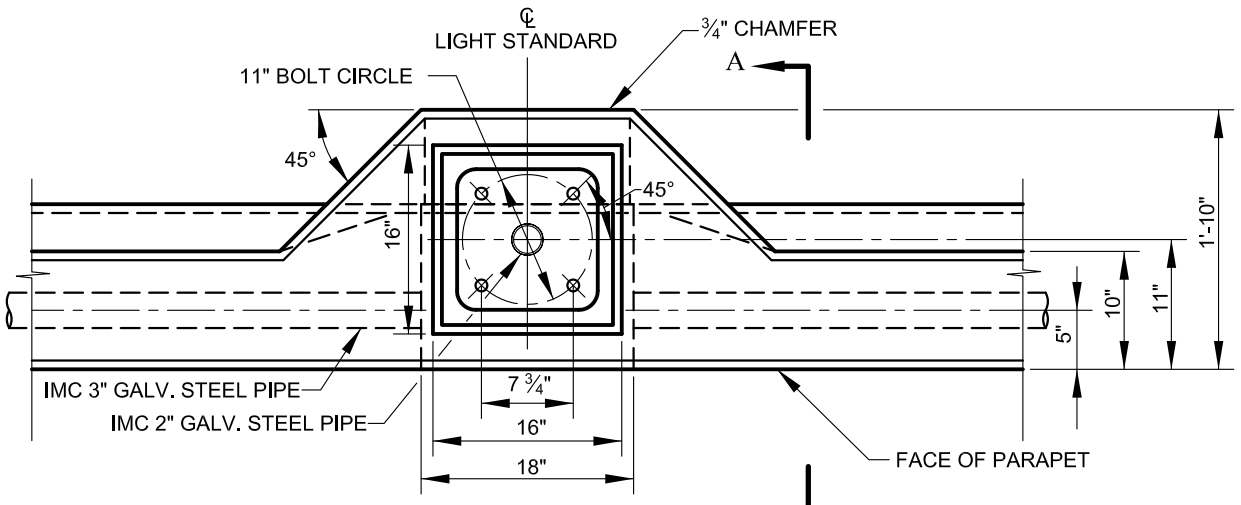

PLAN

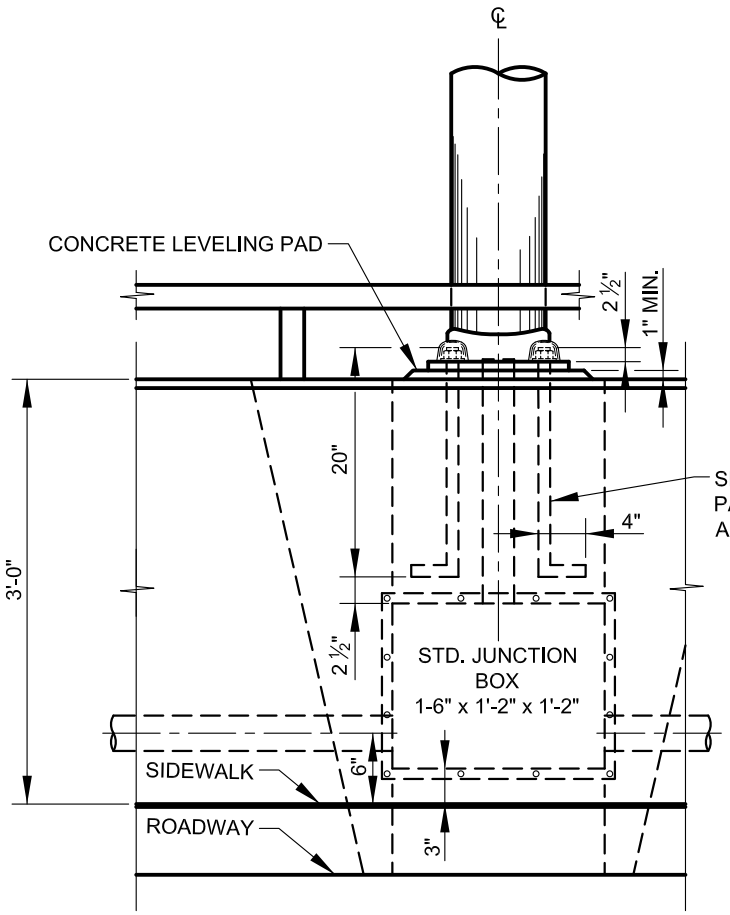

ELEVATION

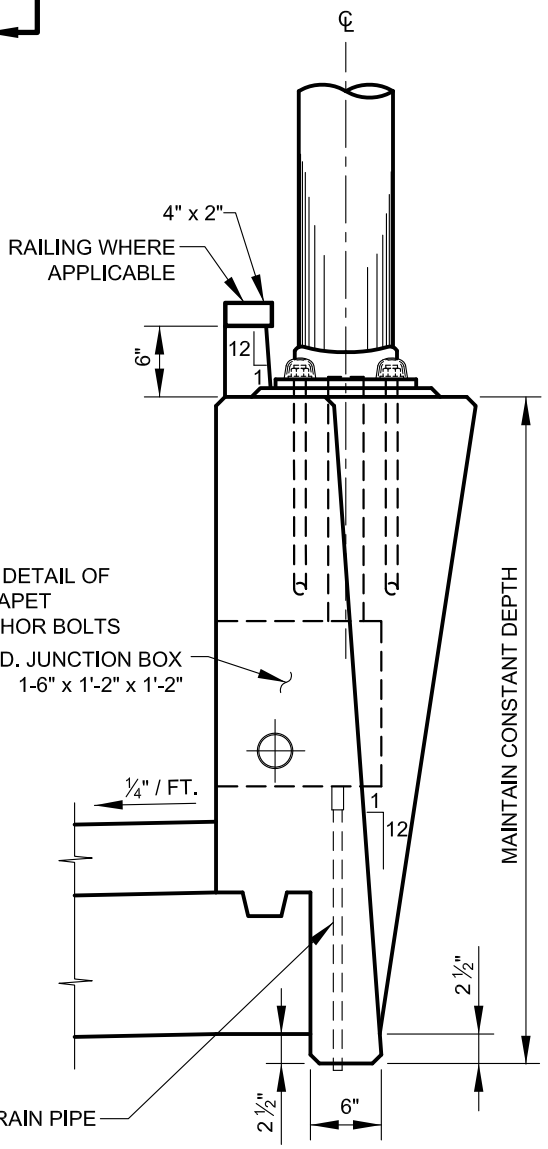

SECTION 'A-A'

CITY OF BALTIMORE
DEPARTMENT OF TRANSPORTATION
TRANSPORTATION ENGINEERING AND CONSTRUCTION

APPROVED:

DIVISION CHIEF, TRANSPORTATION ENGINEERING AND CONSTRUCTION

DIRECTOR, DEPARTMENT OF TRANSPORTATION

ISSUED	REVISED	REVISED
8 / 2010		

TYPICAL INSTALLATION OF LIGHT STANDARD ON BRIDGE PARAPET ADJACENT TO SIDEWALK

STANDARD NO.
BC 808.09

SCALE : NONE

SHEET 1 OF 1

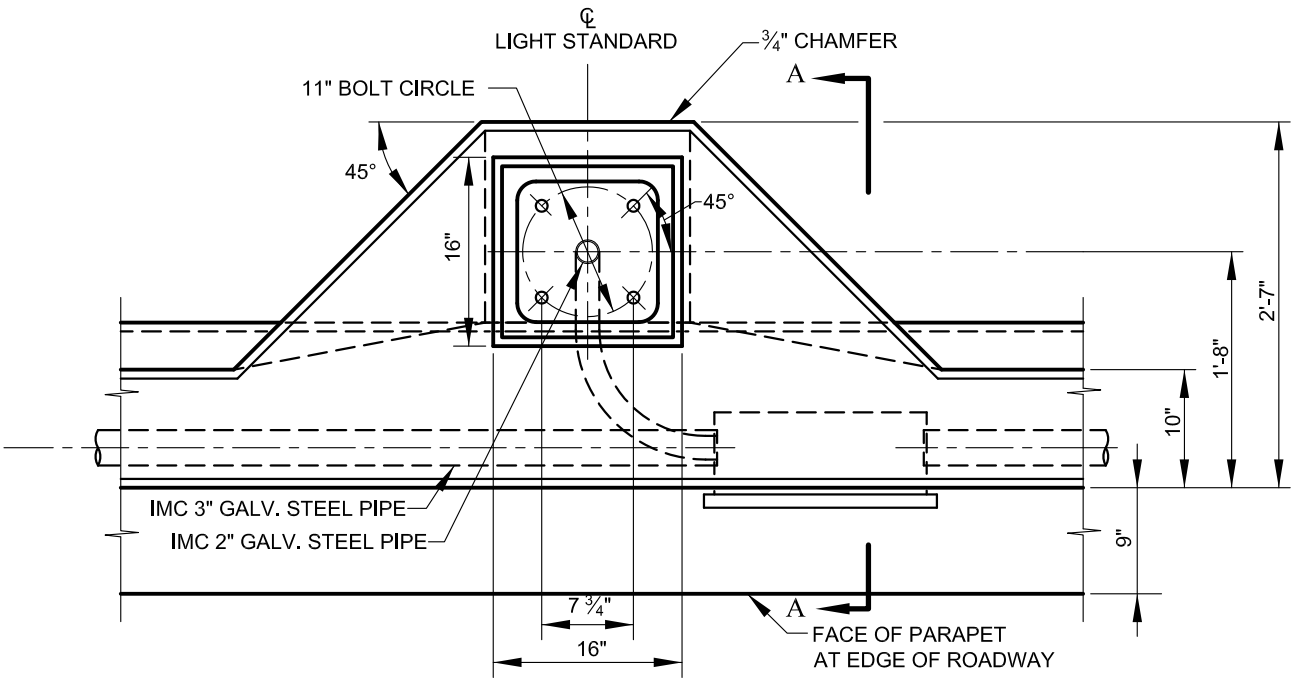

PLAN

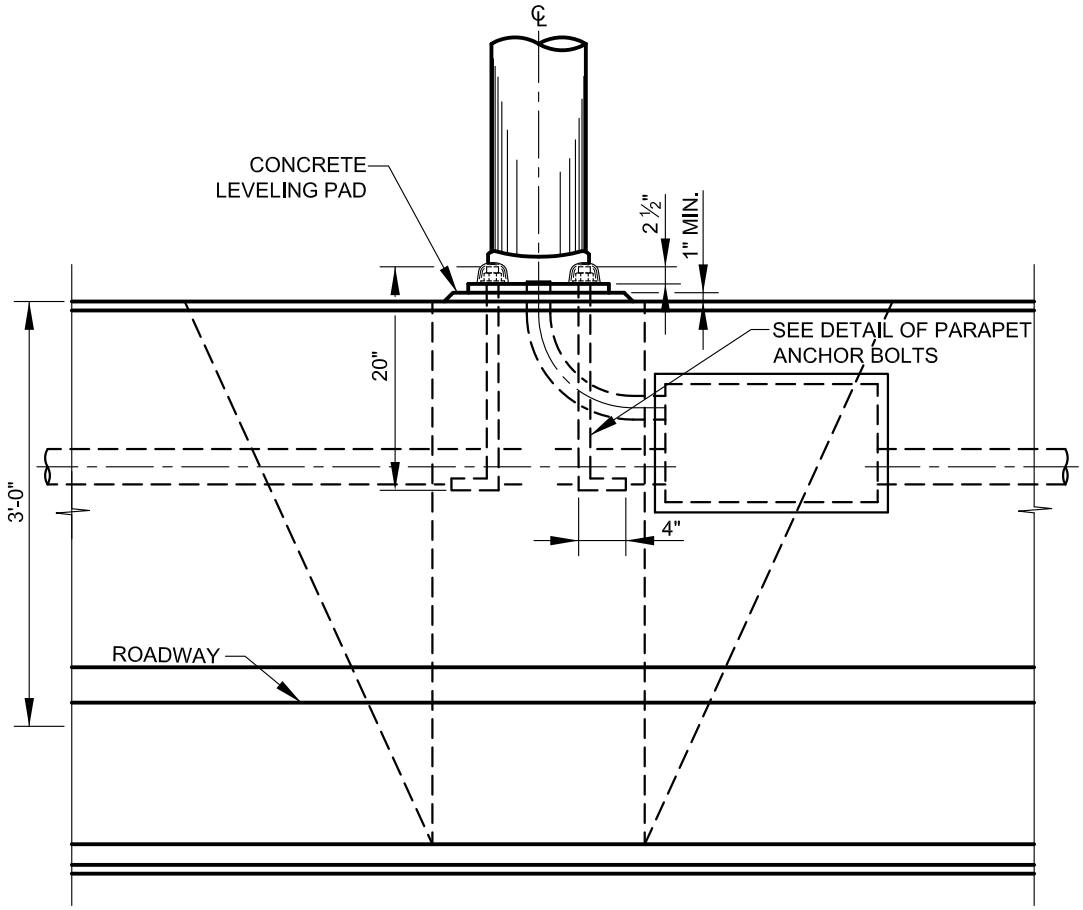

ELEVATION

APPROVED:

DIVISION CHIEF, TRANSPORTATION ENGINEERING AND CONSTRUCTION

DIRECTOR, DEPARTMENT OF TRANSPORTATION

CITY OF BALTIMORE
DEPARTMENT OF TRANSPORTATION
TRANSPORTATION ENGINEERING AND CONSTRUCTION

TYPICAL INSTALLATION OF LIGHT STANDARD ON BRIDGE PARAPET ADJACENT TO ROADWAY

ISSUED	REVISED	REVISED
8 / 2010		

STANDARD NO.
BC 808.10-1

SCALE : NONE

SHEET 1 OF 2

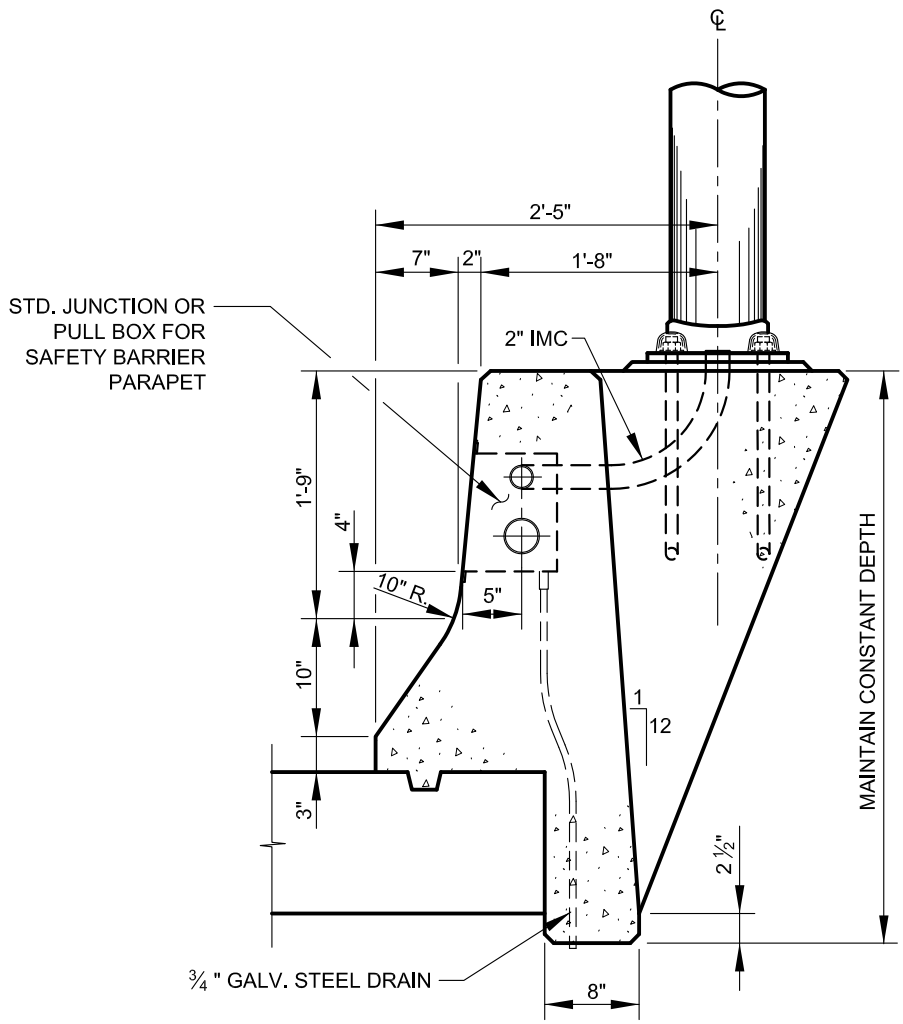

SECTION 'A-A'

APPROVED:

DIVISION CHIEF, TRANSPORTATION ENGINEERING AND CONSTRUCTION

DIRECTOR, DEPARTMENT OF TRANSPORTATION

CITY OF BALTIMORE
DEPARTMENT OF TRANSPORTATION
TRANSPORTATION ENGINEERING AND CONSTRUCTION

TYPICAL INSTALLATION OF LIGHT STANDARD ON BRIDGE PARAPET ADJACENT TO ROADWAY

ISSUED	REVISED	REVISED
8 / 2010		

STANDARD NO.
BC 808.10-2

SCALE : NONE

SHEET 2 OF 2

PLUMIZER FURNISHED WITH NO. 25
STEEL POLE IF REQUIRED

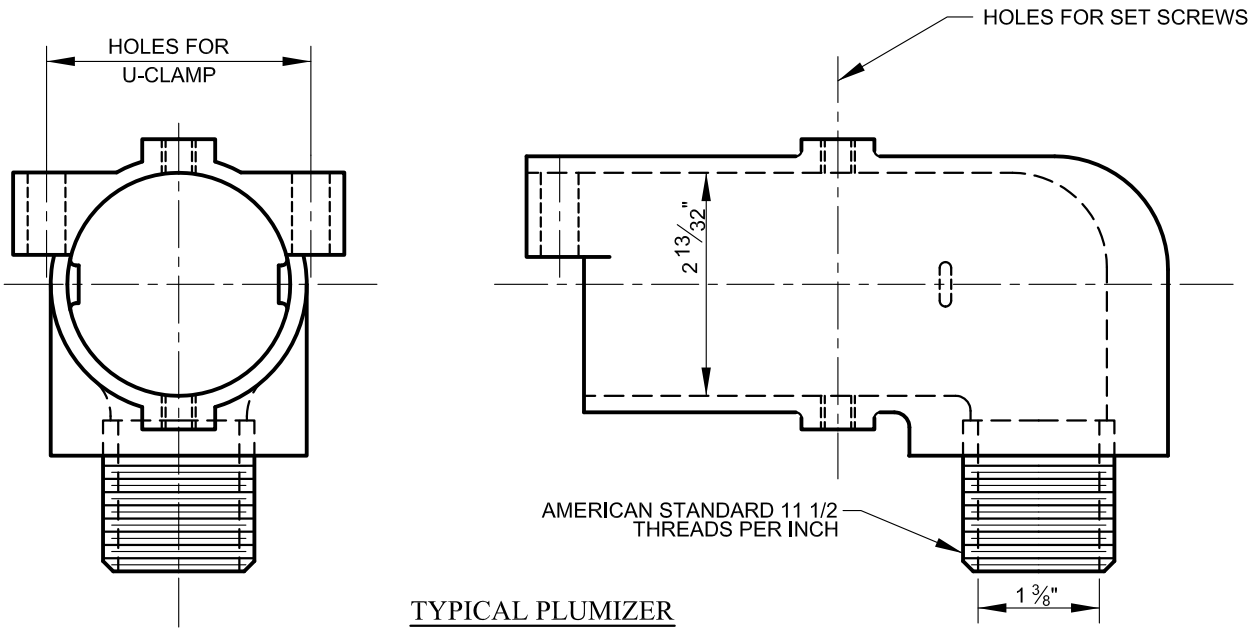

TYPICAL PLUMIZER

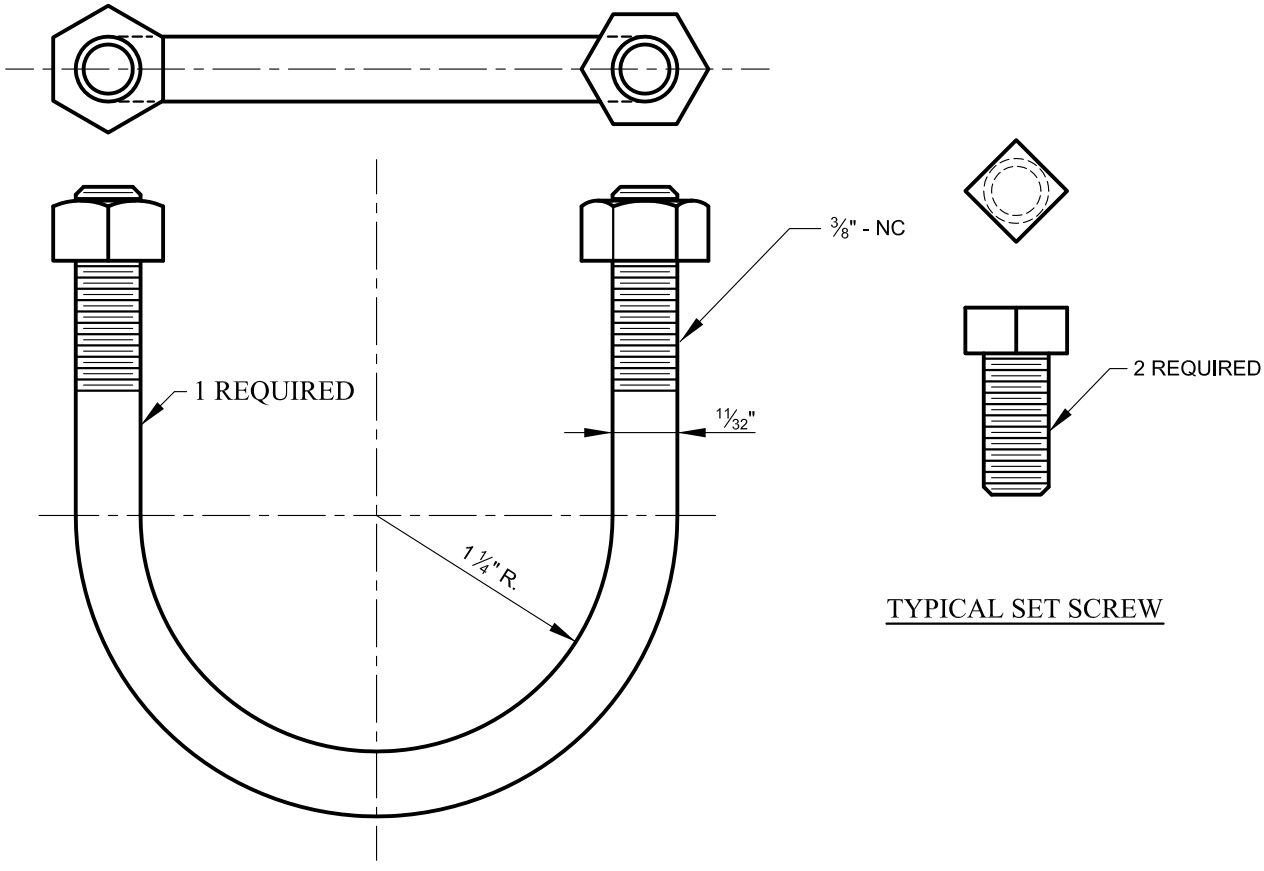

TYPICAL SET SCREW

TYPICAL U-CLAMP

SEE SPECIFICATIONS AND SPECIAL PROVISIONS
FOR MATERIALS AND FINISH

APPROVED:

DIVISION CHIEF, TRANSPORTATION ENGINEERING AND CONSTRUCTION

DIRECTOR, DEPARTMENT OF TRANSPORTATION

CITY OF BALTIMORE
DEPARTMENT OF TRANSPORTATION
TRANSPORTATION ENGINEERING AND CONSTRUCTION

ISSUED	REVISED	REVISED
8 / 2010		

LIGHTING ACCESSORIES PLUMIZER ATTACHMENT AND PARTS

STANDARD NO.
BC 808.11

SCALE : NONE

SHEET 1 OF 1

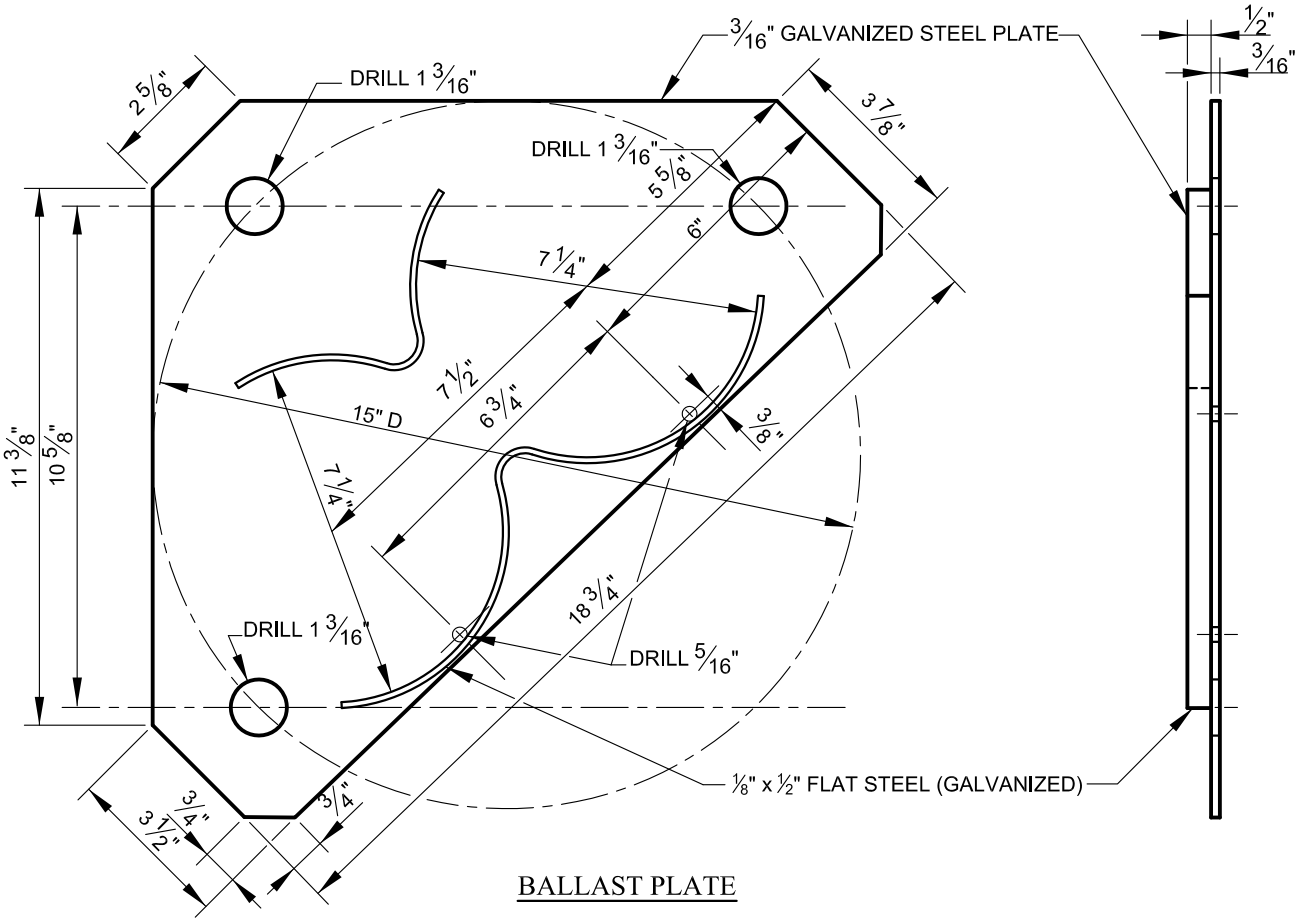

BALLAST PLATE

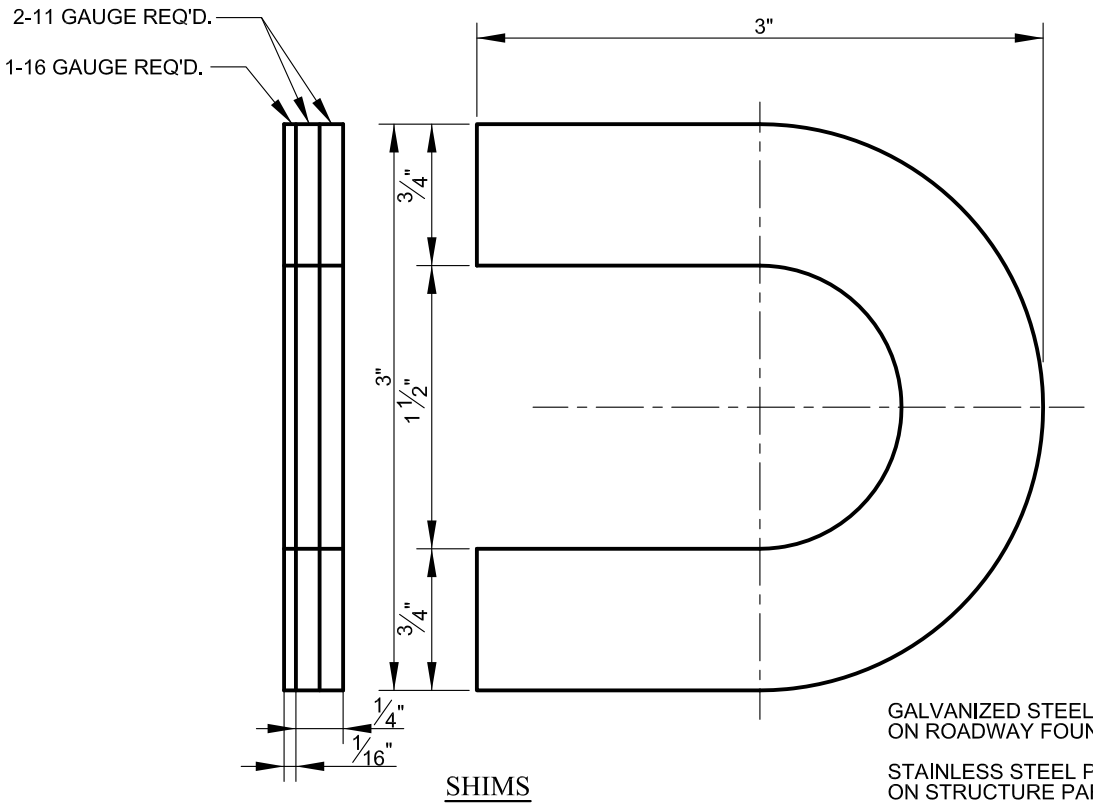

SHIMS

GALVANIZED STEEL PLATE
ON ROADWAY FOUNDATIONS.

STAINLESS STEEL PLATE
ON STRUCTURE PARAPETS.

APPROVED:

DIVISION CHIEF, TRANSPORTATION ENGINEERING AND CONSTRUCTION

DIRECTOR, DEPARTMENT OF TRANSPORTATION

CITY OF BALTIMORE
DEPARTMENT OF TRANSPORTATION
TRANSPORTATION ENGINEERING AND CONSTRUCTION

ISSUED	REVISED	REVISED
8 / 2010		

LIGHTING ACCESSORIES
BALLAST PLATE AND SHIMS

STANDARD NO.
BC 808.12

SCALE : NONE

SHEET 1 OF 1

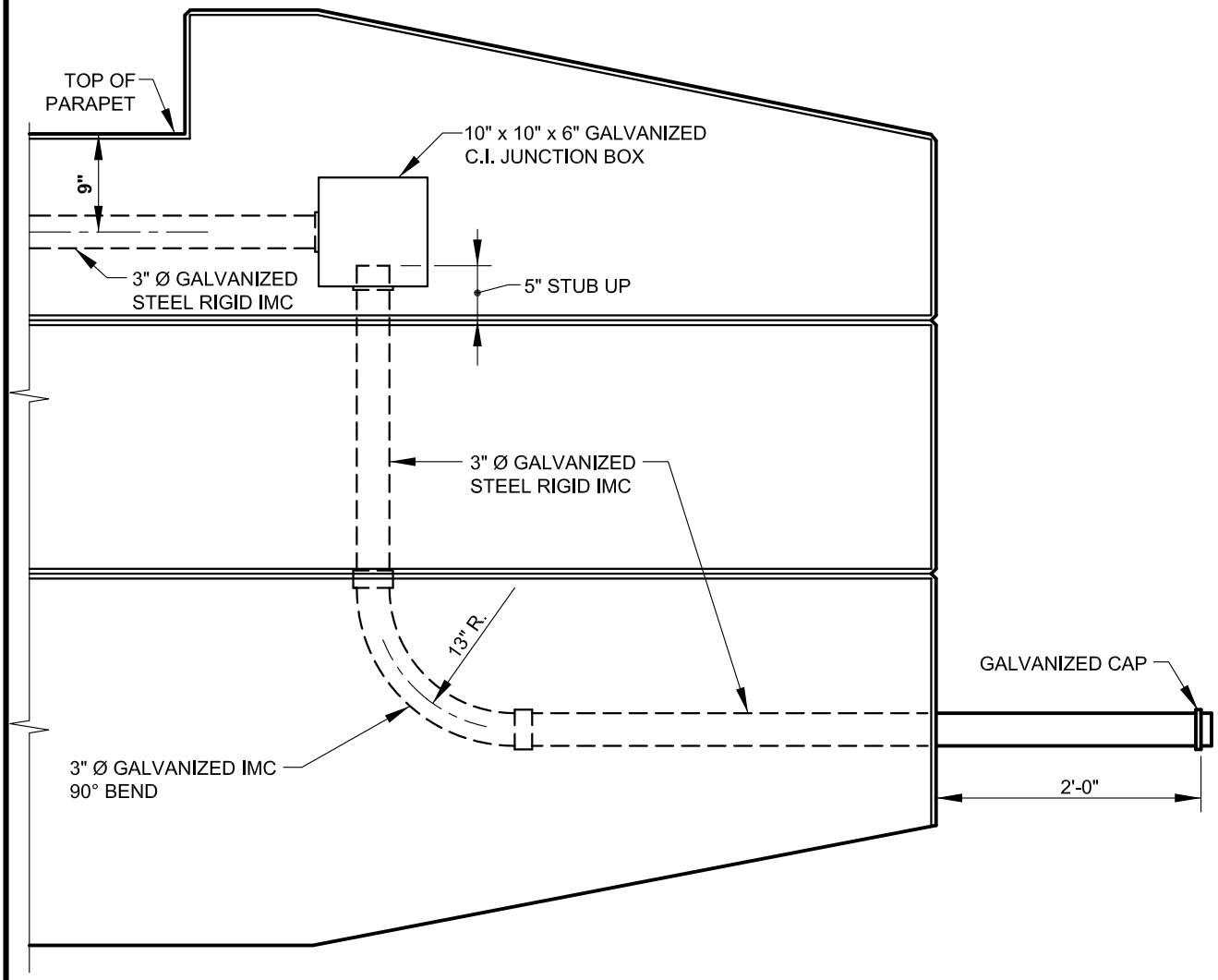

END OF BRIDGE PARAPET DETAILS

APPROVED:

DIVISION CHIEF, TRANSPORTATION ENGINEERING AND CONSTRUCTION

DIRECTOR, DEPARTMENT OF TRANSPORTATION

CITY OF BALTIMORE
DEPARTMENT OF TRANSPORTATION
TRANSPORTATION ENGINEERING AND CONSTRUCTION

BRIDGE LIGHTING CONDUIT DETAILS

ISSUED	REVISED	REVISED
8 / 2010		

STANDARD NO.
BC 808.13

SCALE : NONE

SHEET 1 OF 1

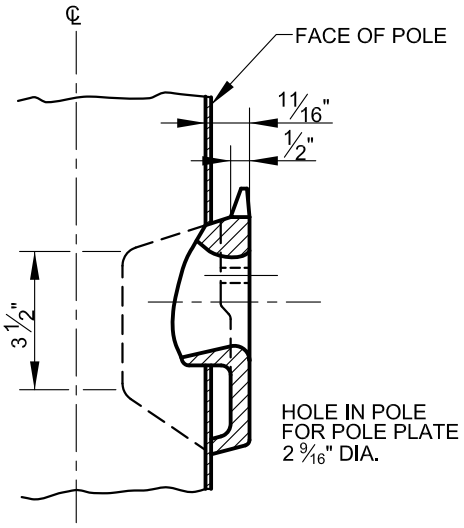

SECTION THRU POLE PLATE

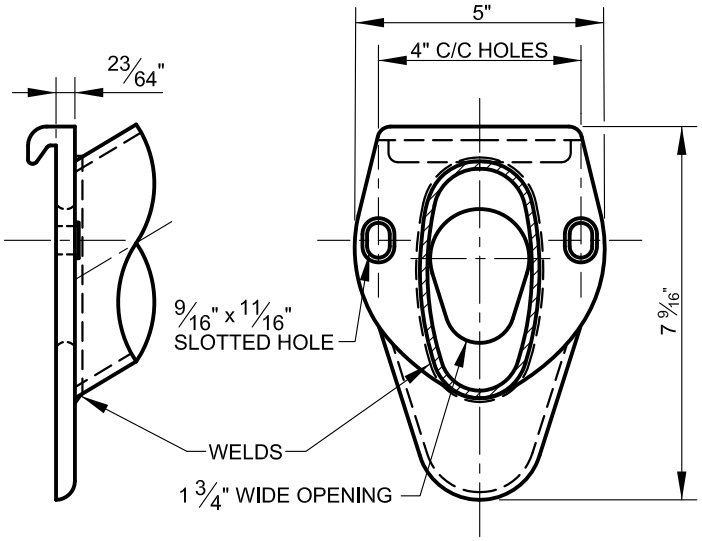

TAPERED ARM CONNECTION

NOTE: TO BE USED ON POLES SHOWN ON BC 808.01 THRU BC 808.05 AND BC 808.13

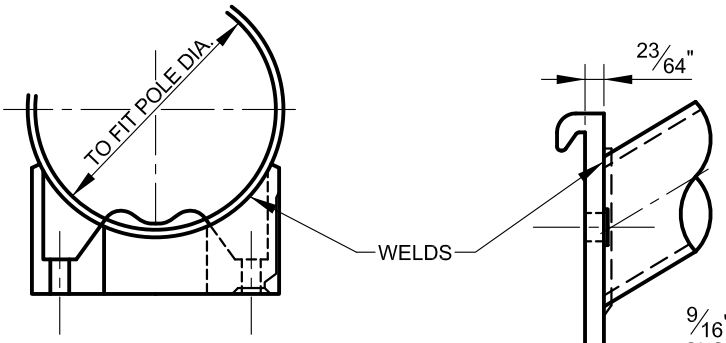

TOP VIEW OF POLE PLATE

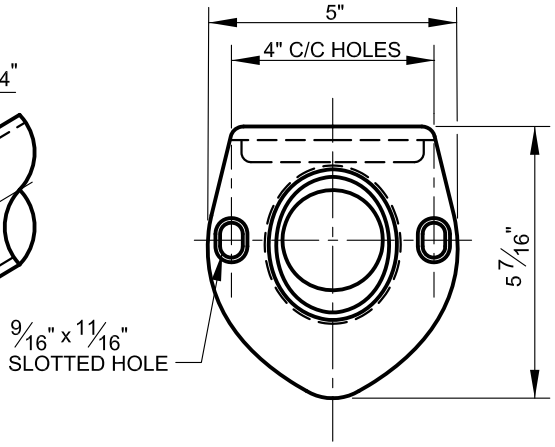

PIPE ARM CONNECTION

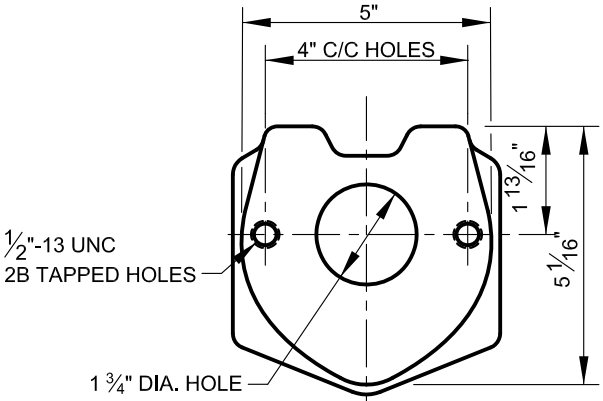

FRONT VIEW OF POLE PLATE

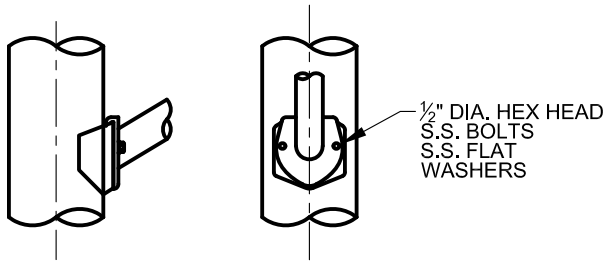

ASSEMBLED VIEW

APPROVED:

DIVISION CHIEF, TRANSPORTATION ENGINEERING AND CONSTRUCTION

DIRECTOR, DEPARTMENT OF TRANSPORTATION

CITY OF BALTIMORE
DEPARTMENT OF TRANSPORTATION
TRANSPORTATION ENGINEERING AND CONSTRUCTION

DETAIL OF ALUMINUM POLE AND ARM PLATE CONSTRUCTION

ISSUED	REVISED	REVISED
8 / 2010		

STANDARD NO.
BC 808.14

SCALE : NONE

SHEET 1 OF 1

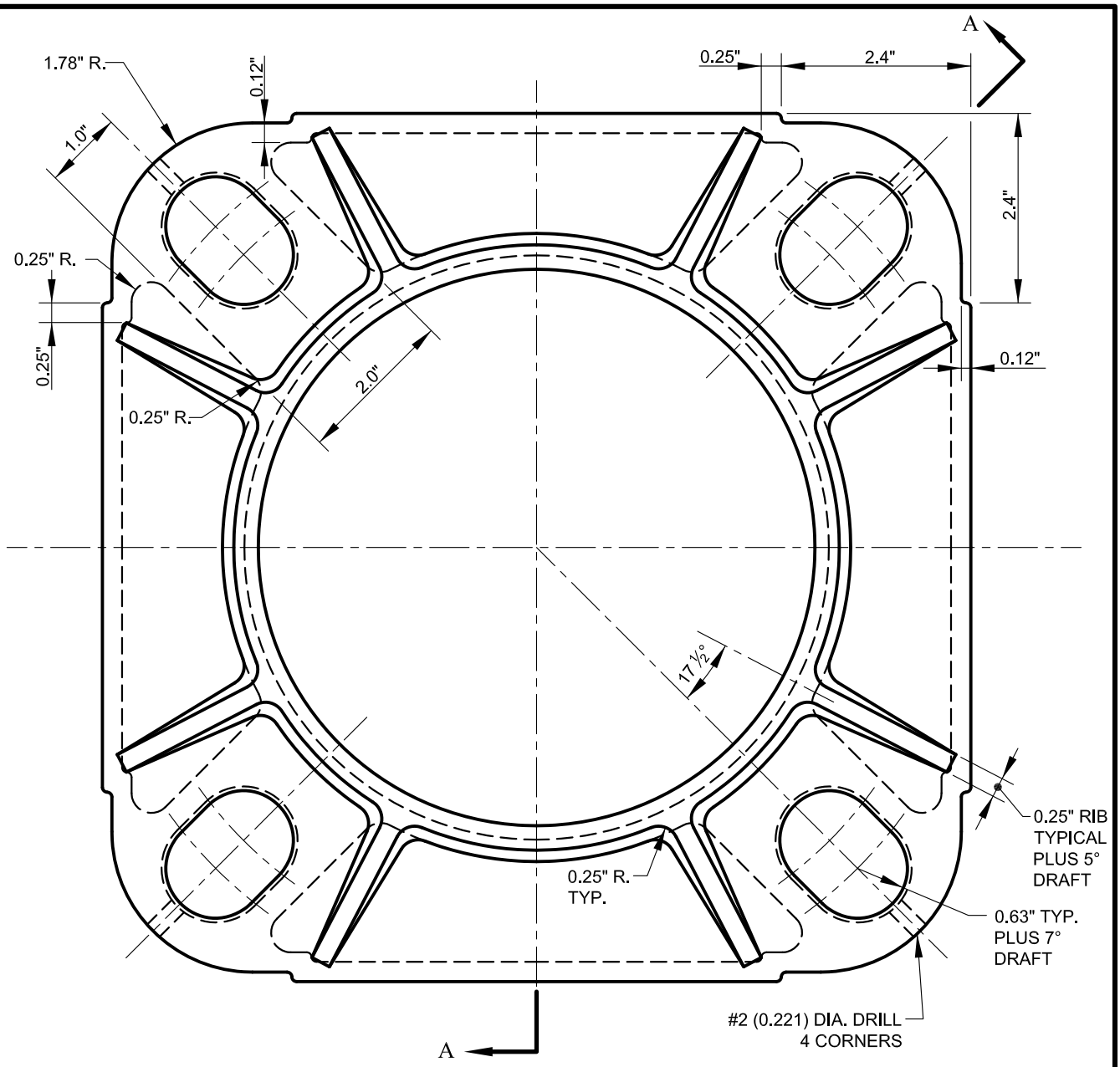

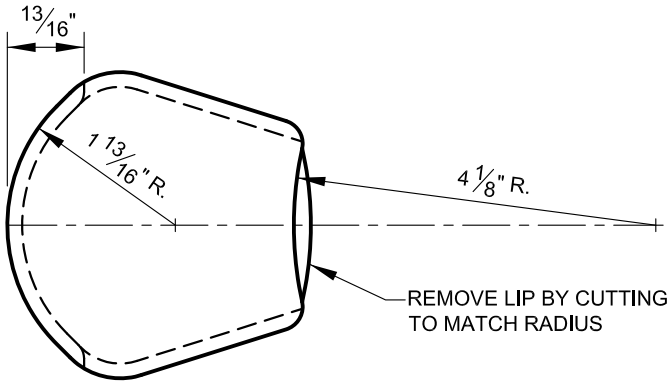

BOLT COVER DETAIL

APPROVED:

DIVISION CHIEF, TRANSPORTATION ENGINEERING AND CONSTRUCTION

DIRECTOR, DEPARTMENT OF TRANSPORTATION

CITY OF BALTIMORE
DEPARTMENT OF TRANSPORTATION
TRANSPORTATION ENGINEERING AND CONSTRUCTION

ISSUED	REVISED	REVISED
8 / 2010		

BASE PLATE FOR 11'-6", 25' & 30' POLES, DETAIL OF BOLT COVER

STANDARD NO.
BC 808.15-1

SCALE : NONE

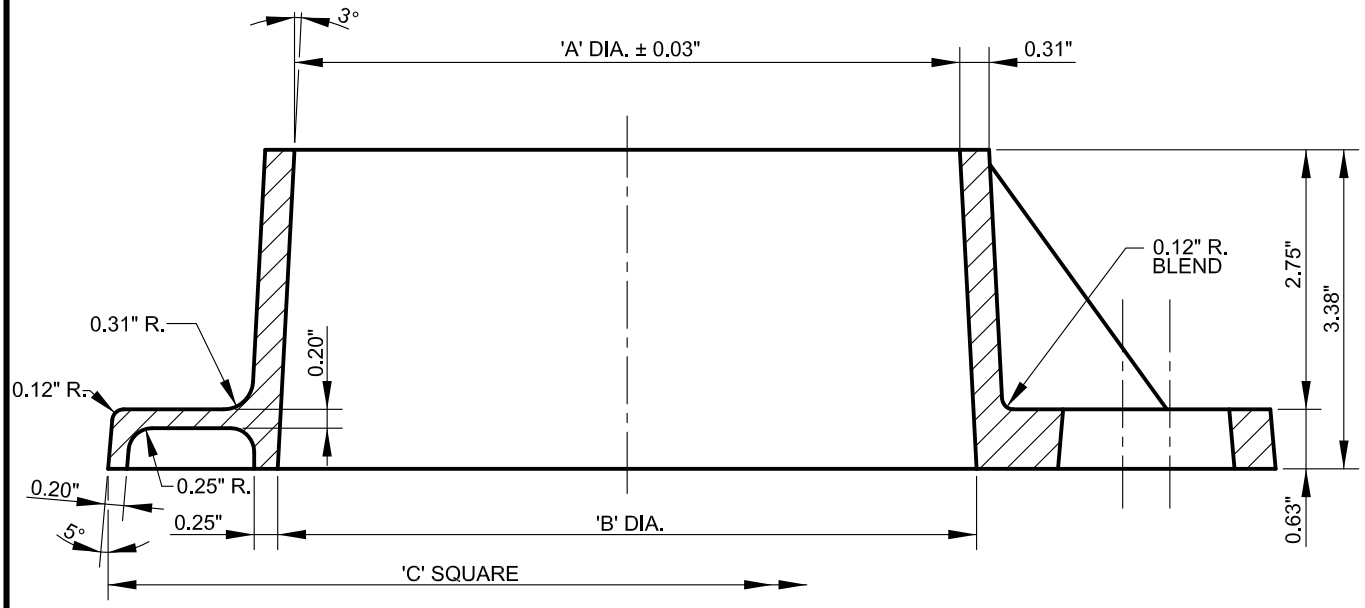

SECTION 'A-A'

	'A' DIMENSION	'B' DIMENSION	'C' DIMENSION
11'-6" POLE	7.05"	7.404"	11" SQUARE
25' POLE	8.05"	8.404"	12" SQUARE
30' POLE	8.05"	8.404"	12" SQUARE

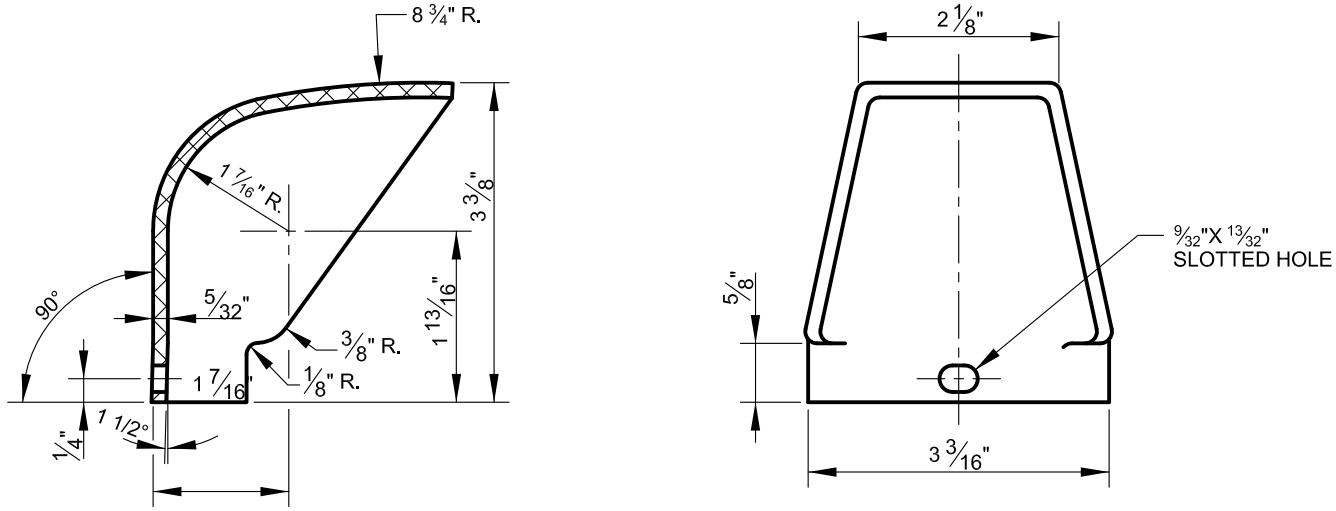

BOLT COVER DETAILS

CITY OF BALTIMORE 1797

APPROVED:

DIVISION CHIEF, TRANSPORTATION ENGINEERING AND CONSTRUCTION

DIRECTOR, DEPARTMENT OF TRANSPORTATION

CITY OF BALTIMORE
DEPARTMENT OF TRANSPORTATION
TRANSPORTATION ENGINEERING AND CONSTRUCTION

BASE PLATE FOR 11'-6", 25' & 30' POLES, DETAIL OF BOLT COVER

ISSUED	REVISED	REVISED
8 / 2010		

STANDARD NO.
BC 808.15-2

SCALE : NONE

SHEET 2 OF 2

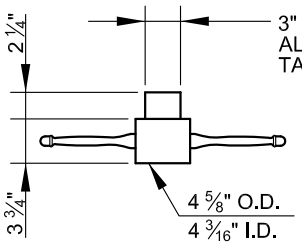

3" O.D. POST TOP TENON WITH LADDER REST 20 3/4" LONG. CAST ALUMINUM WITH PAINTED GOLD LEAFING. BLACK POWDER COAT. TAMPER PROOF SCREWS PROVIDED (3).

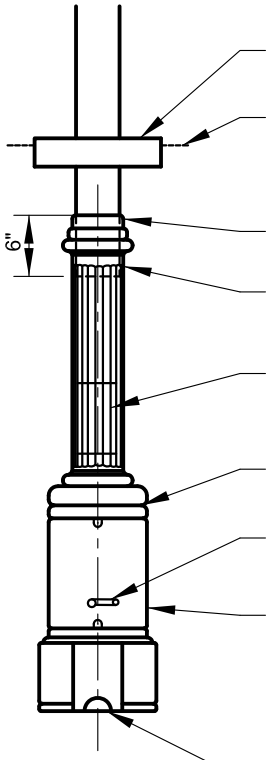

11 ½" SQ. CAST ALUMINUM SLIP OVER BASE

2 EA. TAMPER PROOF SCREWS
2 NOTCHES SUPPLIED AS SHOWN

CONTINUOUS FILLET WELD OF POST TO BASE

CAST ALUMINUM ROUND FLUTED BASE WITH 16 FLUTES

REMOVEABLE CAST ALUMINUM DOOR WITH 2 EA. TAMPER PROOF SCREWS. DOOR IS 3 ¾" WIDE x 6" LG

CONTINUOUS FILLET WELD OF TOP BASE TO BOTTOM BASE.

GROUND LUG PROVIDED INSIDE BASE

CAST ALUMINUM OCTAGONAL BASE WITH REMOVEABLE DOOR, 2 EA. TAMPER PROOF SCREWS HOLD DOOR SECURE. DOOR REMOVED TO SHOW INSIDE.

CAST SLOT CONCEALED BY BASE COVER.

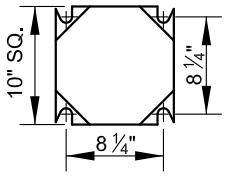

FOR BASE DETAIL SEE BC 801.07

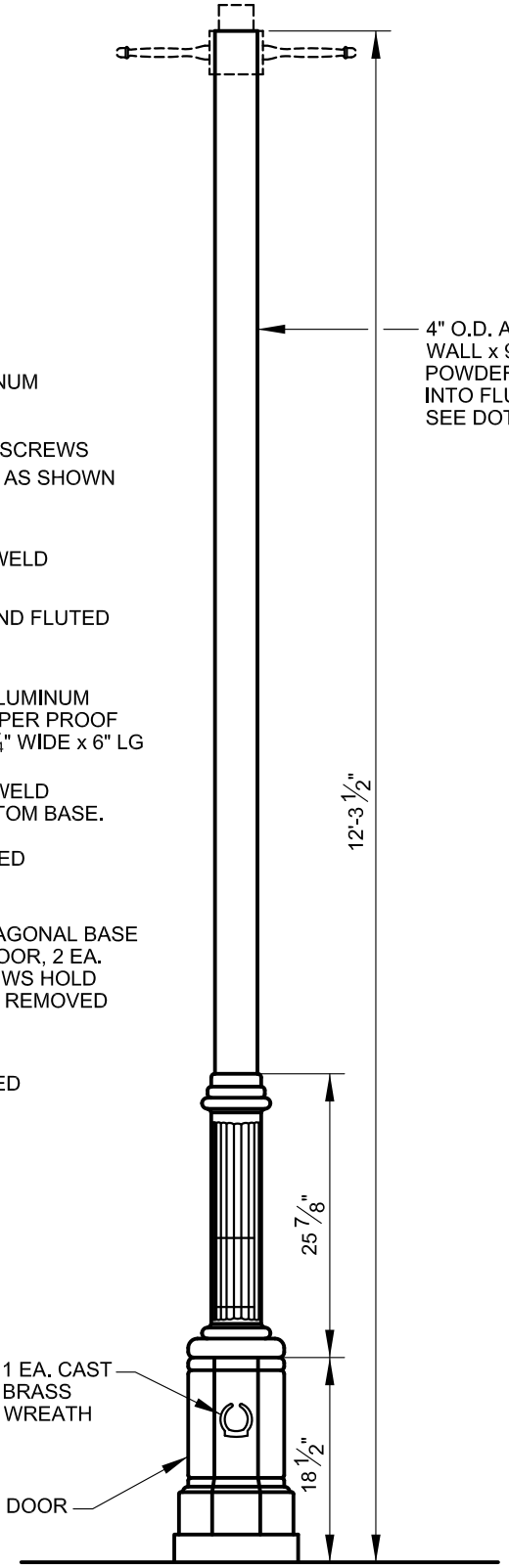

4" O.D. ALUMINUM POST x .125" WALL x 9' LONG WITH BLACK POWDER COAT. POST SLIPS INTO FLUTED BASE 6" DEEP. SEE DOTTED LINE AT LEFT.

1 EA. CAST BRASS WREATH

DOOR

APPROVED:

DIVISION CHIEF, TRANSPORTATION ENGINEERING AND CONSTRUCTION

DIRECTOR, DEPARTMENT OF TRANSPORTATION

CITY OF BALTIMORE
DEPARTMENT OF TRANSPORTATION
TRANSPORTATION ENGINEERING AND CONSTRUCTION

DECORATIVE POLE AND TENON

ISSUED	REVISED	REVISED
8 / 2010		

STANDARD NO.
BC 808.16

SCALE : NONE

SHEET 1 OF 1

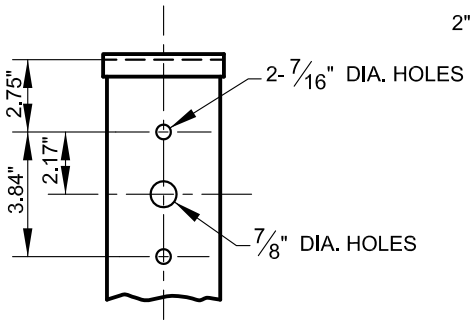

POLE TOP DETAIL

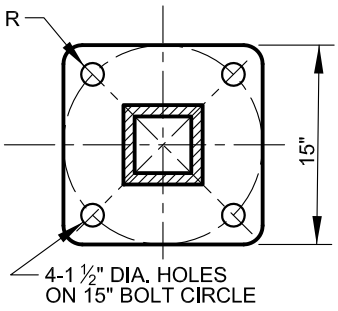

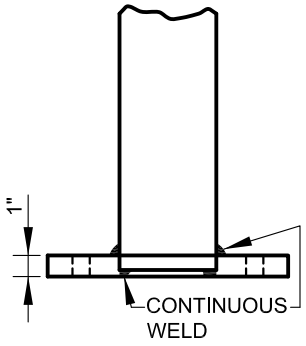

BASE PLATE DETAIL

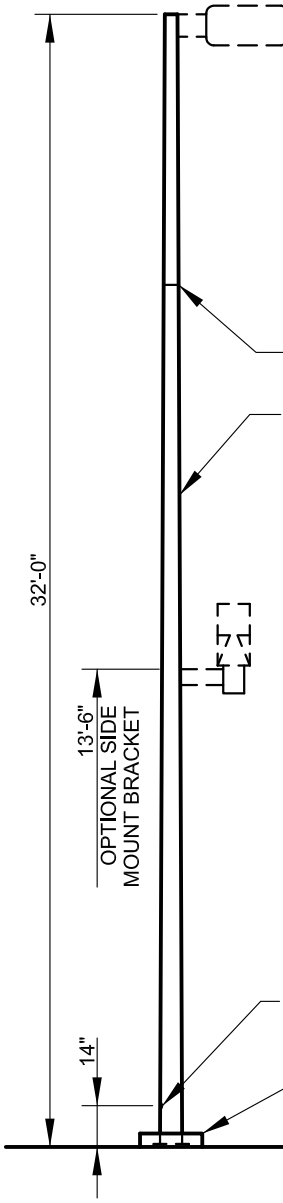

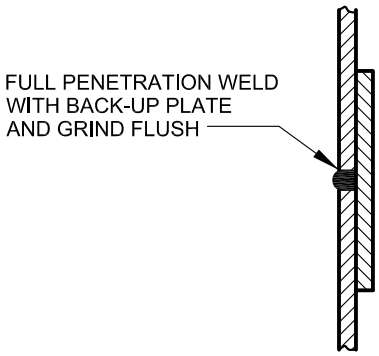

SHOP SPLICE DETAIL

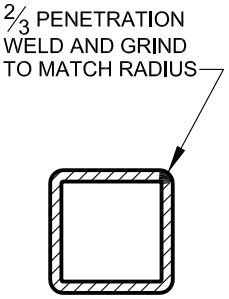

LONGITUDINAL WELD

NOTE:
THE POLE SHALL BE FINISHED WITH AN ELECTROSTATICALLY DEPOSITED DRY POLYESTER POWDER COATING IN DURANODIC 312 BRONZE

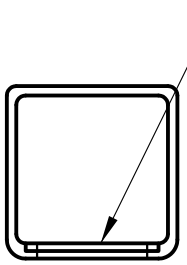

SECTION 'A-A'

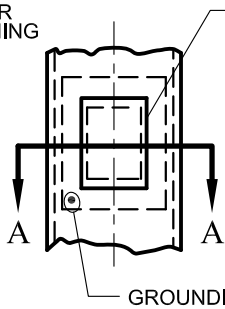

FLUSH HANDHOLE DETAIL

APPROVED:

DIVISION CHIEF, TRANSPORTATION ENGINEERING AND CONSTRUCTION

DIRECTOR, DEPARTMENT OF TRANSPORTATION

CITY OF BALTIMORE
DEPARTMENT OF TRANSPORTATION
TRANSPORTATION ENGINEERING AND CONSTRUCTION

32' SQUARE TAPERED POLE

ISSUED	REVISED	REVISED
8 / 2010		

STANDARD NO.
BC 808.17-1

SCALE : NONE

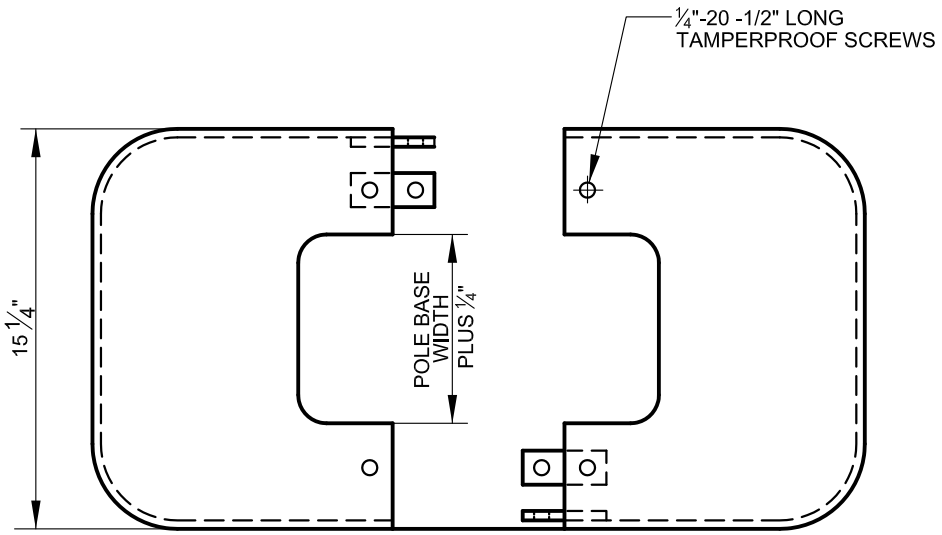

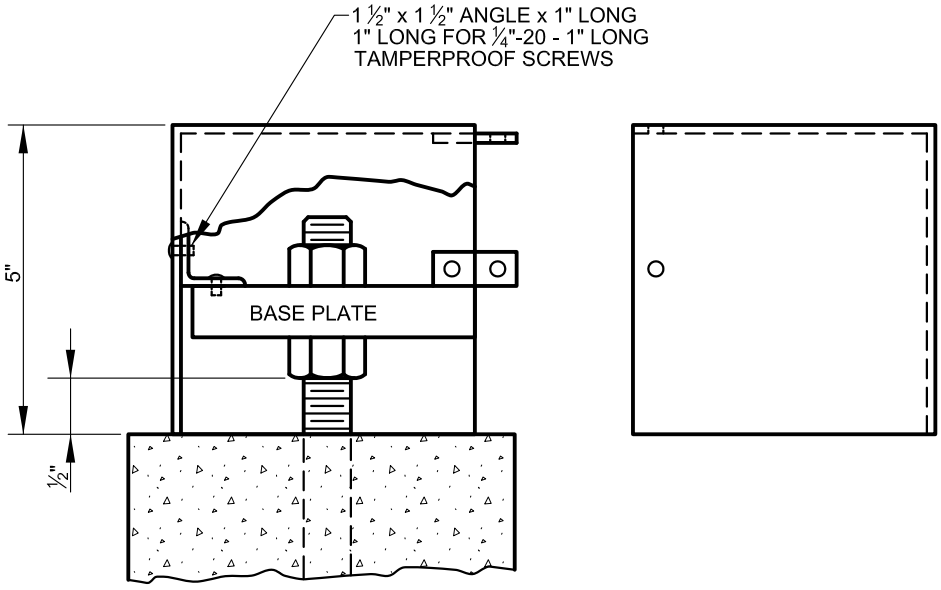

NOTES: BASE COVERS SHALL BE FABRICATED FROM HEAVY GAUGE STEEL.

BASE COVERS SHALL BE FINISHED WITH AN ELECTROSTATICALLY DEPOSITED DRY POLYESTER POWDER COATING IN DURANODIC 312 BRONZE.

CITY OF BALTIMORE 1797	APPROVED: Bimal Devkota DIVISION CHIEF, TRANSPORTATION ENGINEERING AND CONSTRUCTION Khalil Zaid DIRECTOR, DEPARTMENT OF TRANSPORTATION	CITY OF BALTIMORE DEPARTMENT OF TRANSPORTATION TRANSPORTATION ENGINEERING AND CONSTRUCTION	ISSUED 8 / 2010	REVISED	REVISED
		32' SQUARE TAPERED POLE, BASE COVER	STANDARD NO. BC 808.17-2		
			SCALE : NONE	SHEET 2 OF 2	

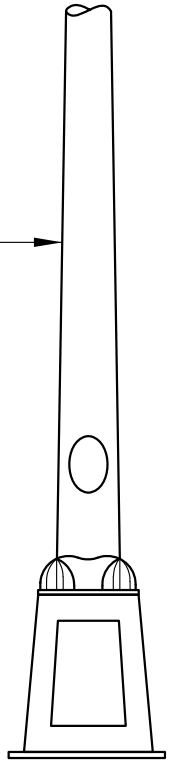

FOR POLE DETAILS
SEE BC 808.02-2

FOR ANCHOR BOLT DETAILS,
SEE BC 808.08

FOR POLE ATTACHMENT BOLT DETAILS
SEE BELOW

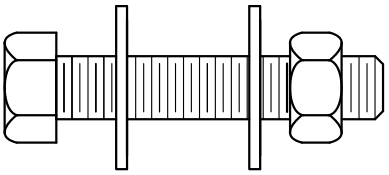

STAINLESS STEEL BOLT AND NUT
NC-8 THREAD 1" x 3" WITH TWO
STAINLESS STEEL WASHERS 1 1/16"

SEE SPECIFICATIONS AND SPECIAL
PROVISIONS FOR MATERIALS & FINISH

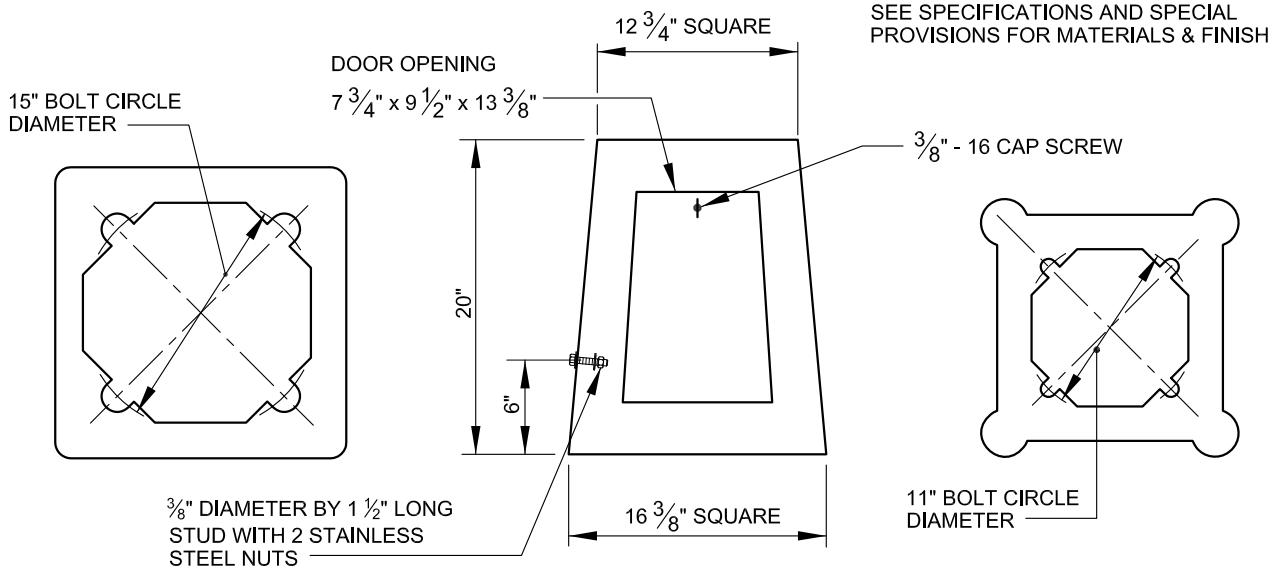

PLAN BOTTOM ELEVATION PLAN TOP

PERMANENT MOLD ALUMINUM TRANSFORMER BASES

APPROVED:

DIVISION CHIEF, TRANSPORTATION ENGINEERING AND CONSTRUCTION

DIRECTOR, DEPARTMENT OF TRANSPORTATION

CITY OF BALTIMORE
DEPARTMENT OF TRANSPORTATION
TRANSPORTATION ENGINEERING AND CONSTRUCTION

ISSUED	REVISED	REVISED
8 / 2010		

TYPICAL TRANSFORMER BASES

STANDARD NO.
BC 818.13

SCALE : NONE

SHEET 1 OF 1

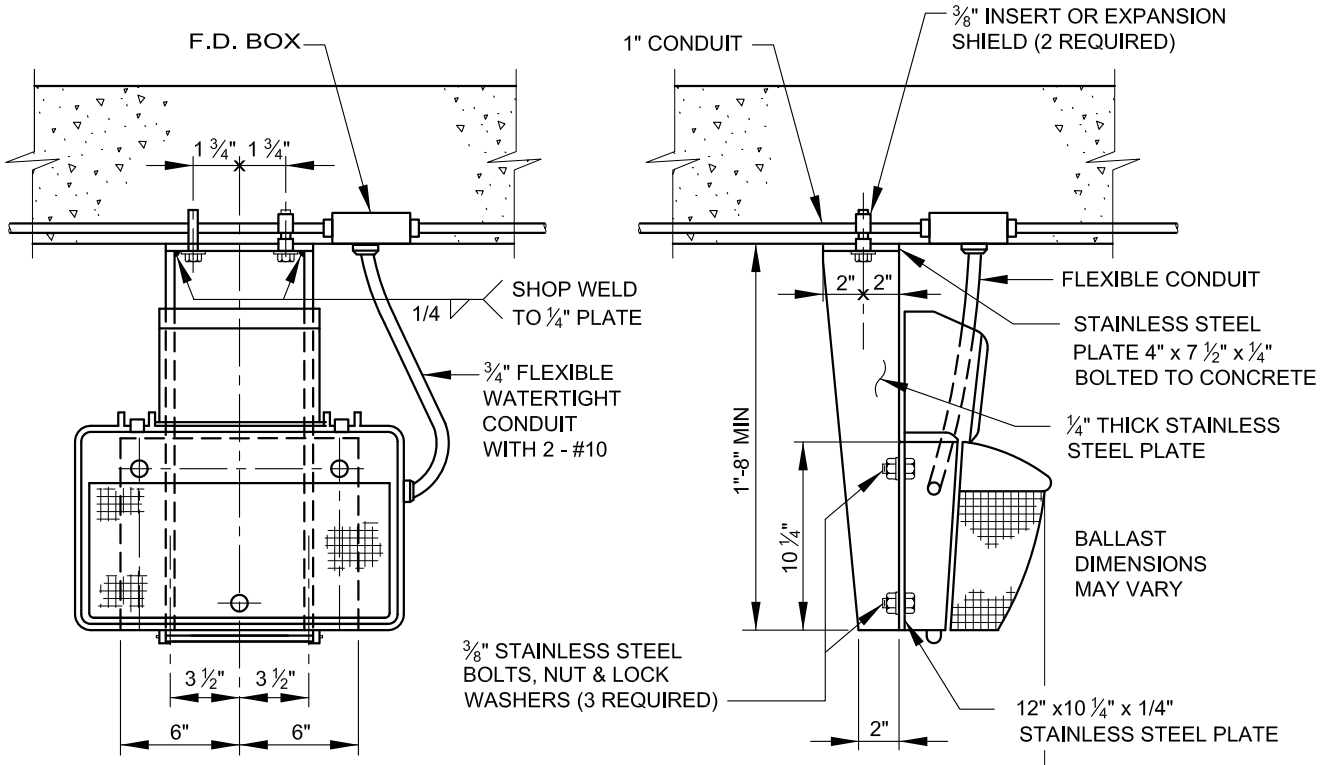

FRONT ELEVATION

SIDE ELEVATION

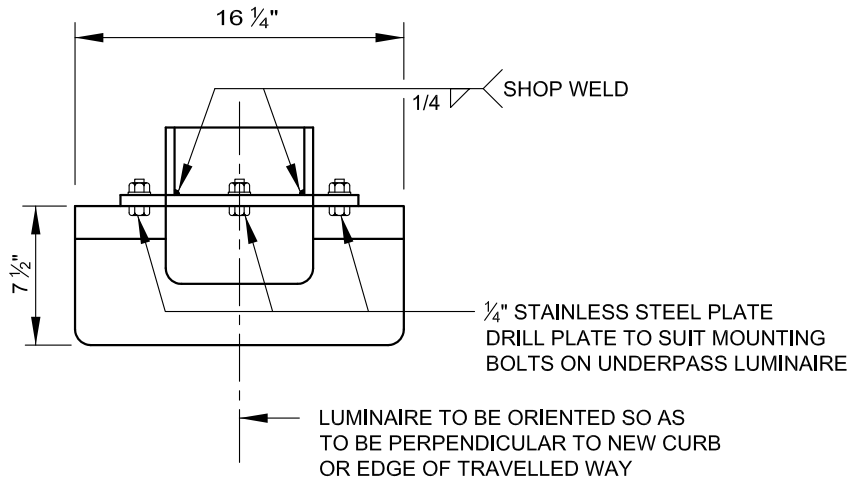

PLAN

APPROVED:

DIVISION CHIEF, TRANSPORTATION ENGINEERING AND CONSTRUCTION

DIRECTOR, DEPARTMENT OF TRANSPORTATION

CITY OF BALTIMORE
DEPARTMENT OF TRANSPORTATION
TRANSPORTATION ENGINEERING AND CONSTRUCTION

UNDERPASS LUMINAIRE TYPE I LUMINAIRE MOUNTING CONCRETE STRUCTURE

ISSUED	REVISED	REVISED
8 / 2010		

STANDARD NO.
BC 823.01

SCALE : NONE

SHEET 1 OF 1

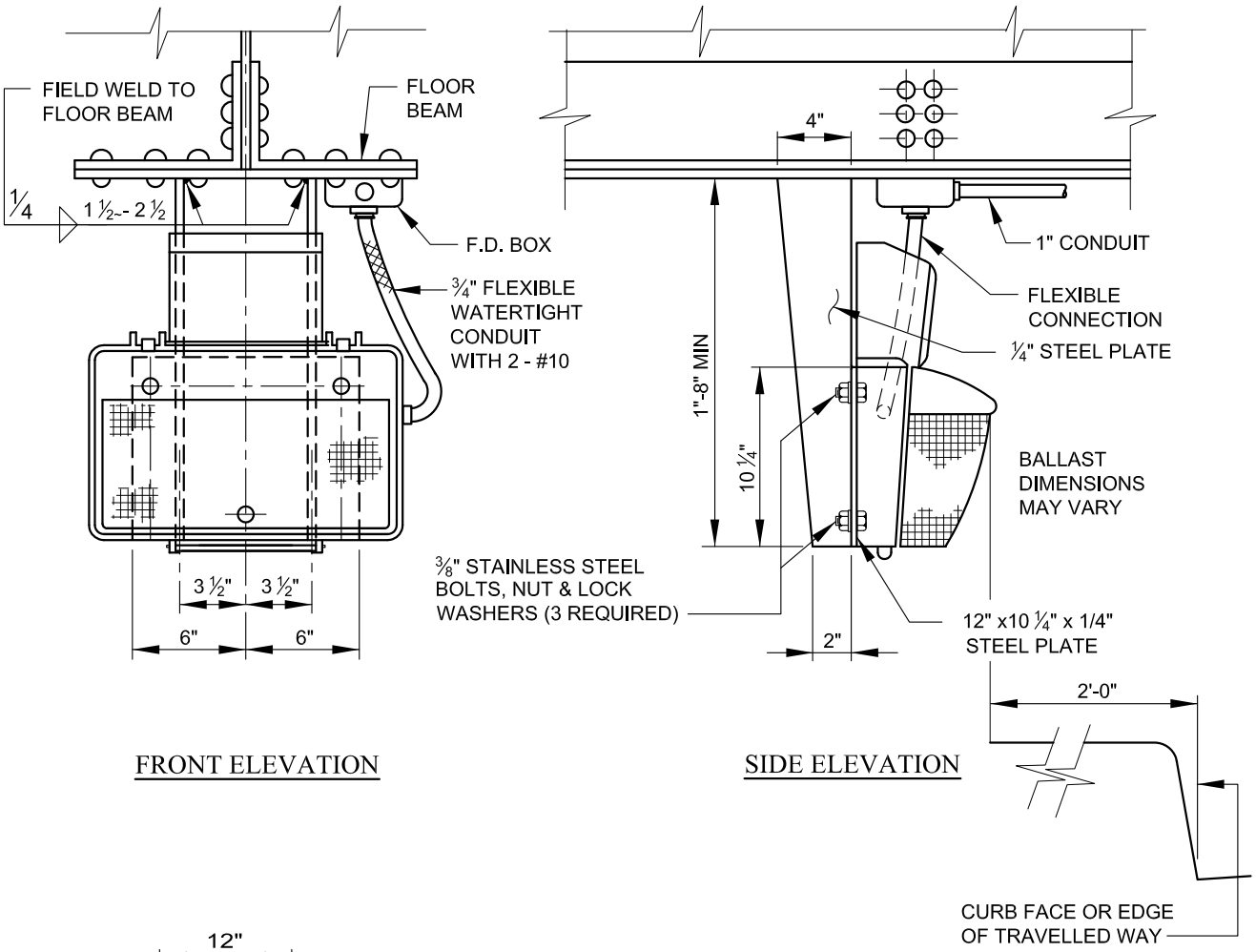

FRONT ELEVATION

SIDE ELEVATION

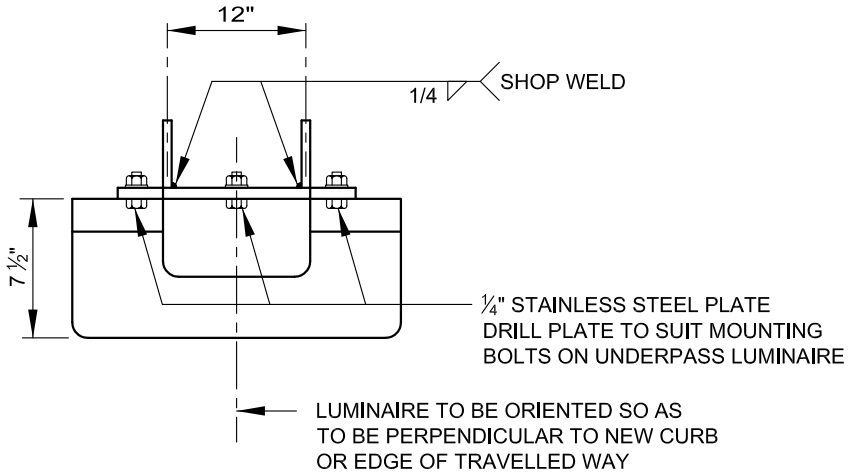

PLAN

MATERIAL: MOUNTING BRACKET TO BE OF SAME TYPE STEEL AS THE STRUCTURE FLOOR BEAM

APPROVED:

DIVISION CHIEF, TRANSPORTATION ENGINEERING AND CONSTRUCTION

DIRECTOR, DEPARTMENT OF TRANSPORTATION

CITY OF BALTIMORE
DEPARTMENT OF TRANSPORTATION
TRANSPORTATION ENGINEERING AND CONSTRUCTION

UNDERPASS LUMINAIRE TYPE II LUMINAIRE MOUNTING STEEL STRUCTURE

ISSUED	REVISED	REVISED
8 / 2010		

STANDARD NO. BC 823.02

SCALE : NONE

SHEET 1 OF 1

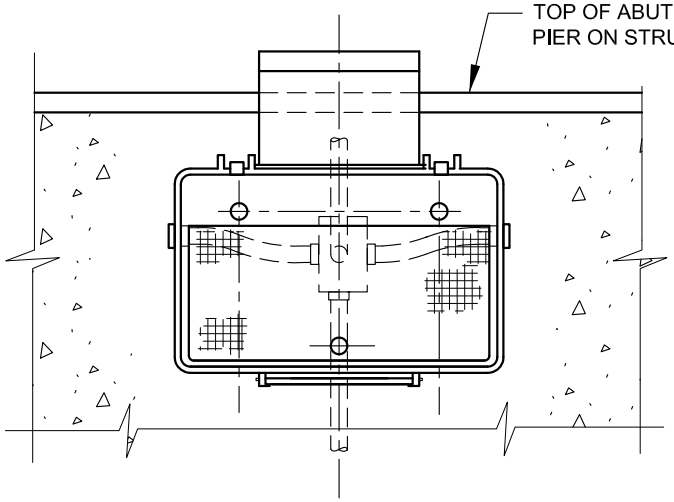

FRONT ELEVATION

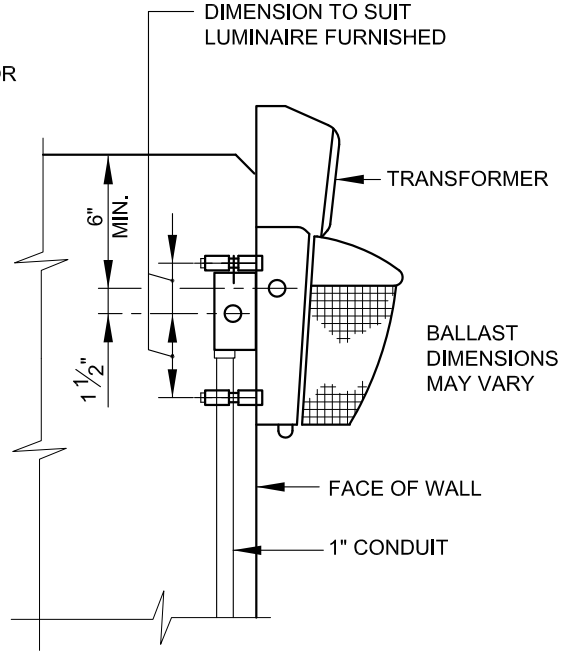

SIDE ELEVATION

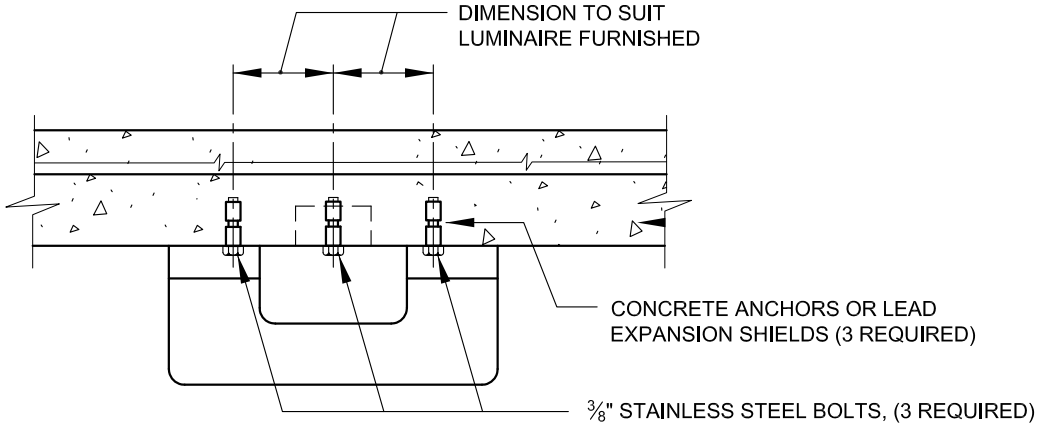

PLAN

APPROVED:

DIVISION CHIEF, TRANSPORTATION ENGINEERING AND CONSTRUCTION

DIRECTOR, DEPARTMENT OF TRANSPORTATION

CITY OF BALTIMORE
DEPARTMENT OF TRANSPORTATION
TRANSPORTATION ENGINEERING AND CONSTRUCTION

UNDERPASS LUMINAIRE TYPE III LUMINAIRE MOUNTING WALL, PIER OR ABUTMENT

ISSUED	REVISED	REVISED
8 / 2010		

STANDARD NO.
BC 823.03

SCALE : NONE

SHEET 1 OF 1

NOTES

1. 3-3" DUCTS TO BE INCLUDED IN THE DUCT SECTION WHERE INDICATED ON PLANS.
2. ALL CONCRETE SHALL BE MIX NO. 1.
3. THIS DIMENSION SHALL APPLY WHEN CONDUITS ARE INSTALLED IN PARALLEL SYSTEMS.
4. TYPICAL SPACERS SHALL BE PLACED AT EACH JOINT AND EVERY FIVE (5) FEET THEREAFTER.
5. ALL DIMENSIONS ARE BASED ON 1/4" WALL THICKNESS

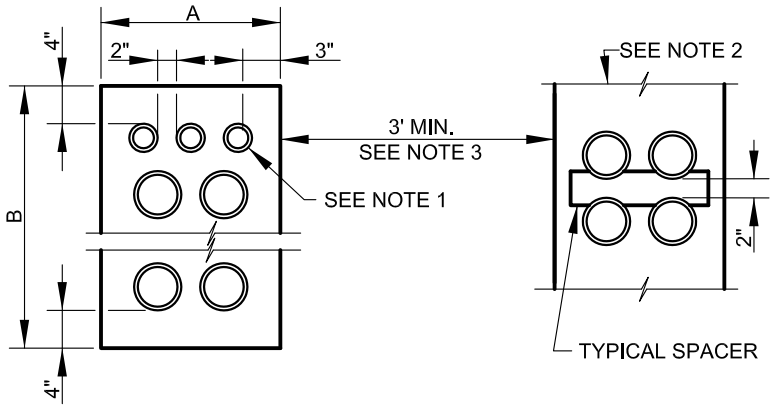

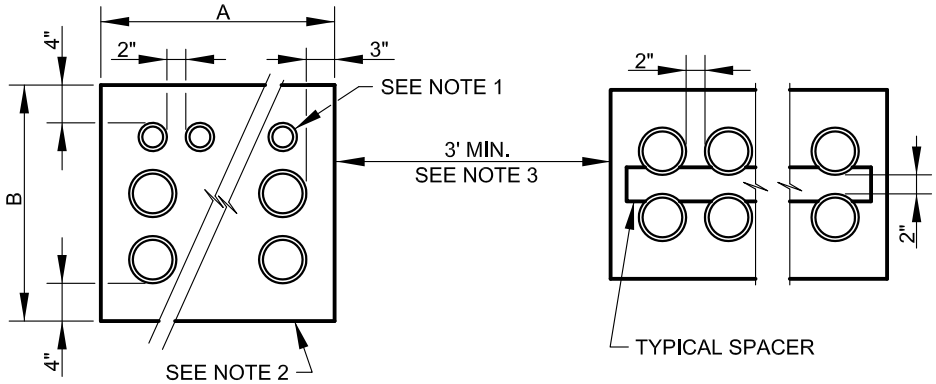

FOR 5" DUCT

CAT. CODE	TYPE	A	B	H	W
82430	X	1'-7"	1'-1 1/2"	1	2
82417	O	1'-7"	1'-9"	2	2
82415	M	1'-7"	2'-4 1/2"	3	2
82413	K	1'-7"	3'-0"	4	2
82410	H	1'-5"	3'-7 1/2"	5	2
82416	N	2'-6"	1'-9"	2	3
82414	L	2'-10"	1'-9"	2	4
82411	I	3'-5 1/2"	1'-9"	2	5
82433	Y	0'-11 1/2"	1'-1 1/2"	1	1

FOR 3" DUCT

CAT. CODE	TYPE	A	B	H	W
82435	Y	0'-9 1/2"	0'-11 1/2"	1	1
82432	X	1'-3"	0'-11 1/2"	1	2
82422	P	1'-8 1/2"	0'-11 1/2"	1	3

APPROVED:

CHIEF, CONDUIT DIVISION

DIRECTOR, DEPARTMENT OF TRANSPORTATION

CITY OF BALTIMORE
DEPARTMENT OF TRANSPORTATION
CONDUIT DIVISION

ISSUED	REVISED	REVISED
8 / 2010		

STANDARD DUCT SECTIONS

STANDARD NO.
BC 824.01-1

SCALE : NONE

SHEET 1 OF 2

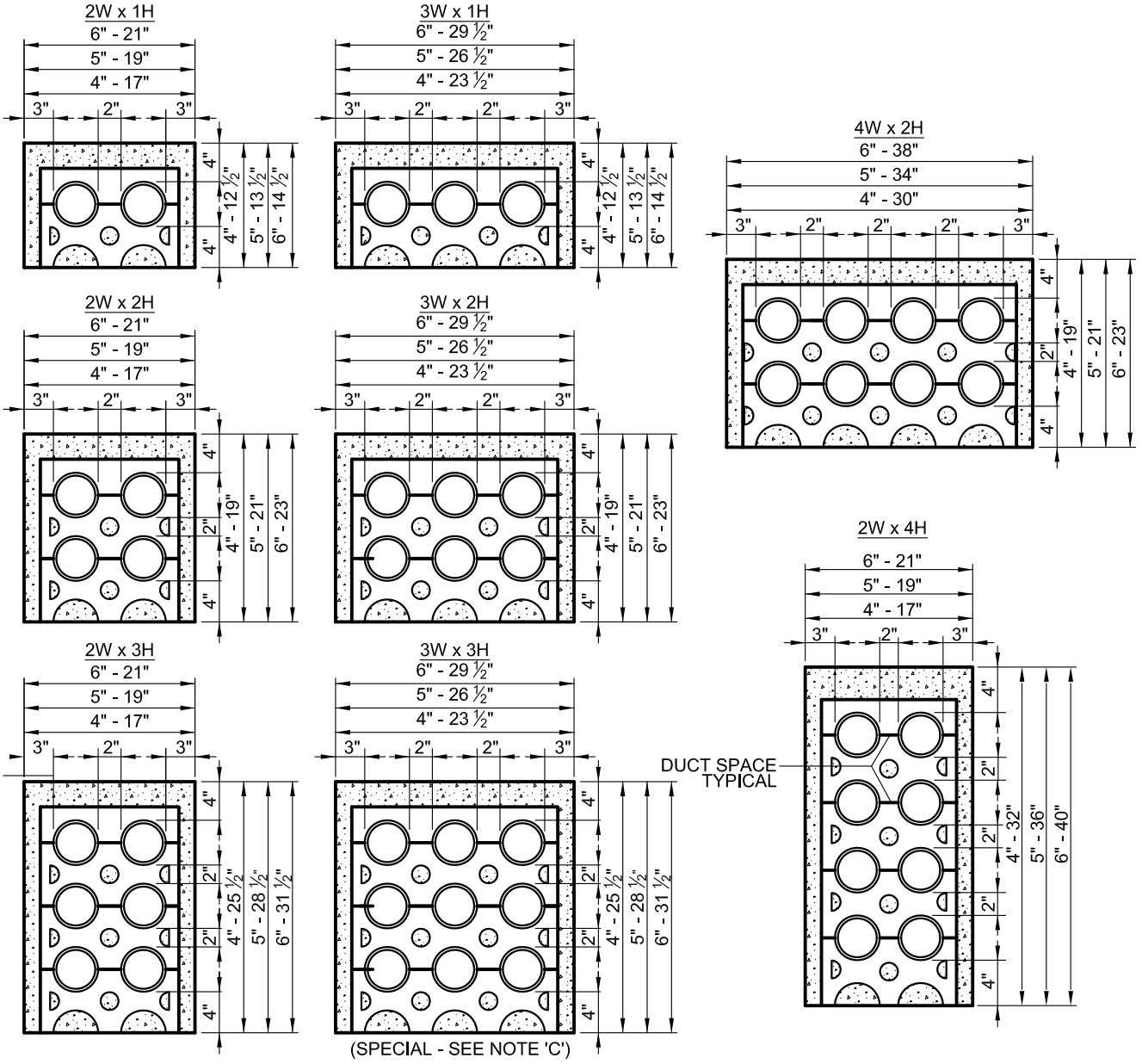

CUBIC YARDS OF CONCRETE PER LINEAR FOOT OF CONDUIT
(SEE NOTE 'A')

DUCT SIZE	NUMBER OF DUCTS	CUBIC YARDS OF CONCRETE
3"	2	.031
4"	2	.038
5"	2	.044
6"	2	.050
3"	3	.043
4"	3	.051
5"	3	.060
6"	3	.068

DUCT SIZE	NUMBER OF DUCTS	CUBIC YARDS OF CONCRETE
3"	4	.048
4"	4	.058
5"	4	.068
6"	4	.078
4"	6	.078
5"	6	.092
6"	6	.106

DUCT SIZE	NUMBER OF DUCTS	CUBIC YARDS OF CONCRETE
4"	8	.098
4"	8	.109 (SPECIAL)
5"	8	.116
5"	8	.131 (SPECIAL)
6"	8	.134
6"	8	.153 (SPECIAL)

NOTES: A. CONCRETE CALCULATIONS ARE BASED ON STANDARD CONDUIT ENVELOPE INDICATED ABOVE.
B. THE CONCRETE ENVELOPE WILL BE 3" ON BOTH SIDES, AND SHOULD NOT EXCEED 4". THE TOP AND BOTTOM OF THE ENVELOPE SHOULD NOT EXCEED 4" IN THICKNESS.
C. INSTALL #4 REINFORCING BARS THROUGH THE INSIDE EDGES OF THE DUCT SPACERS TO PROVIDE TEMPORARY ANCHORING. THIS PREVENTS THE CONDUIT FROM FLOATING OR CHANGING ALIGNMENT WHILE THE CONCRETE ENVELOPE IS BEING POURED.

APPROVED :

CHIEF, CONDUIT DIVISION

DIRECTOR, DEPARTMENT OF TRANSPORTATION

CITY OF BALTIMORE
DEPARTMENT OF TRANSPORTATION
CONDUIT DIVISION

ISSUED	REVISED	REVISED
8 / 2010		

STANDARD CONDUIT CROSS-SECTIONS

STANDARD NO.
BC 824.01-2

SCALE : NONE

SHEET 2 OF 2

Glossary

Duct = a single enclosed raceway for conductors or cable

Conduit = a structure containing one or more ducts

Conduit System = any combination of duct, conduits, manholes, handholes, and vaults joined to form an integrated whole

Terminator (Duct) = a plastic fitting used to terminate one or more ducts in a manhole wall

Duct Coupling = a plastic fitting used to join together two non–belled duct ends

10 Foot and 20 Foot Long PVC Utility Duct Data

Nominal Duct Size	Type	Average O.D.	Average I.D.	Minimum Wall Thickness
3”	DB–120	3.500	3.170	0.118
4”	DB–120	4.500	4.192	0.154
5”	DB–120	5.563	5.181	0.191
6”	DB–120	6.625	6.171	0.227

General Information

(A) PVC duct lengths used for electric distribution cables are 10 and 20 foot long.

(B) Each 10 or 20 foot section of duct has a belled end and a straight end. The) the straight end of another duct.

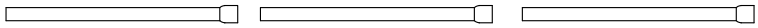

(C) If a bell end is damaged, cracked duct can be glued to the straight end of a non–damaged duct using a duct coupling.

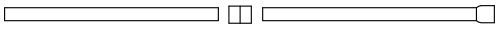

APPROVED:

CHIEF, CONDUIT DIVISION

DIRECTOR, DEPARTMENT OF TRANSPORTATION

CITY OF BALTIMORE
DEPARTMENT OF TRANSPORTATION
CONDUIT DIVISION

ISSUED	REVISED	REVISED
8 / 2010		

PLASTIC UTILITY DUCT
PVC (POLY VINYL CHLORIDE)
GENERAL INFORMATION

STANDARD NO.
BC 824.02-1

SCALE : NONE

SHEET 1 OF 2

General Information

(A) Duct spacers are used to hold PVC ducts in Position and maintain a 2" separation between adjacent ducts while pouring concrete.

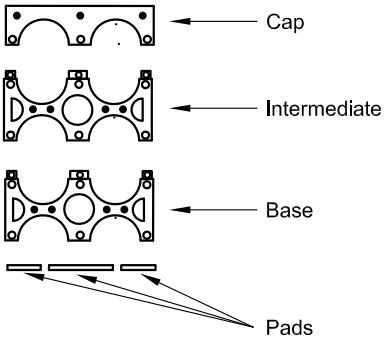

(B) There are 3 basic parts to the duct spacers -- the base, intermediate, and cap. If required, they are also pads/feet that can be used with 5" and 6" spacers for extra support in an unstable trench bottom.

(C) Standard cover for a primary conduit system is 42" and 42" cover for a secondary conduit system. Both of these dimensions are measured from final grade to the top of the concrete envelope of the duct.

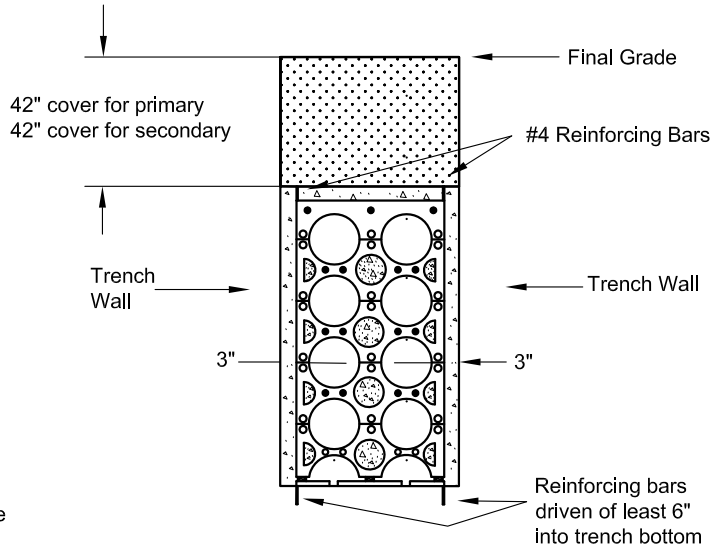

(D) Reinforcing bars are used to stabilize the duct and spacers when the concrete is poured. Drive #4 reinforcing bars through the inside edges of the duct spacers and at least 6" into the trench bottom.

(E) The sides of the trench are used as retaining walls when the concrete is poured. The distance from the outer duct diameter to the trench wall should be 3" wide. This in turn gives the required 3" apron around the whole duct bank.

(F) To properly support multiple ducts in a trench, the duct spacers are separated approximately 6-1/2 feet to 7 feet apart. Since PVC duct is manufactured in 10 foot and 20 foot lengths, this means there are two (2) spacers installed within one 10 foot section of duct and three (3) spacers installed within one 20 foot section of duct.

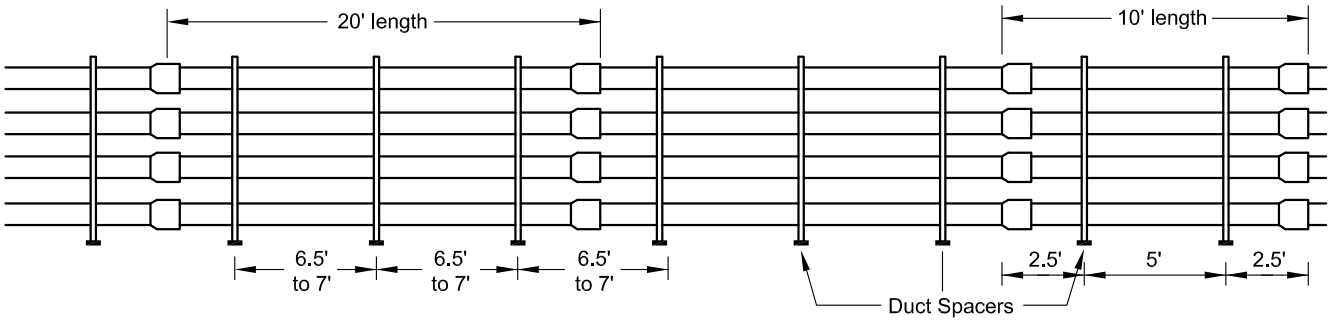

APPROVED:

CHIEF, CONDUIT DIVISION

DIRECTOR, DEPARTMENT OF TRANSPORTATION

CITY OF BALTIMORE
DEPARTMENT OF TRANSPORTATION
CONDUIT DIVISION

ISSUED	REVISED	REVISED
8 / 2010	10-9-86	

PLASTIC PVC DUCT SPACERS GENERAL INFORMATION

STANDARD NO.
BC 824.02-2

SCALE : NONE

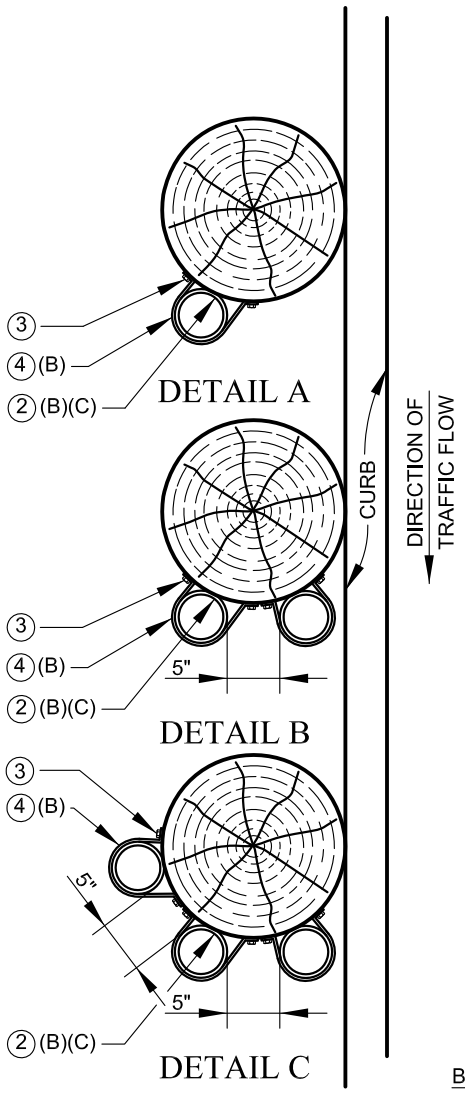

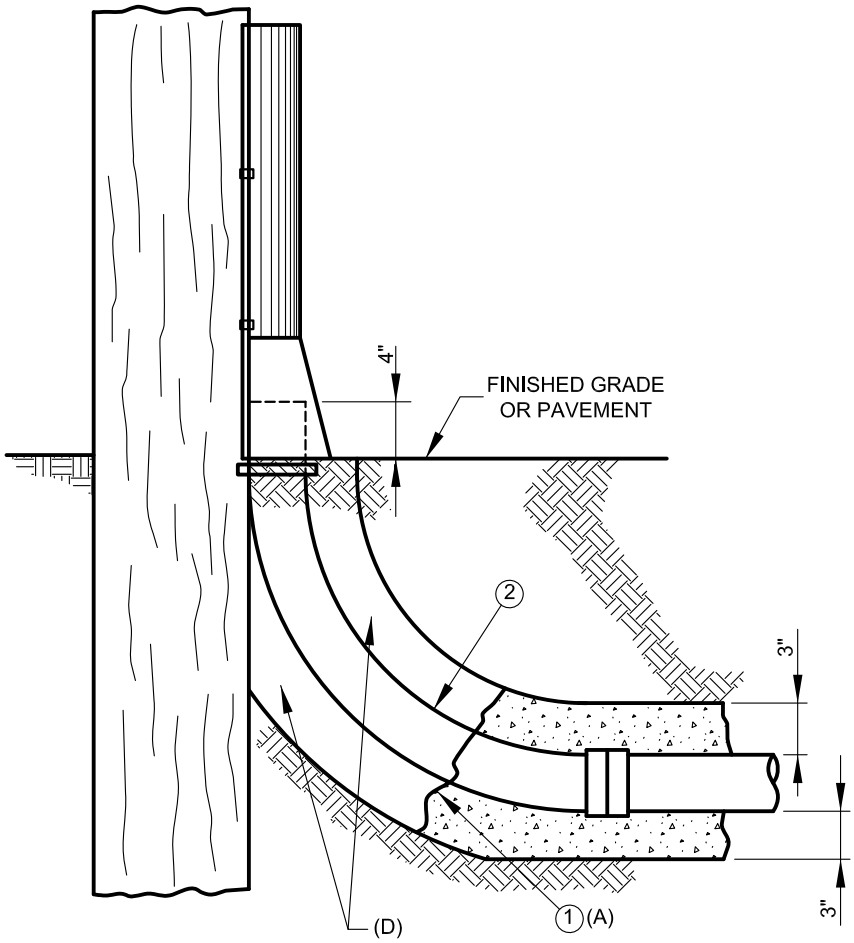

BILL OF MATERIAL

ITEM	DESCRIPTION	UNIT	QUANTITY
1	CONCRETE, MIX NO. 1	CU. YD.	AS REQUIRED
2	BEND, 36" RADIUS PVC DUCT { 3" 4" 5" 6" }	EACH	AS REQUIRED
3	SCREW 2", WASHER ATTACHED	BOX	AS REQUIRED
4	STRAP, PERFORATED GALVANIZED STEEL	ROLL	AS REQUIRED

INSTALLATION INSTRUCTIONS

(A) CONCRETE ENCASEMENT OF CONDUIT WILL END AFTER INCLUDING JOINT BETWEEN DUCT BEND(S) AND DUCT EXTENDING AWAY FROM POLES.

(B) FASTEN END OF DUCT BEND(S) TO POLE WITH STRAP. (SEE DETAIL "A" OR "B").

(C) SECURE DUCT BEND(S) AWAY FROM TRAFFIC FLOW IF POSSIBLE AND INSIDE CURBSIDE TANGENT TO POLE. (SEE DETAIL "A" OR "B").

(D) FILL IN AROUND BEND(S) WITH CLEAN COMPACTED BACKFILL.

(E) COORDINATE LOCATION OF CONNECTION(S) WITH CONCERNED OVERHEAD AND UNDERGROUND SUPERVISION.

APPROVED:

CHIEF, CONDUIT DIVISION

DIRECTOR, DEPARTMENT OF TRANSPORTATION

CITY OF BALTIMORE
DEPARTMENT OF TRANSPORTATION
CONDUIT DIVISION

ISSUED	REVISED	REVISED
8 / 2010		

CONDUIT POLE CONNECTION SINGLE, DOUBLE AND TRIPLE

STANDARD NO.
BC 824.05

SCALE : NONE

SHEET 1 OF 1

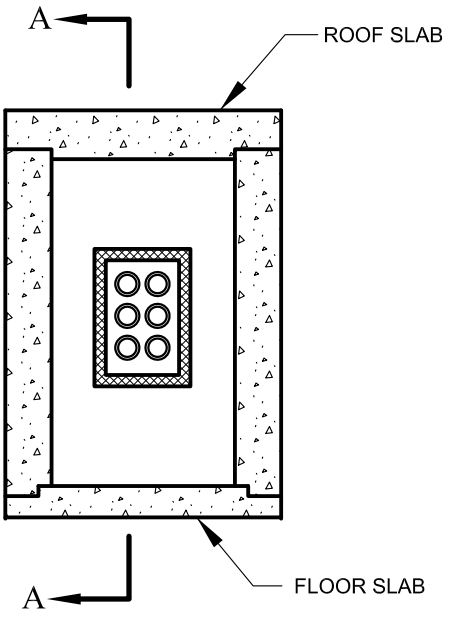

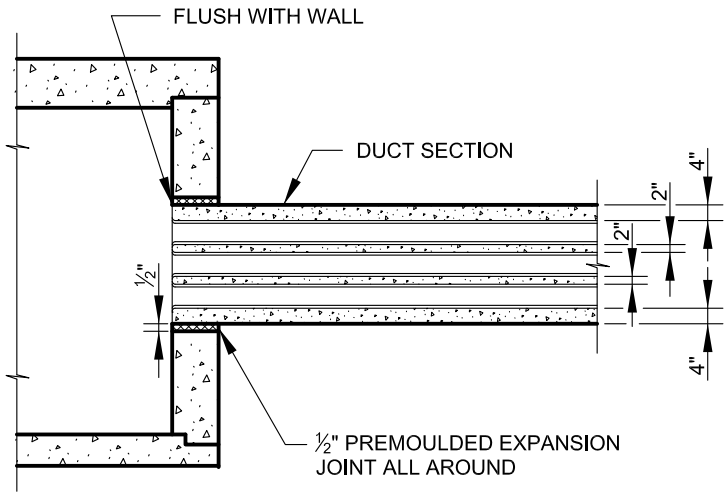

SECTION A-A

APPROVED:

CHIEF, CONDUIT DIVISION

DIRECTOR, DEPARTMENT OF TRANSPORTATION

CITY OF BALTIMORE
DEPARTMENT OF TRANSPORTATION
CONDUIT DIVISION

DUCT ENTRANCE INTO MANHOLE

ISSUED	REVISED	REVISED
8 / 2010		

STANDARD NO.
BC-824.06

SCALE : NONE

SHEET 1 OF 1

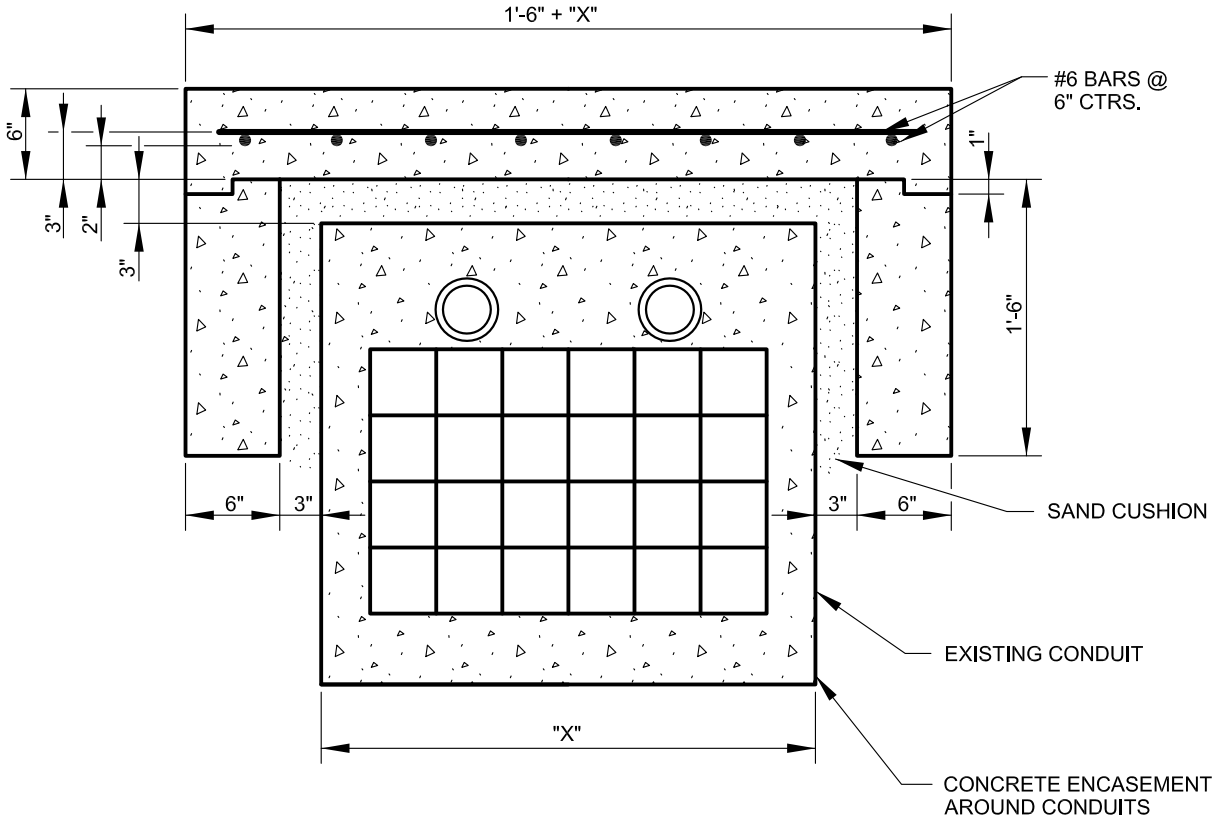

CONCRETE TO BE MIX NO. 3

APPROVED:

CHIEF, CONDUIT DIVISION

DIRECTOR, DEPARTMENT OF TRANSPORTATION

CITY OF BALTIMORE
DEPARTMENT OF TRANSPORTATION
CONDUIT DIVISION

DUCT REINFORCEMENT AT RAILROAD CROSSING

ISSUED	REVISED	REVISED
8 / 2010		

STANDARD NO.
BC 824.07

SCALE : NONE

SHEET 1 OF 1

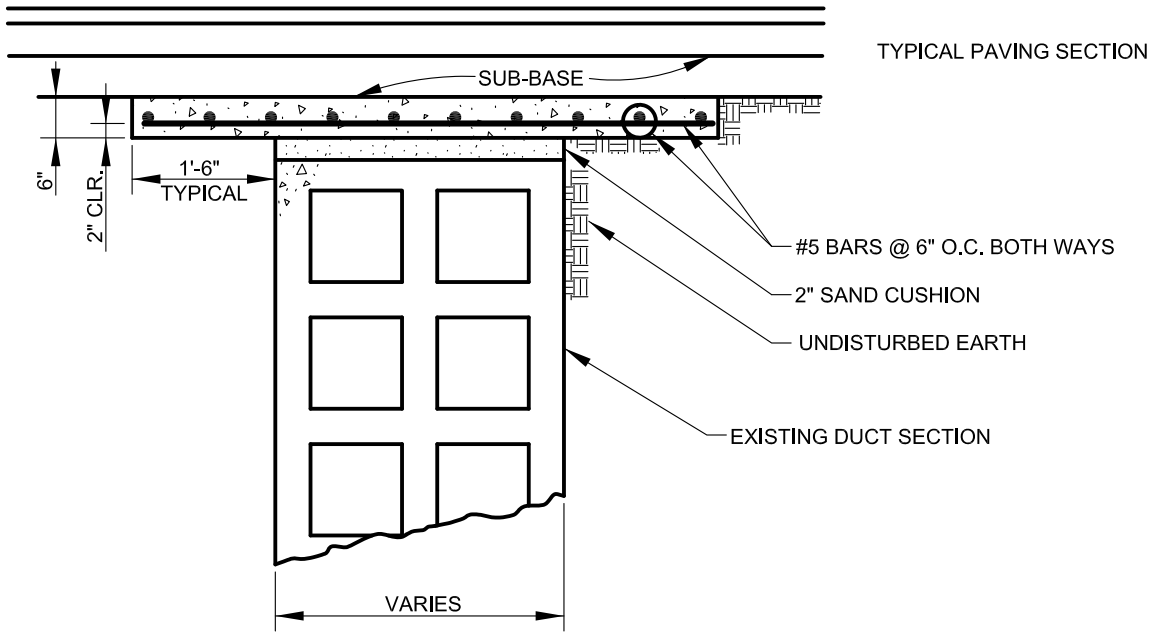

ALL CONCRETE TO BE MIX NO. 3. ALL REINFORCING STEEL TO CONFORM TO A.S.T.M. 615, GRADE 40

APPROVED:

CHIEF, CONDUIT DIVISION

DIRECTOR, DEPARTMENT OF TRANSPORTATION

CITY OF BALTIMORE
DEPARTMENT OF TRANSPORTATION
CONDUIT DIVISION

REINFORCING SLAB FOR SHALLOW ELECTRIC DUCT

ISSUED	REVISED	REVISED
8 / 2010		

STANDARD NO.
BC 824.08

SCALE : NONE

SHEET 1 OF 1

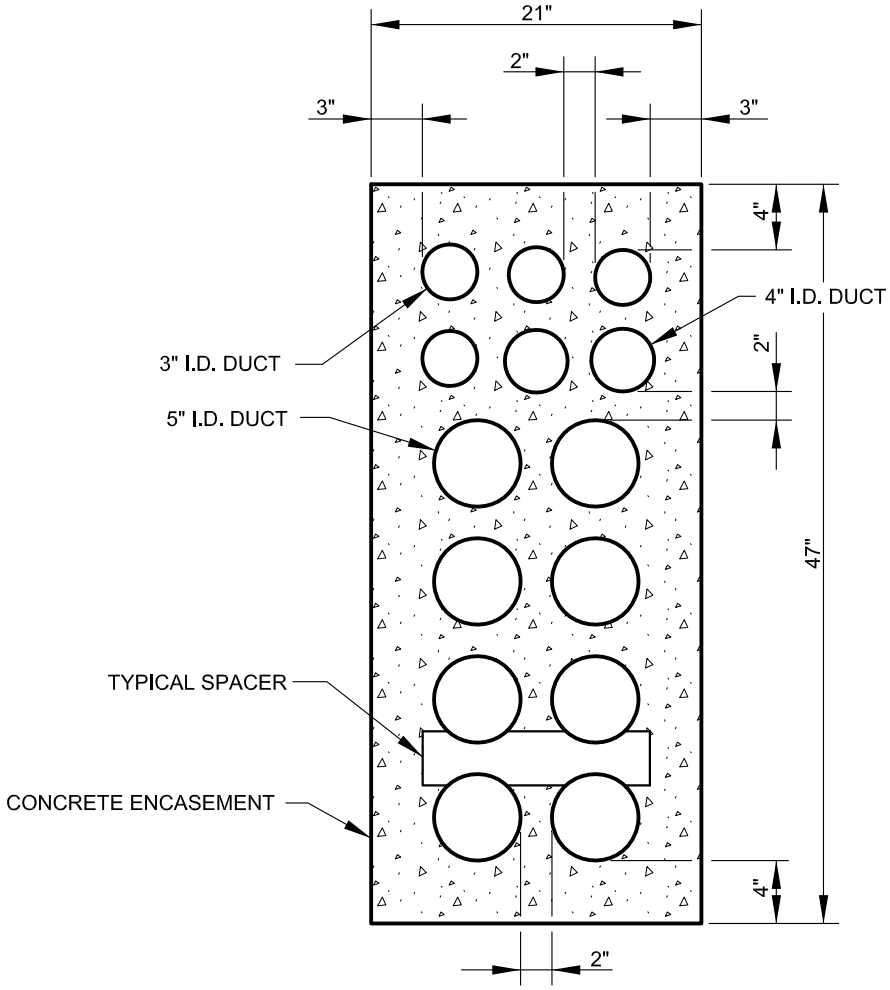

CUBIC YARDS OF CONCRETE PER LINEAR FOOT OF CONDUIT
(SEE NOTE A)

CONCRETE MIX NO. 1 (1/2" PEA GRAVEL) 2500 PSI, 6" SLUMP

NOTES:

A. CONCRETE CALCULATIONS ARE BASED ON STANDARD CONDUIT ENVELOPE INDICATED ABOVE.

B. WHEN CONDITIONS REQUIRE A LARGER THAN STANDARD ENVELOPE, IN NO CASE SHALL THE ENVELOPE EXCEED 6" ON THE SIDES AND 4" ON THE TOP AND BOTTOM.

C. INSTALL #4 REINFORCING BARS THROUGH THE INSIDE EDGES OF THE DUCT SPACERS TO PROVIDE TEMPORARY ANCHORING. THIS PREVENTS THE CONDUIT FROM FLOATING OR CHANGING ALIGNMENT WHILE THE CONCRETE ENVELOPE IS BEING POURED.

D. 3" DUCTS ARE NORMALLY ALLOCATED TO COMMUNICATION COMPANIES AND THE LARGEST DIAMETER DUCTS ARE ALLOCATED TO ELECTRIC SUPPLY CABLES.

APPROVED:

CHIEF, CONDUIT DIVISION

DIRECTOR, DEPARTMENT OF TRANSPORTATION

CITY OF BALTIMORE
DEPARTMENT OF TRANSPORTATION
CONDUIT DIVISION

ISSUED	REVISED	REVISED
8 / 2010		

DUCT TYPICAL SECTION 8-5", 4-3" AND 2-4"

STANDARD NO.
BC 824.09

SCALE : NONE

SHEET 1 OF 1

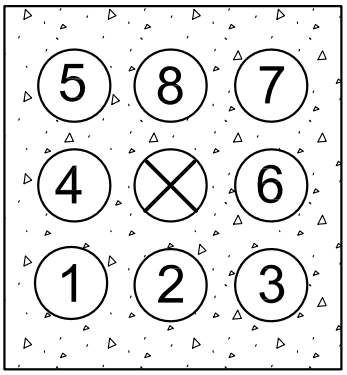

8 - 5"

TRANSITION SECTION

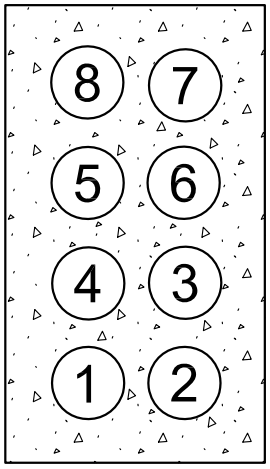

TYPICAL 8 - 5" DUCT SECTION
(2W x 4H)

CITY OF BALTIMORE 1797	APPROVED: CHIEF, CONDUIT DIVISION DIRECTOR, DEPARTMENT OF TRANSPORTATION	CITY OF BALTIMORE DEPARTMENT OF TRANSPORTATION CONDUIT DIVISION	ISSUED 8 / 2010	REVISED	REVISED
		DUCT TRANSITION TO PRECAST RECESSED EXTENSION	STANDARD NO. BC 824.10		
			SCALE : NONE	SHEET 1 OF 1	

STEEL SCHEDULE

MARK	SIZE	LENGTH	NO. OF PIECES
A	9	13'-0"	8
B	6	5'-9"	4
C	6	5'-2"	4
D	6	4'-10"	6
E	6	7'-0"	14
F	9	7'-0"	6
G	6	2'-9"	4
H	6	2'-2"	4
I	6	1'-10"	6
J	5	4'-8"	8
K	6	13'-0"	12
L	6	5'-6"	8
M	6	7'-0"	12
N	7	7'-0"	12
O	6	2'-6"	8
P	5	6'-0"	120
Q	6	7'-0"	28
Q	6	7'-0"	32
Q	6	7'-0"	36
R *	5	7'-4"	48
R **	5	8'-4"	48
R ***	5	9'-4"	48
S *	6	13'-0"	28
S **	6	13'-0"	32
S ***	6	13'-0"	36
T	5	3'-2"	8

* 7 FT HEADROOM

** 8 FT HEADROOM

*** 9 FT HEADROOM

A THRU N

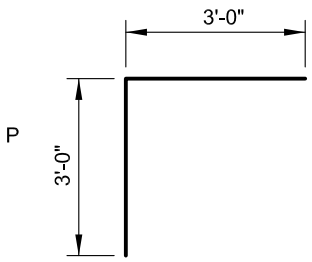

BAR SUPPORTS

(A) 1 ½ - BC - A



(B) # 3 REINFORCING BARS INSTALL AT RANDOM LOCATIONS, AS NEEDED.

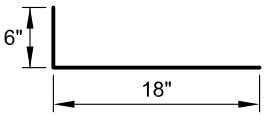

(C) PULLING IRONS SHALL BE INSTALLED AT THE JUNCTION OF THE FLOOR AND WALL AND WALL AND ROOF. LOCATION OF PULLING IRONS TO BE CENTERED ON END WALLS AND OPPOSITE DUCT BANKS, OR KNOCK - OUTS ON SIDE WALLS.



NOTES:
THIS MANHOLE WAS DESIGNED IN ACCORDANCE WITH A.A.S.H.T.O. STANDARD SPECIFICATIONS FOR HIGHWAY BRIDGES DATED 1996, INCLUDING ALL INTERIM SPECIFICATIONS THROUGH 2002. ALL MATERIALS AND CONSTRUCTION SHALL CONFORM TO BALTIMORE CITY STANDARDS.

LOADING: HS25 TRUCK LOADING

MATERIALS
CONCRETE:
4,000 PSI COMPRESSIVE STRENGTH AFTER 28 DAYS.
CONCRETE DESIGN: SERVICE LOAD DESIGN METHOD - f'_c=1,600 PSI.
STEEL
60.000 PSI YIELD STRENGTH - GRADE 60
REINFORCING STEEL DESIGN - f_s=24,000 PSI
REINFORCING STEEL IN THE ROOF SLAB SHALL BE EPOXY COATED

APPROVED:

CHIEF, CONDUIT DIVISION

DIRECTOR, DEPARTMENT OF TRANSPORTATION

CITY OF BALTIMORE
DEPARTMENT OF TRANSPORTATION
CONDUIT DIVISION

ISSUED	REVISED	REVISED
8 / 2010		

STEEL DETAILS FOR 6 FT x 12 FT LINE MANHOLE

STANDARD NO.
BC 825.01

SCALE : NONE

SHEET 1 OF 1

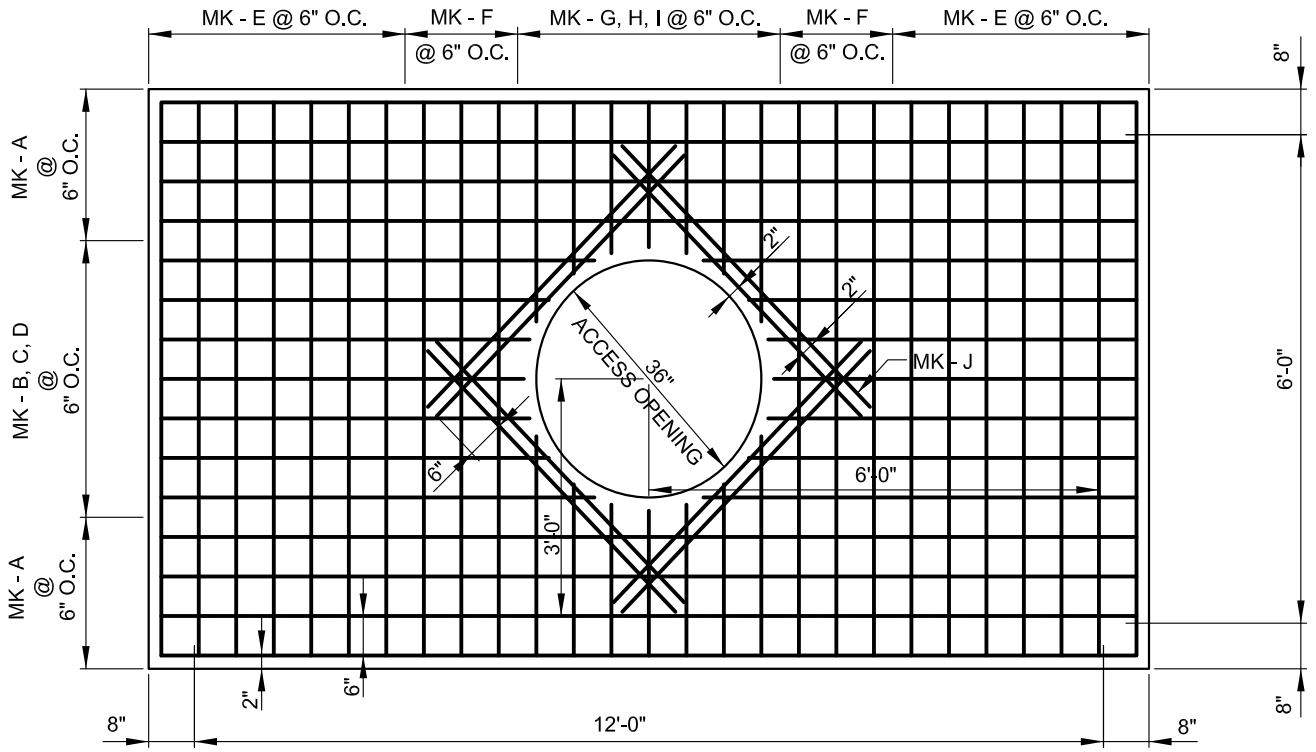

ROOF - MAIN REINFORCING

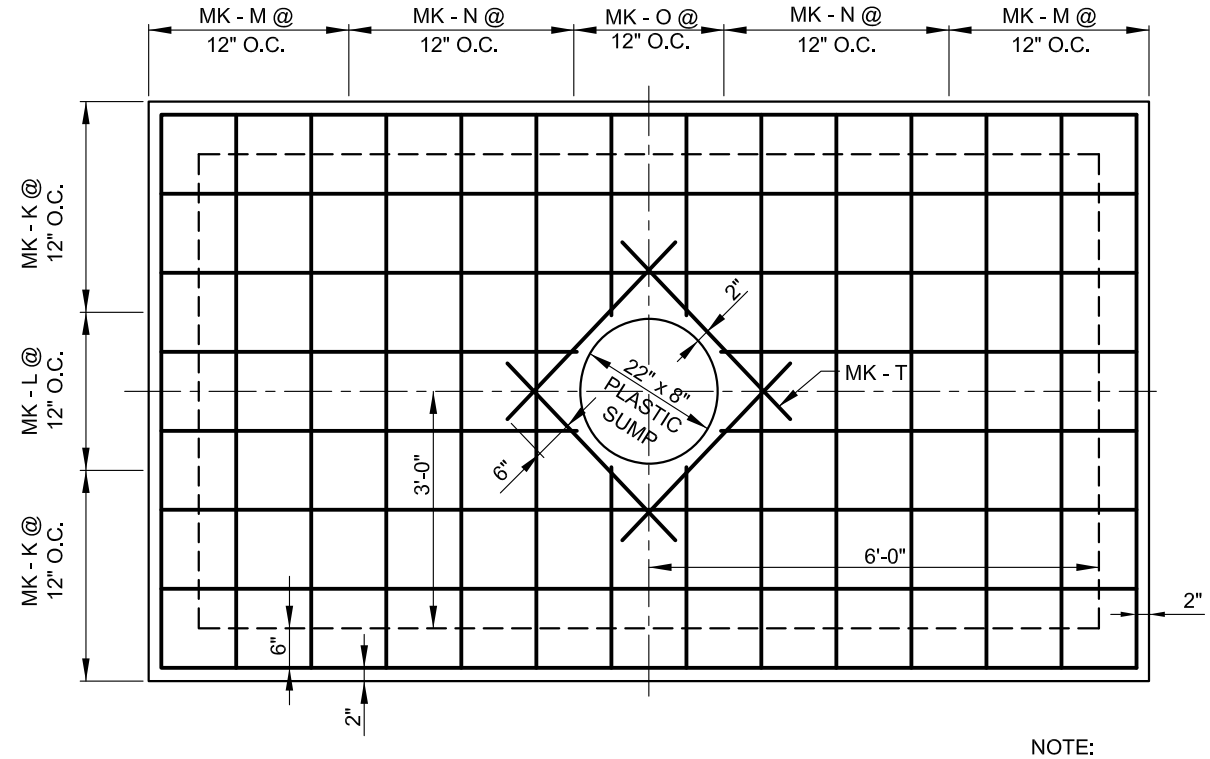

BASE - MAIN REINFORCING

NOTE:
ALL STEEL REINFORCING IS SYMMETRICAL AROUND CENTERLINE

APPROVED:

CHIEF, CONDUIT DIVISION

DIRECTOR, DEPARTMENT OF TRANSPORTATION

CITY OF BALTIMORE
DEPARTMENT OF TRANSPORTATION
CONDUIT DIVISION

ISSUED	REVISED	REVISED
8 / 2010		

DETAILS FOR 6 FT x 12 FT POURED IN PLACE LINE MANHOLE

STANDARD NO.
BC 825.02-1

SCALE : NONE

SHEET 1 OF 2

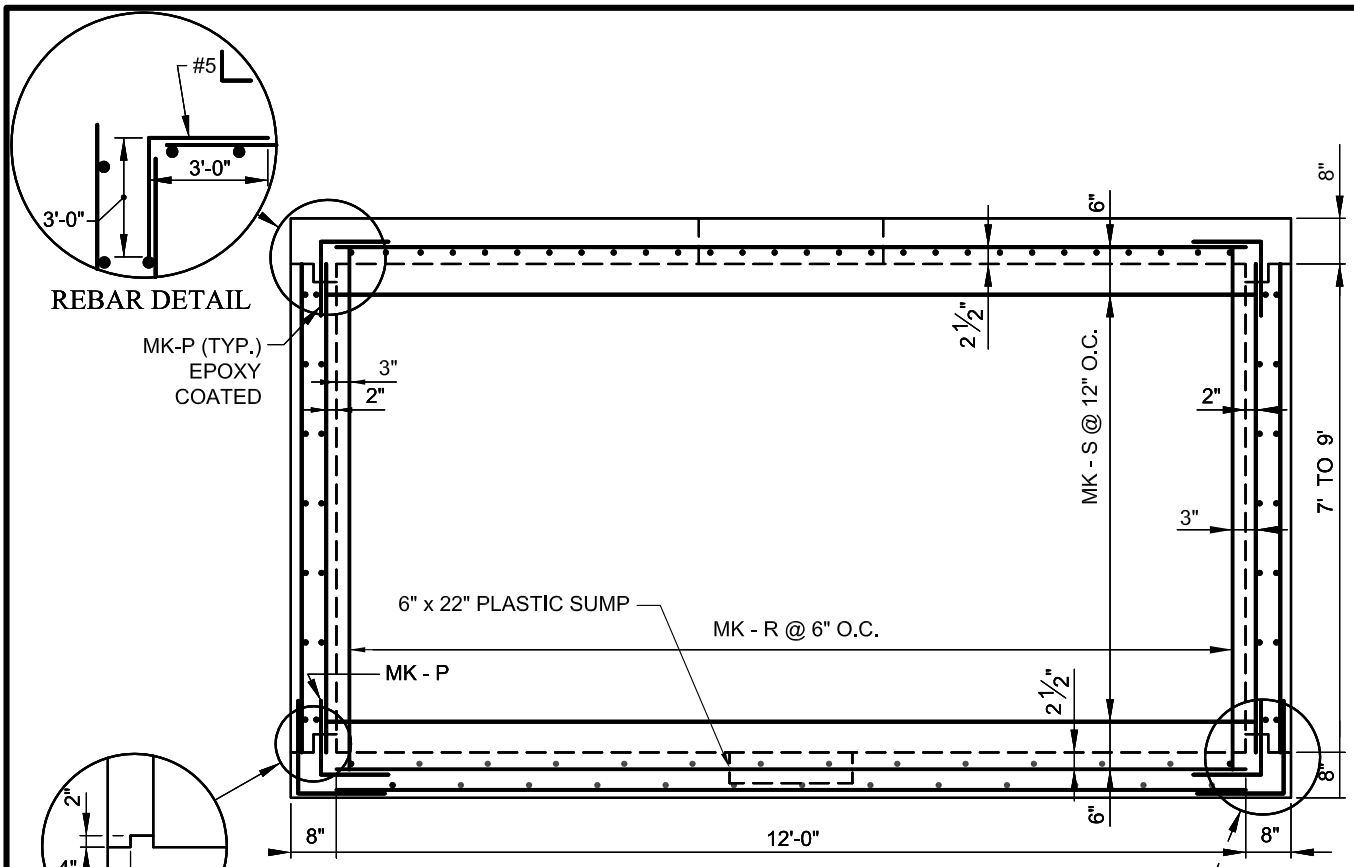

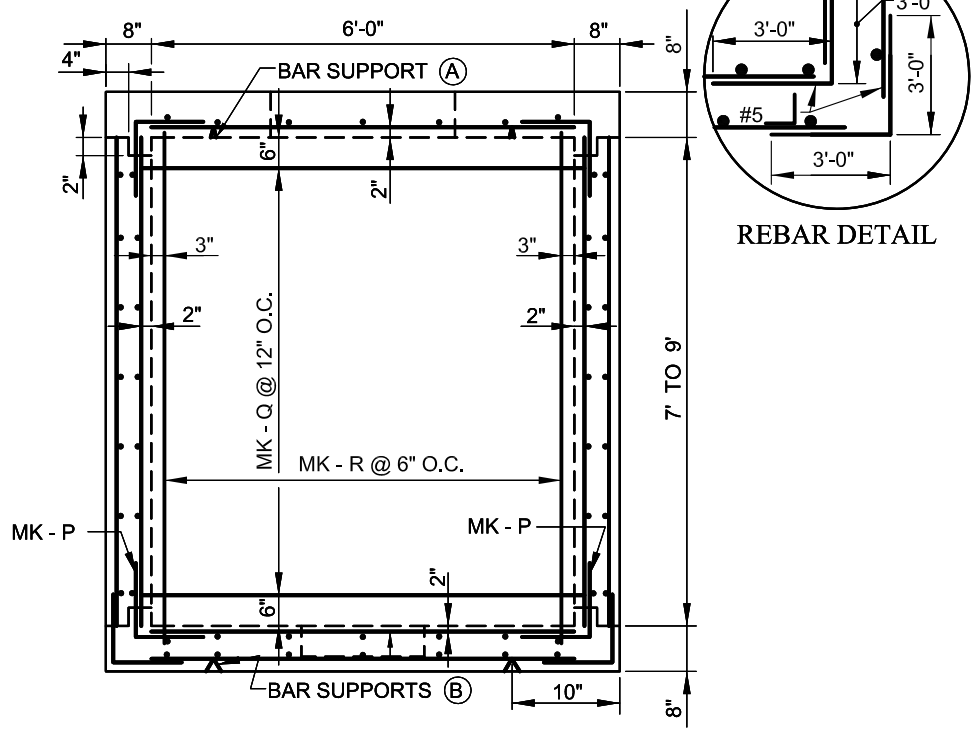

END WALLS

NOTE: SEE STEEL DETAIL SHEET FOR PULLING IRON REQUIREMENTS.

APPROVED:

CHIEF, CONDUIT DIVISION

DIRECTOR, DEPARTMENT OF TRANSPORTATION

CITY OF BALTIMORE
DEPARTMENT OF TRANSPORTATION
CONDUIT DIVISION

ISSUED	REVISED	REVISED
8 / 2010		

DETAILS FOR 6 FT x 12 FT POURED IN PLACE LINE MANHOLE

STANDARD NO.
BC 825.02-2

SCALE : NONE

SHEET 2 OF 2

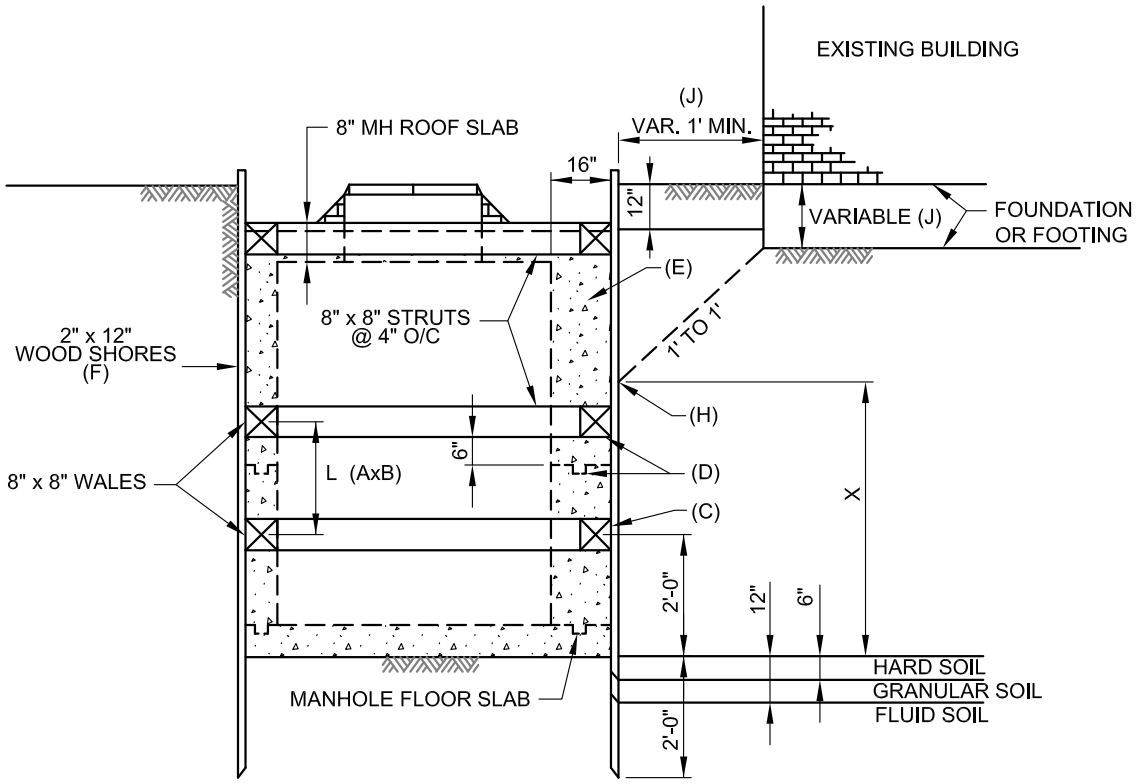

SECTION A-A

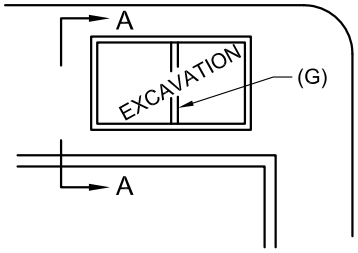

PLAN

NOTES:

(A) WHEN "X" IS 5' OR LESS, USE 2 SETS OF WALERS WITH ASSOCIATED STRUTS (BRACES), L IS EQUAL TO OR LESS THAN 2.5'.
(B) WHEN "X" IS 10' OR LESS, L=2'. THE WALER SPACING MUST BE MAINTAINED WITH ADDITIONAL BRACES TO A POINT AT OR ABOVE THE 1 TO 1 SLOPE LINE THAT INTERSECTS THE EXCAVATION.
(C) REMOVE THIS SET OF WALERS AND STRUTS AFTER POURING MANHOLE FLOOR SLAB.
(D) CONSTRUCT WALLS TO THIS ELEVATION BEFORE REMOVING SECOND SET OF WALERS AND STRUTS.
(E) POURED CONCRETE WALL TO BE 16" WIDE ON BUILDING SIDE ONLY.
(F) 2" WOOD SHORES TO BE DENSE STRUCTURAL #65 - TREATED (MATERIAL NO. 11-336) LEFT IN PLACE.
(G) WALERS AND STRUTS LONGER THAN 10' ARE TO BE BRACED AT OR NEAR THE CENTER POINT IN BOTH DIRECTIONS WITH 2" x 6".
(H) FROM THIS POINT, WOOD SHORES MUST BE KEPT BELOW EXCAVATION, (6" HARD SOIL, 12" GRANULAR SOIL, 24" FLUID SOIL).
(J) CONSTRUCTION DRAWING SHALL CLEARLY INDICATE EXCAVATION DISTANCE FROM NEAREST ADJACENT BUILDING AND DEPTH OF FOUNDATION OR FOOTING.

APPROVED:

CHIEF, CONDUIT DIVISION

DIRECTOR, DEPARTMENT OF TRANSPORTATION

CITY OF BALTIMORE
DEPARTMENT OF TRANSPORTATION
CONDUIT DIVISION

ISSUED	REVISED	REVISED
8 / 2010		

BRACED COFFER DAM FOR POURED IN PLACE MANHOLE

STANDARD NO.
BC 825.04

SCALE : NONE

SHEET 1 OF 1

STEEL SCHEDULE

MARK	SIZE	LENGTH	NO. OF PIECES
A *	9	13'-0"	8
B **	6	5'-9"	4
C ***	6	5'-2"	4
D *	6	4'-10"	6
E **	6	7'-0"	14
F ***	9	7'-0"	6
G *	6	2'-9"	4
H **	6	2'-2"	4
I ***	6	1'-10"	6
J	5	4'-8"	8
K	6	13'-0"	12
L	6	5'-6"	8
M	6	7'-0"	12
N	7	7'-0"	12
O	6	2'-6"	8
P	5	6'-0"	120
Q	6	7'-0"	28
Q	6	7'-0"	32
Q	6	7'-0"	36
R *	5	7'-4"	48
R **	5	8'-4"	48
R ***	5	9'-4"	48
S *	6	13'-0"	28
S **	6	13'-0"	32
S ***	6	13'-0"	36
T	5	3'-2"	8

A THRU N

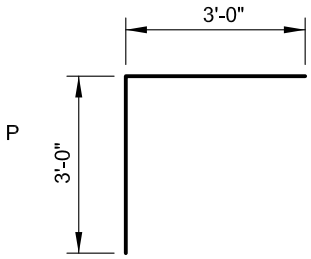

BAR SUPPORTS

(A) 1 ½ - BC - A



(B) # 3 REINFORCING BARS INSTALL AT RANDOM LOCATIONS, AS NEEDED.

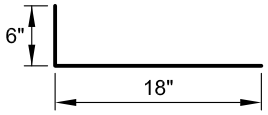

(C) PULLING IRONS SHALL BE INSTALLED AT THE JUNCTION OF THE FLOOR AND WALL AND WALL AND ROOF. LOCATION OF PULLING IRONS TO BE CENTERED ON END WALLS AND OPPOSITE DUCT BANKS, OR KNOCK - OUTS ON SIDE WALLS.



* 7 FT HEADROOM

** 8 FT HEADROOM

*** 9 FT HEADROOM

NOTES:
THIS MANHOLE WAS DESIGNED IN ACCORDANCE WITH ACI STANDARD 318-71 AND ALL MATERIALS AND CONSTRUCTION SHALL CONFORM TO THIS STANDARD.

MATERIALS:
CONCRETE
4,000 PSI COMPRESSIVE STRENGTH AFTER 28 DAYS
STEEL
60.000 PSI YIELD STRENGTH - GRADE 60

LOADING: HS 25 TRUCK LOADING

SEE B.C. 825.08 FOR GRATING DETAILS

APPROVED:

CHIEF, CONDUIT DIVISION

DIRECTOR, DEPARTMENT OF TRANSPORTATION

CITY OF BALTIMORE
DEPARTMENT OF TRANSPORTATION
CONDUIT DIVISION

ISSUED	REVISED	REVISED
8 / 2010		

STEEL DETAILS FOR 6 FT x 12 FT TRANSFORMER MANHOLE

STANDARD NO.
BC 825.05

SCALE : NONE

SHEET 1 OF 1

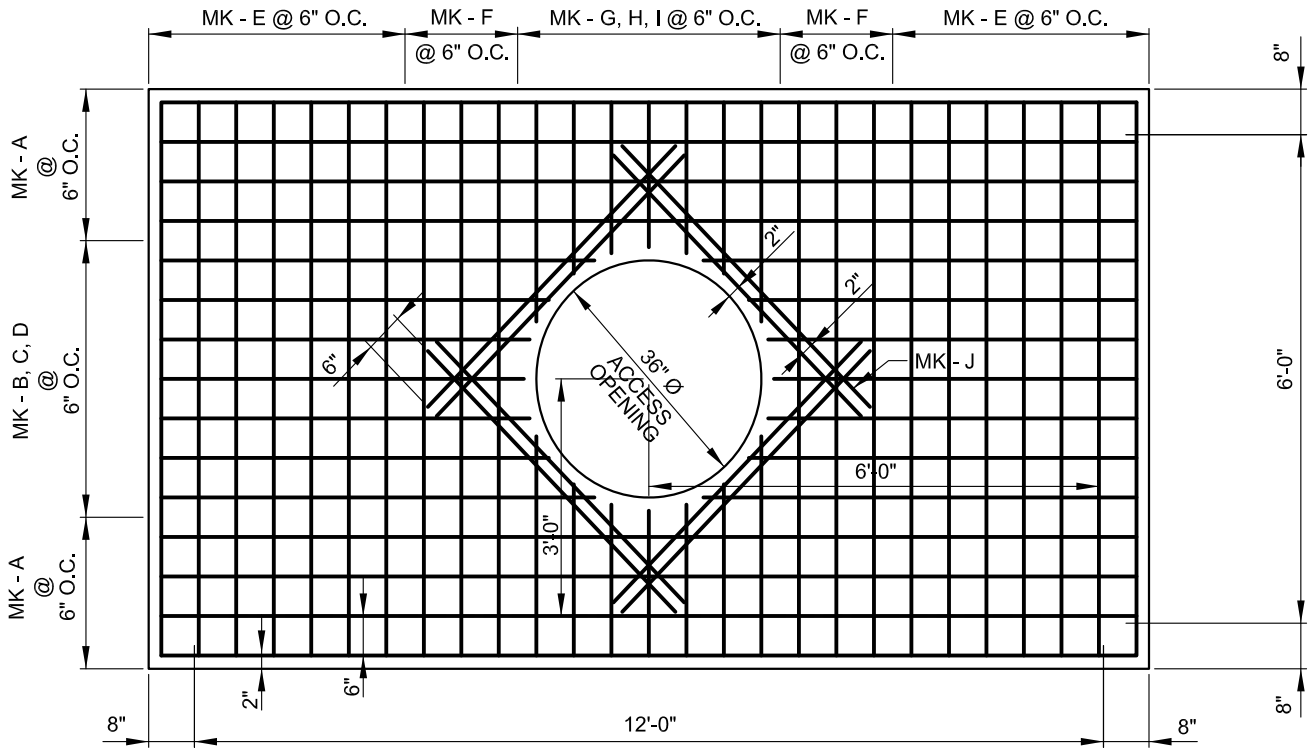

ROOF- MAIN REINFORCING

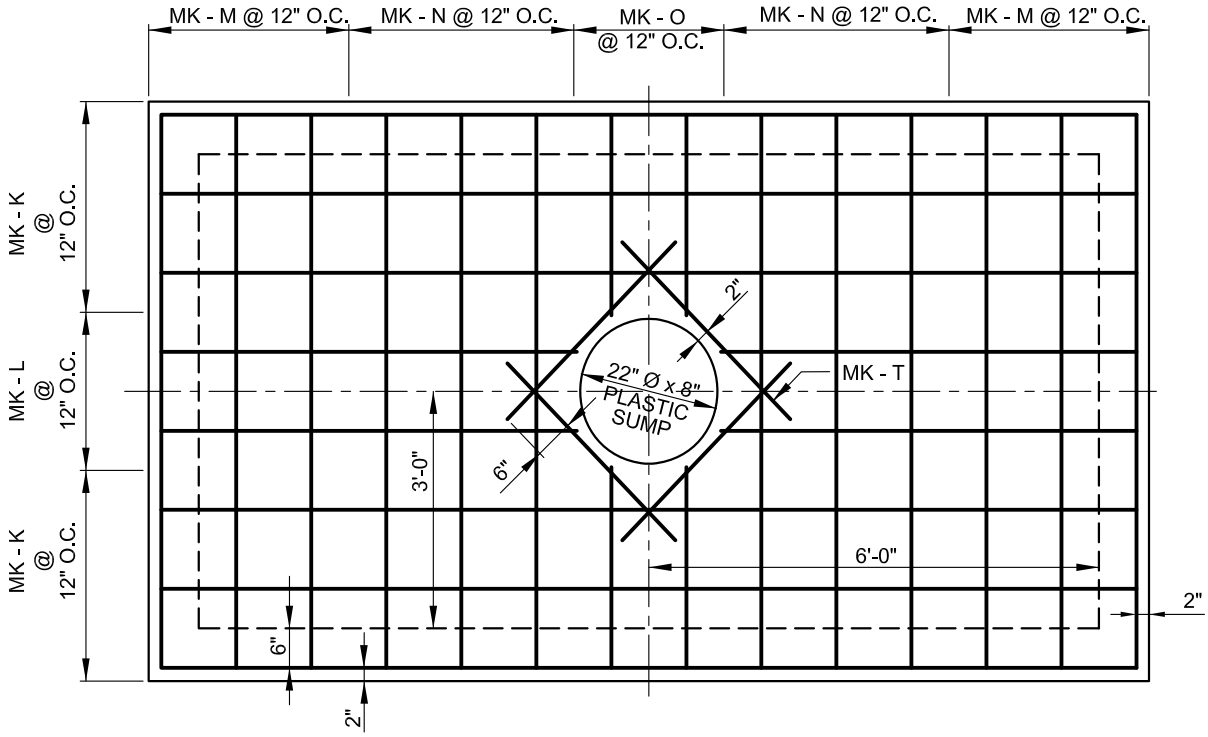

BASE - MAIN REINFORCING

CITY OF BALTIMORE 1797	APPROVED: Richard L. Barton, CHIEF, CONDUIT DIVISION; Khalil Zaied, DIRECTOR, DEPARTMENT OF TRANSPORTATION	CITY OF BALTIMORE DEPARTMENT OF TRANSPORTATION CONDUIT DIVISION	ISSUED: 8 / 2010	REVISED	REVISED
		DETAILS FOR 6 FT x 12 FT POURED IN PLACE TRANSFORMER MANHOLE	STANDARD NO. BC 825.06-1		
			SCALE : NONE	SHEET 1 OF 2	

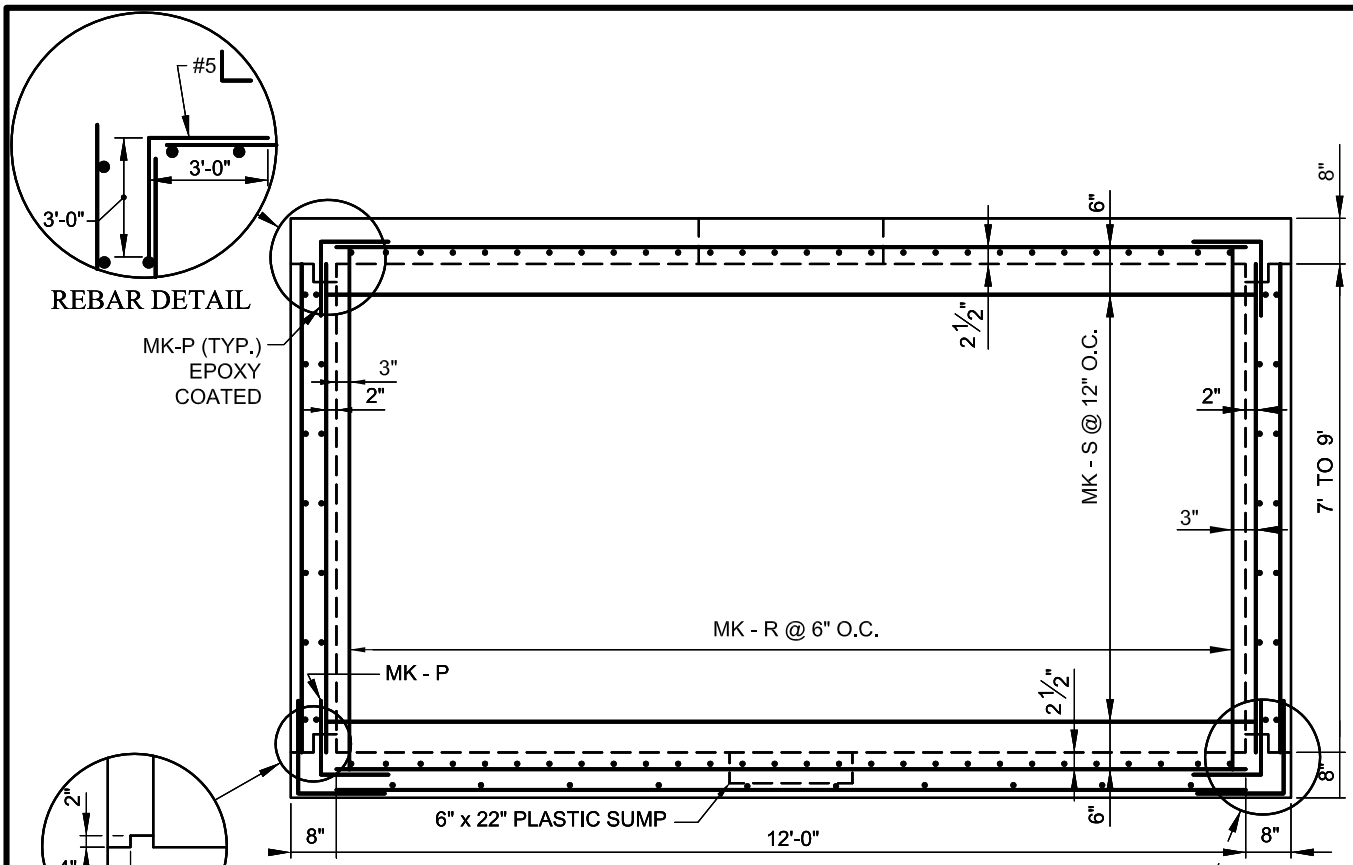

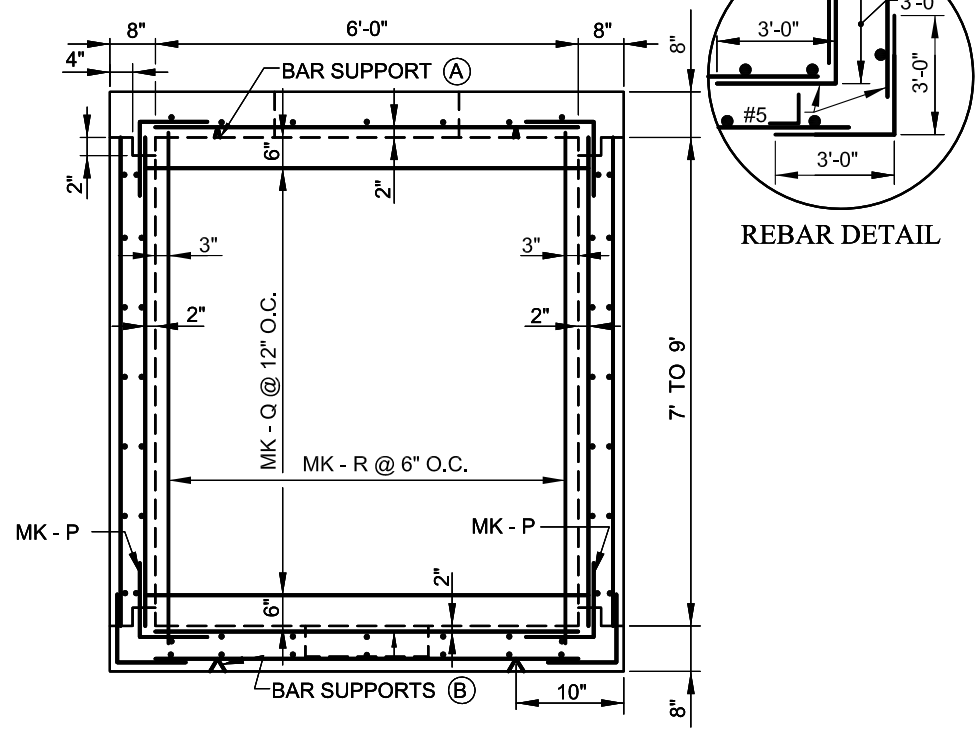

END WALLS

SEE B.C. 825.05 FOR PULLING IRON REQUIREMENTS

APPROVED:

CHIEF, CONDUIT DIVISION

DIRECTOR, DEPARTMENT OF TRANSPORTATION

CITY OF BALTIMORE
DEPARTMENT OF TRANSPORTATION
CONDUIT DIVISION

ISSUED	REVISED	REVISED
8 / 2010		

DETAILS FOR 6 FT x 12 FT POURED IN PLACE TRANSFORMER MANHOLE

STANDARD NO.
BC 825.06-2

SCALE : NONE

SHEET 2 OF 2

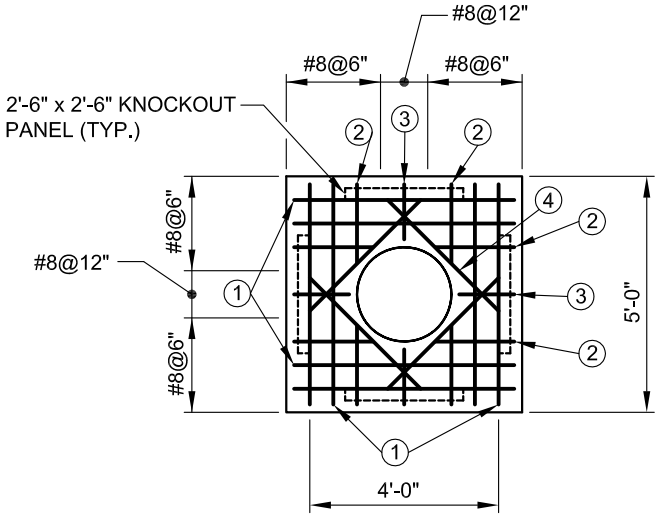

TOP SLAB PLAN

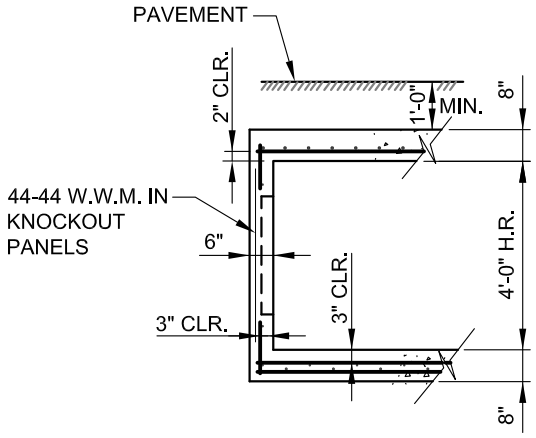

NOTE:
3'-2" x 3'-2" AREA OF
44-44 W.W.M. CENTERED
ON KNOCKOUT PANELS

WALL SECTION

SCHEDULE OF REINFORCING STEEL FOR SHEET NO. 1
SEE SHEET NO. 2 FOR ADDITIONAL REBAR

BAR NO.		1	2	3	4	TOTAL LENGTH		TOTAL WEIGHT
BAR SIZE		#8	#8	#8	#5			
M. H. SIZE	H.R.	4'-8"	1'-8"	1'-2"	3'-4"	#5	#8	
4' x 4'	4'	8	8	4	4	13'-4"	55'-4"	162#

NOTES:
CONCRETE: MIX NO. 3
LOADING: HS25

APPROVED:

CHIEF, CONDUIT DIVISION

DIRECTOR, DEPARTMENT OF TRANSPORTATION

CITY OF BALTIMORE
DEPARTMENT OF TRANSPORTATION
CONDUIT DIVISION

ISSUED	REVISED	REVISED
8 / 2010		

4'-0" x 4'-0" x 4'-0"
MANHOLE - CONDUIT

STANDARD NO.
BC 825.07-1

SCALE : NONE

SHEET 1 OF 3

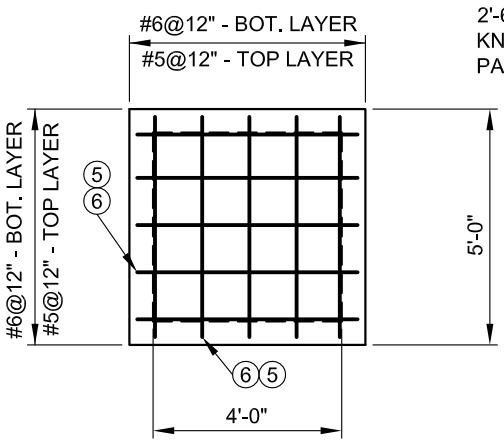

BOTTOM SLAB PLAN

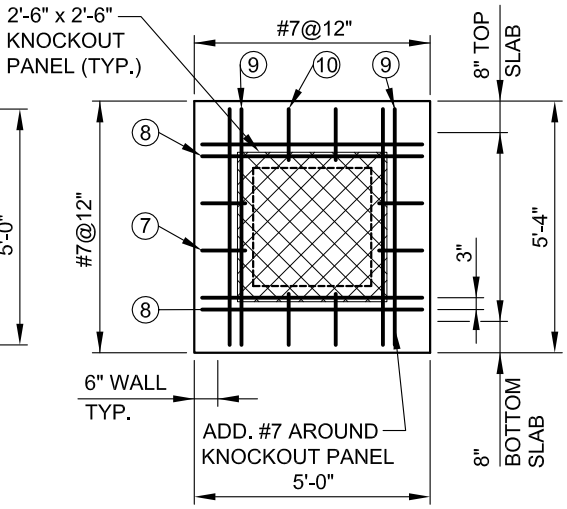

WALL ELEVATION

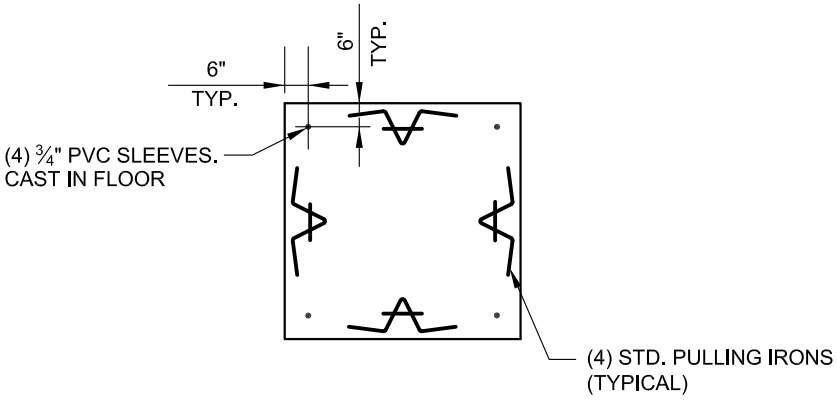

BOTTOM SLAB PLAN

SCHEDULE OF REINFORCING STEEL FOR SHEET NO. 2
SEE SHEET NO. 1 FOR ADDITIONAL REBAR

BAR NO.		5	6	7	8	9	10	TOTAL LENGTH			TOTAL WEIGHT
BAR SIZE		#6	#5	#7	#7	#7	#7				
M. H. SIZE	H.R.	4'-8"	4'-8"	11"	4'-8"	5'-0"	1'-1"	#5	#6	#7	
4' x 4'	4'	10	10	4	4	4	4	46'-8"	46'-8"	46'-8"	214#

NOTES:
CONCRETE: MIX NO. 3
LOADING: HS25

APPROVED:

CHIEF, CONDUIT DIVISION

DIRECTOR, DEPARTMENT OF TRANSPORTATION

CITY OF BALTIMORE
DEPARTMENT OF TRANSPORTATION
CONDUIT DIVISION

ISSUED	REVISED	REVISED
8 / 2010		

4'-0" x 4'-0" x 4'-0"
MANHOLE - CONDUIT

STANDARD NO.
BC 825.07-2

SCALE : NONE

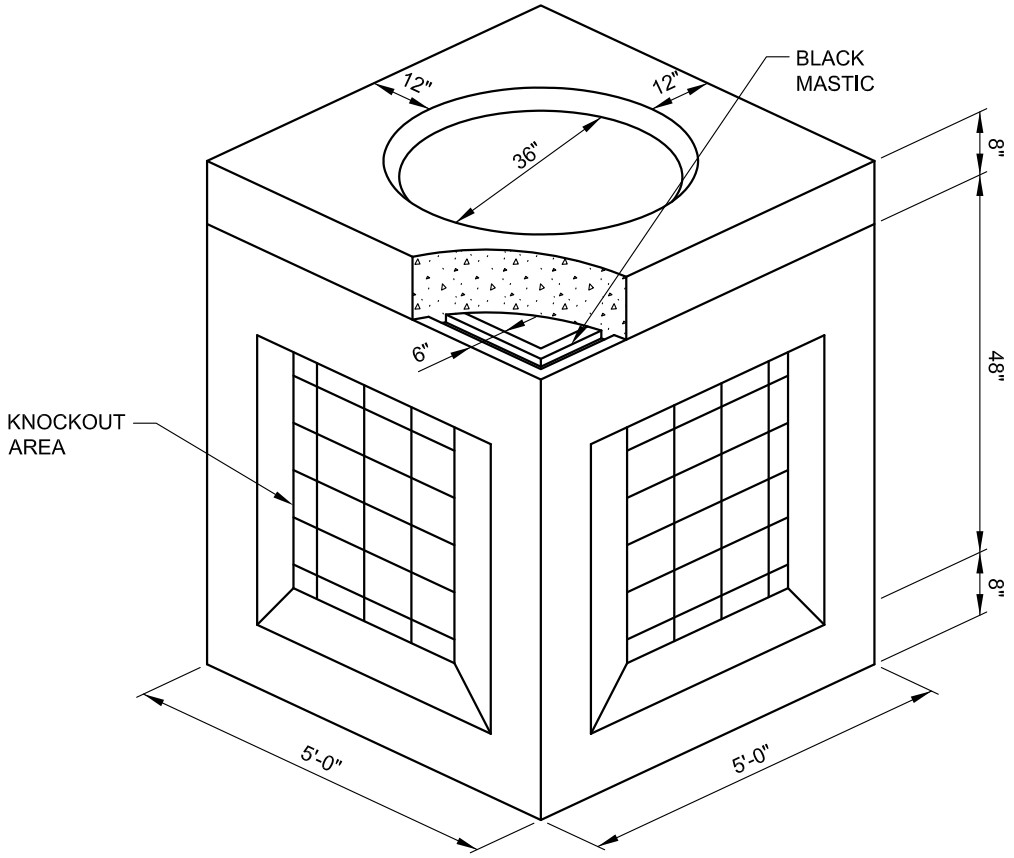

ISOMETRIC VIEW

NOTES:
CONCRETE: MIX NO. 3
LOADING: HS25

APPROVED:

CHIEF, CONDUIT DIVISION

DIRECTOR, DEPARTMENT OF TRANSPORTATION

CITY OF BALTIMORE
DEPARTMENT OF TRANSPORTATION
CONDUIT DIVISION

4'-0" x 4'-0" x 4'-0"
MANHOLE - CONDUIT

ISSUED	REVISED	REVISED
8 / 2010		

STANDARD NO.
BC 825.07-3

SCALE : NONE

SHEET 3 OF 3

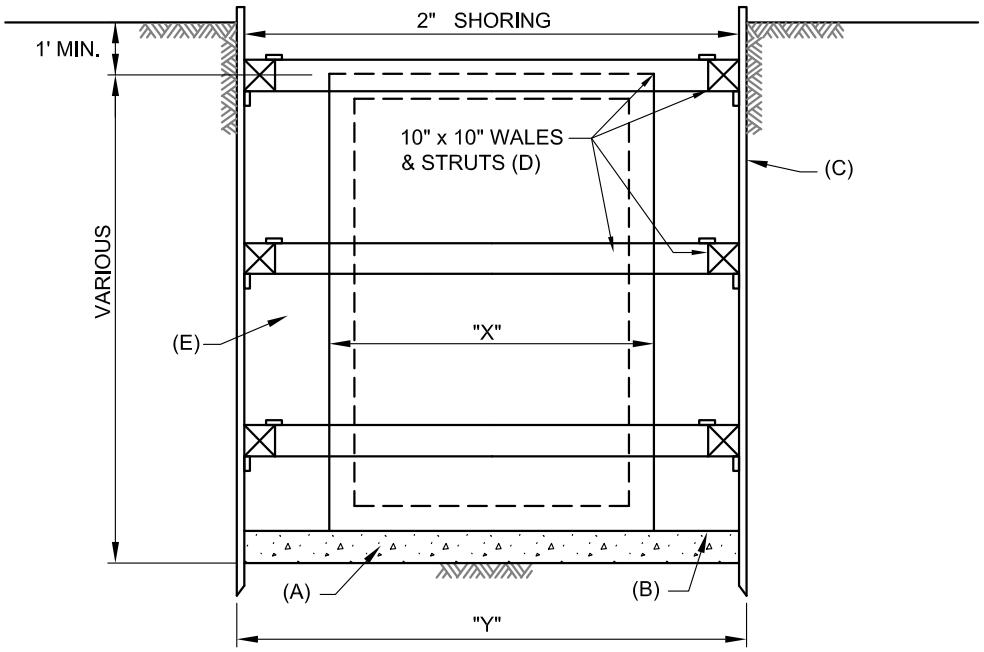

SECTION A-A

NOTES:

A. 8" OF STABILIZER MATERIAL (PEA - GRAVEL)
B. BOTTOM TO BE DRY AND LEVELED TO WITHIN 1" SIDE TO SIDE.
C. 2" SHORING #1 ROUGH PINE, TO BE CARRIED ON ALL FOUR SIDES.
D. PRIOR TO BACKFILLING, REMOVE ALL SHORING WHEN CONDITIONS ALLOW AND PERMIT AUTHORITIES APPROVE.
E. BACKFILL WITH CLEAN DRY WELL COMPACTED MATERIAL. USE BANK RUN SAND AND GRAVEL.

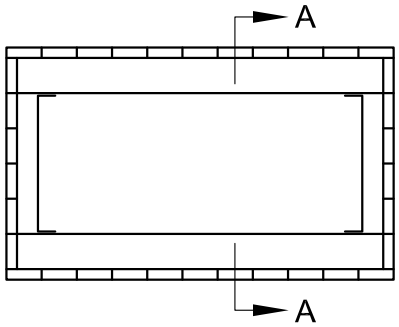

PLAN

STD. M. H. SIZE	EXCAV. SIZE	"V"	"W"	"X"	"Y"	2" SHORING BD. FT. REQ'D	WALERS & STRUTS 10"x10" MIN. SIZE LIN. FT. REQ'D
4' x 4' x 4'	8' x 8'	5.33'	8'	5.33'	8'	384	64'
6' x 8' x 7'	9' x 12'	10'	12'	7'	9'	756	126'
6' x 8' x 8'	10' x 12'	9.33'	12'	7.33'	10'	704	126'
6' x 12' x 7'	10' x 16'	13.33'	16'	7.33'	10'	936	126'
6' x 12' x 8'	10' x 16'	13.33'	16	7.33'	10'	1040	126'
6' x 12' x 9'	10' x 16'	13.33'	16	7.33'	10'	1144	126'
SPECIAL 6' x 17'-6" x 9'	10' x21.5'	18.83'	21.5'	7.33'	10'	1386	126'

APPROVED:

CHIEF, CONDUIT DIVISION

DIRECTOR, DEPARTMENT OF TRANSPORTATION

CITY OF BALTIMORE
DEPARTMENT OF TRANSPORTATION
CONDUIT DIVISION

ISSUED	REVISED	REVISED
8 / 2010		

EXCAVATION & SHORING FOR PRECAST MANHOLES

STANDARD NO.
BC 825.08-1

SCALE : NONE

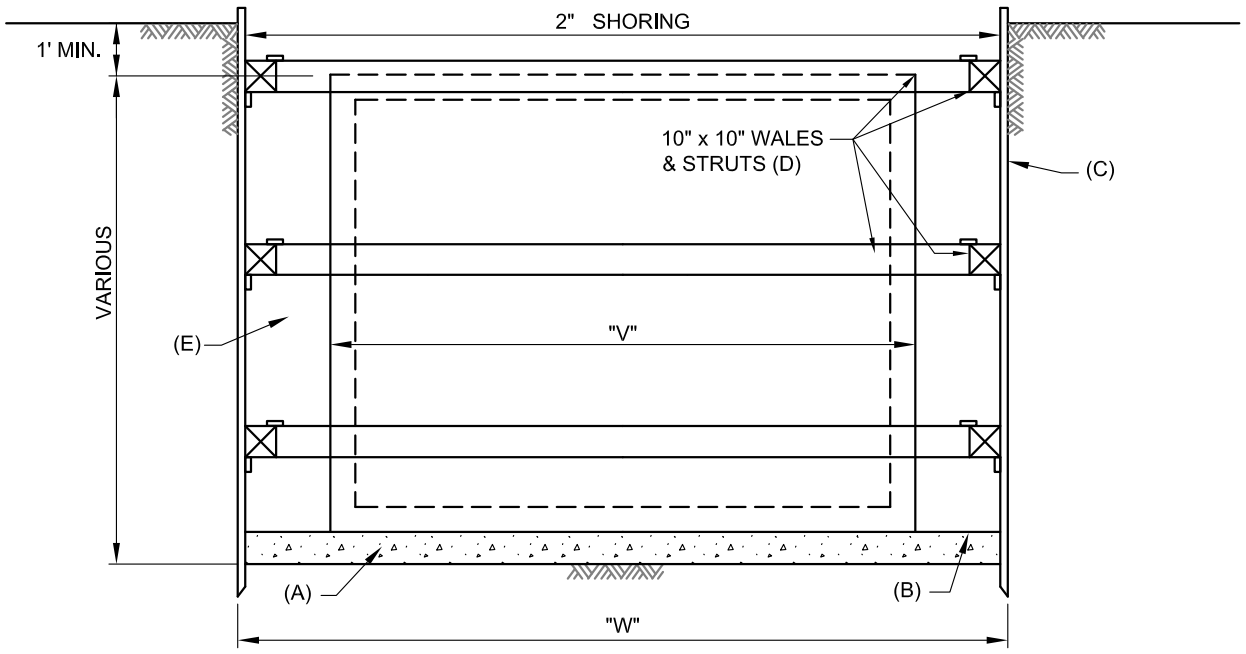

SECTION B-B

NOTES:

A. 8" OF STABILIZER MATERIAL (PEA - GRAVEL)
B. BOTTOM TO BE DRY AND LEVELED TO WITHIN 1" SIDE TO SIDE.
C. 2" SHORING #1 ROUGH PINE, TO BE CARRIED ON ALL FOUR SIDES.
D. PRIOR TO BACKFILLING, REMOVE ALL SHORING WHEN CONDITIONS ALLOW AND PERMIT AUTHORITIES APPROVE.
E. BACKFILL WITH CLEAN DRY WELL COMPACTED MATERIAL. USE BANK RUN SAND AND GRAVEL.

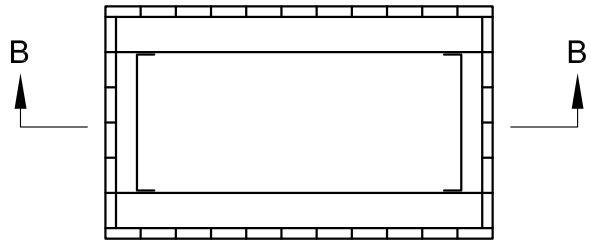

PLAN

SEE SHEET 1 OF 2 FOR DIMENSIONS

APPROVED:

CHIEF, CONDUIT DIVISION

DIRECTOR, DEPARTMENT OF TRANSPORTATION

CITY OF BALTIMORE
DEPARTMENT OF TRANSPORTATION
CONDUIT DIVISION

ISSUED	REVISED	REVISED
8 / 2010		

EXCAVATION & SHORING FOR PRECAST MANHOLES

STANDARD NO.
BC 825.08-2

SCALE : NONE

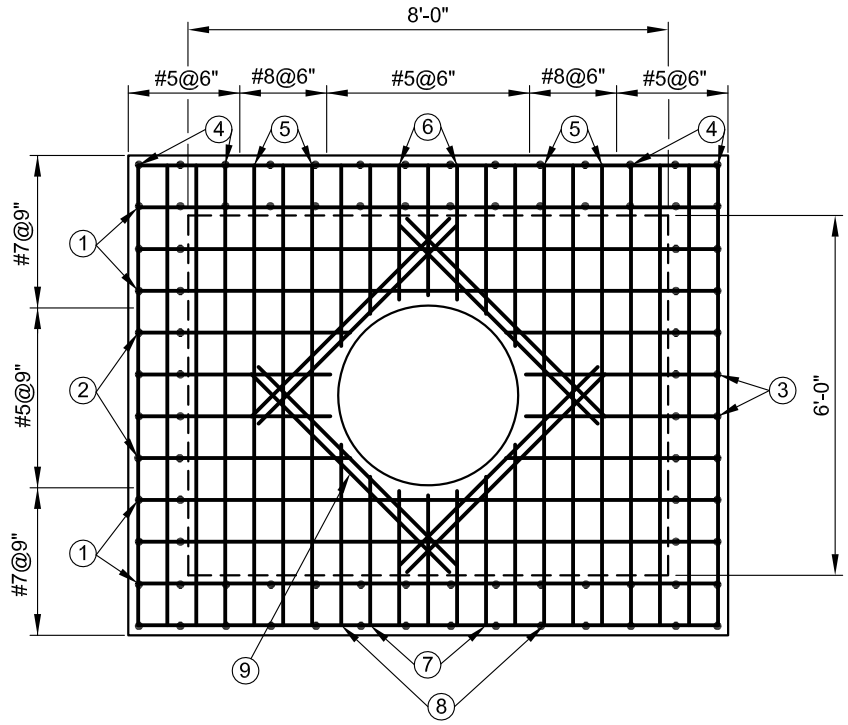

TOP SLAB PLAN

STANDARD TRUNKLINE MANHOLE

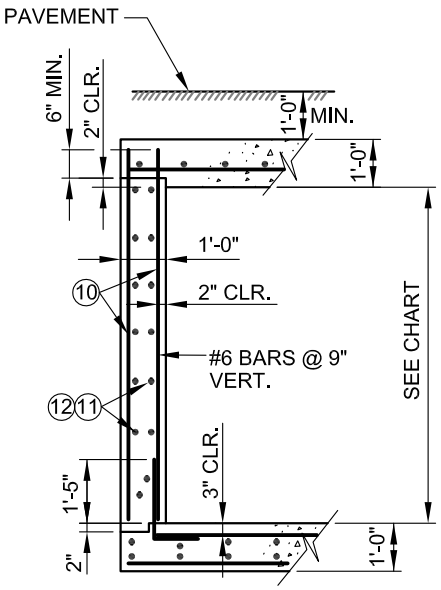

SECTION

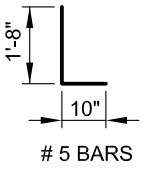

5 BARS

NO. REQ.	TOTAL LENGTH	TOTAL WGT.
26	65'	68 #

SCHEDULE OF REINFORCING STEEL FOR SHEET NO. 1
SEE SHEET NO. 2 FOR ADDITIONAL REBAR

BAR NO.		1	2	3	4	5	6	7	8	9
BAR SIZE		#7	#5	#5	#5	#8	#5	#5	#5	#5
M. H. SIZE	H.R.	9'-8"	3'-6"	3'-2"	7'-8"	7'-8"	2'-2"	2'-5"	3'-0"	4'-8"
6' x 8'	7'	8	4	4	8	6	6	4	4	8
6' x 8'	8'	8	4	4	8	6	6	4	4	8

BAR NO.		10	11	12	TOTAL LENGTH				TOTAL WEIGHT
BAR SIZE		#6	#5	#5					
M. H. SIZE	H.R.	8'-7"	7'-8"	9'-8"	#5	#6	#7	#8	
6' x 8'	7'	88	28	28	645'-4"	755'-4"	77'-4"	46'-0"	2089#
6' x 8'	8'	88	36	36	784'-6"	755'-4"	77'-4"	46'-0"	2234#

NOTES:
CONCRETE: MIX NO. 3
LOADING: HS25

APPROVED:

CHIEF, CONDUIT DIVISION

DIRECTOR, DEPARTMENT OF TRANSPORTATION

CITY OF BALTIMORE
DEPARTMENT OF TRANSPORTATION
CONDUIT DIVISION

ISSUED	REVISED	REVISED
8 / 2010		

POURED IN PLACE
MANHOLE 6' x 8'

STANDARD NO.
BC 825.09-1

SCALE : NONE

SHEET 1 OF 2

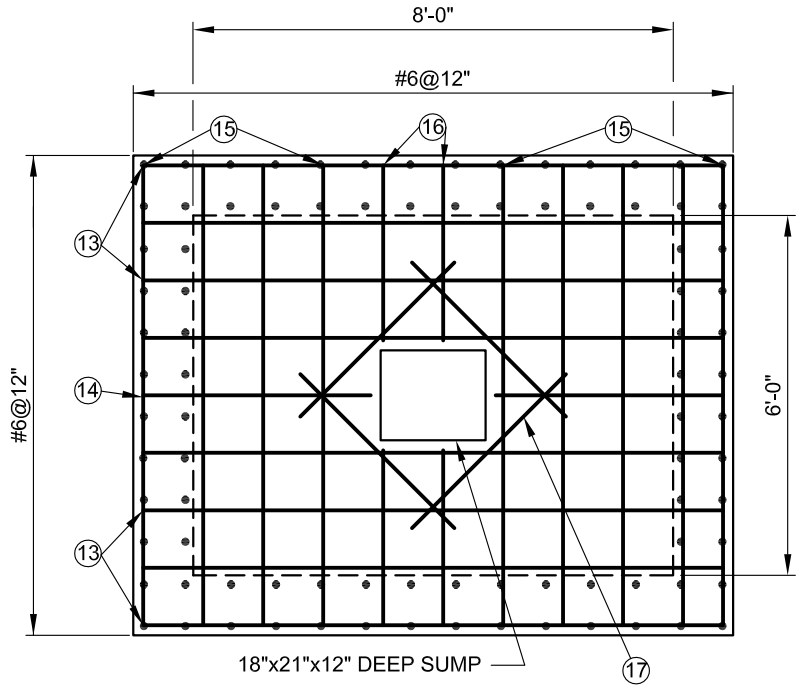

BOTTOM SLAB PLAN
STANDARD TRUNKLINE MANHOLE

SCHEDULE OF REINFORCING STEEL FOR SHEET NO. 2
SEE SHEET NO. 1 FOR ADDITIONAL REBAR

BAR NO.		13	14	15	16	17	TOTAL LENGTH		TOTAL WEIGHT
BAR SIZE		#6	#6	#6	#6	#5			
M. H. SIZE	H.R.	9'-8"	3'-9"	7'-8"	2'-11"	3'-8"	#5	#6	
6' x 8'	7'	8	2	9	4	4	14'-8"	165'-6"	264 #
6' x 8'	8'	8	2	9	4	4	14'-8"	165'-6"	264 #

NOTES:
CONCRETE: MIX NO. 3
LOADING: HS25

APPROVED:

CHIEF, CONDUIT DIVISION

DIRECTOR, DEPARTMENT OF TRANSPORTATION

CITY OF BALTIMORE
DEPARTMENT OF TRANSPORTATION
CONDUIT DIVISION

POURED IN PLACE
MANHOLE 6' x 8'

ISSUED	REVISED	REVISED
8 / 2010		

STANDARD NO.
BC 825.09-2

SCALE : NONE

SHEET 2 OF 2

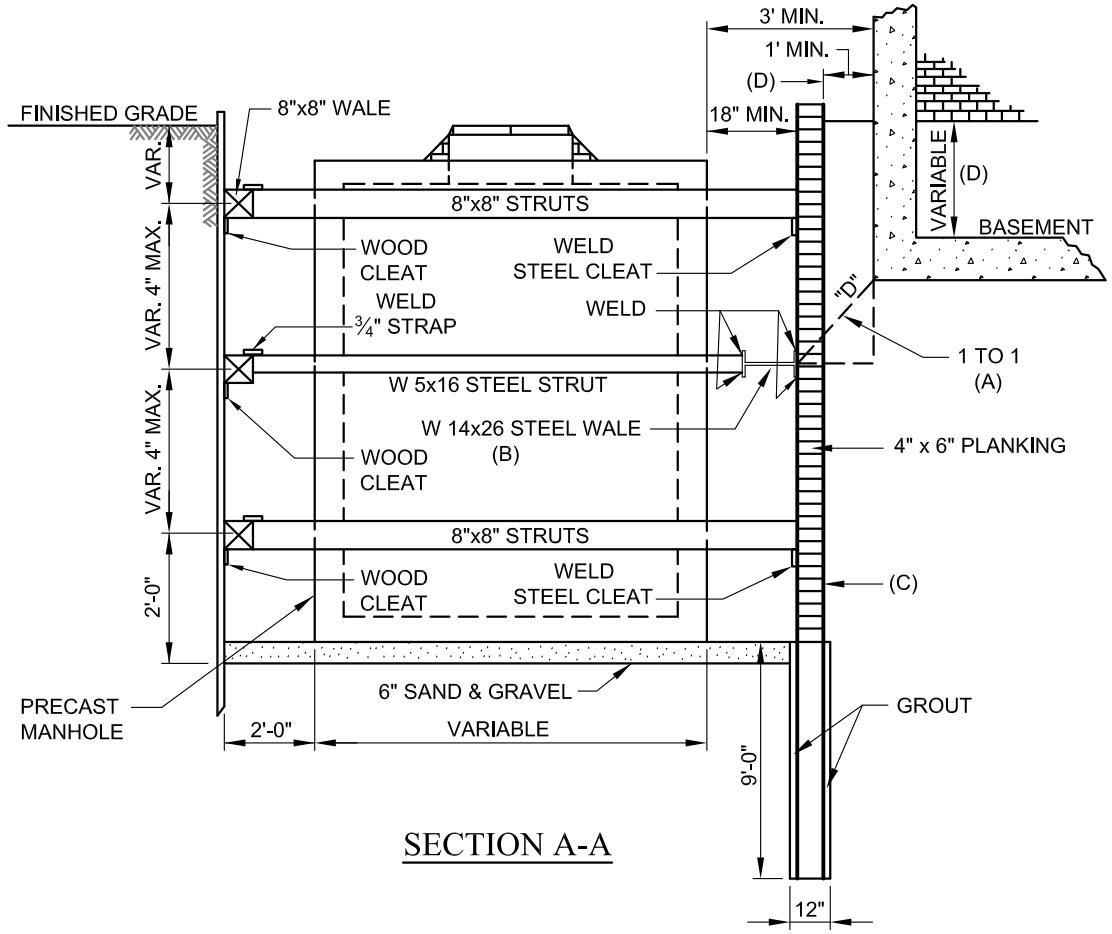

SECTION A-A

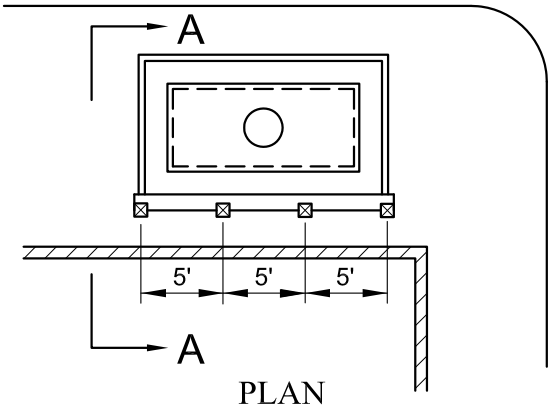

PLAN

NOTES:

A. SOLDIER PILE BRACING IS REQUIRED ONLY WHERE UNDERMINING A BUILDING IS A CONSIDERATION. THIS POSSIBILITY EXISTS WHENEVER A 1' TO 1' SLOPE BEGINNING AT THE BUILDING FOUNDATION FLOOR OR FOOTING FALLS ABOVE THE BOTTOM OF THE PROPOSED EXCAVATION AS SHOWN BY LINE "D".
B. PLACE W 14x26 STEEL WALE AT INTERSECTION OF 1' TO 1' SLOPE WITH EXCAVATION.
C. W 6X8.5 BEAMS PLACED IN A 12" AUGURED HOLE AND GROUTED.
D. THE CONSTRUCTION DRAWING PREPARED FOR A SPECIFIC INSTALLATION SHALL CLEARLY INDICATE THE EXCAVATION DISTANCE FROM NEAREST ADJACENT BUILDING AND DEPTH OF THIS BUILDINGS BASEMENT OR FOOTING.
E. ALL SHORING AND BRACING TO REMAIN IN PLACE.
F. BACKFILL WITH SPECIAL BANK RUN SAND AND GRAVEL, COMPACT IN LAYERS SPECIFIED BY LOCAL GOVERNMENTAL SUB DIVISION.

APPROVED:

CHIEF, CONDUIT DIVISION

DIRECTOR, DEPARTMENT OF TRANSPORTATION

CITY OF BALTIMORE
DEPARTMENT OF TRANSPORTATION
CONDUIT DIVISION

ISSUED	REVISED	REVISED
8 / 2010		

SOLDIER PILE BRACING FOR PRECAST MANHOLE

STANDARD NO.
BC 825.10

SCALE : NONE

SHEET 1 OF 1

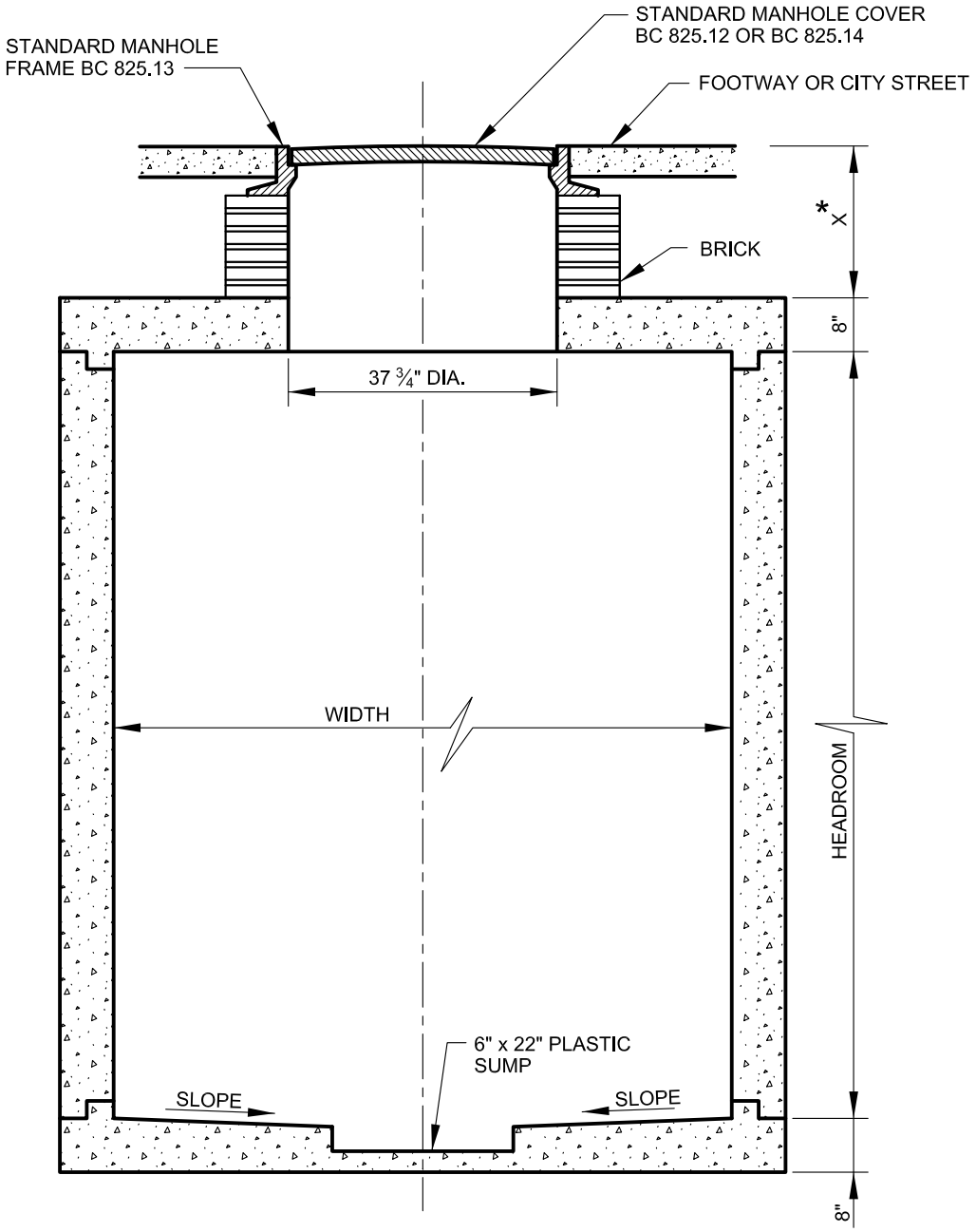

TYPICAL SECTION

NOTE:
FOR STEEL AND OTHER DETAILS, SEE BC 825.01 AND BC 825.10

* THE "X" DIMENSION SHALL BE 30" WHEN THE MANHOLE HEADROOM IS LESS THAN NINE (9.0') FEET. WHEN THE HEADROOM IS NINE (9.0') FEET OR MORE, THE "X" DIMENSION SHALL BE 24".
SEE BC 825.01 NOTE "C" FOR PULLING IRON REQUIREMENTS.

CHIMNEY: BRICK
LOADING: HS25

APPROVED:

CHIEF, CONDUIT DIVISION

DIRECTOR, DEPARTMENT OF TRANSPORTATION

CITY OF BALTIMORE
DEPARTMENT OF TRANSPORTATION
CONDUIT DIVISION

ISSUED	REVISED	REVISED
8 / 2010		

MANHOLE - CONDUIT
STANDARD INSTALLATION

STANDARD NO.
BC 825.11

SCALE : NONE

SHEET 1 OF 1

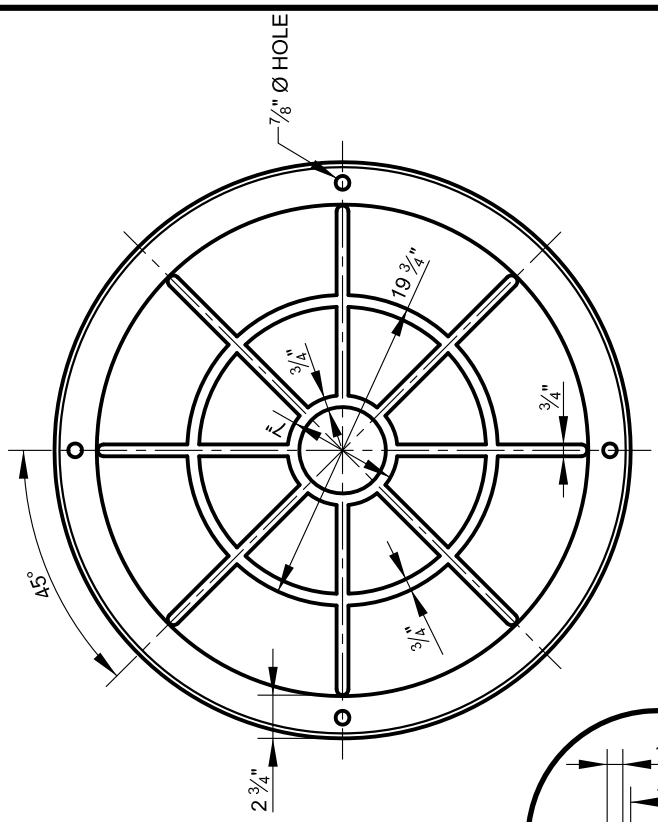

BOTTOM OF COVER A-1

NOTE:
FOR TRANSIT AND TRAFFIC MANHOLE COVERS CHANGE THE LETTERS DPW TO DTT

NOTE:
AVERAGE WEIGHT OF MANHOLE COVER - APPROX. 323 LBS.

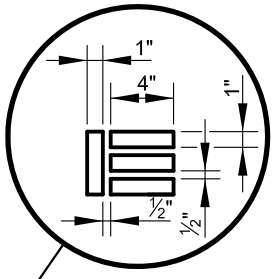

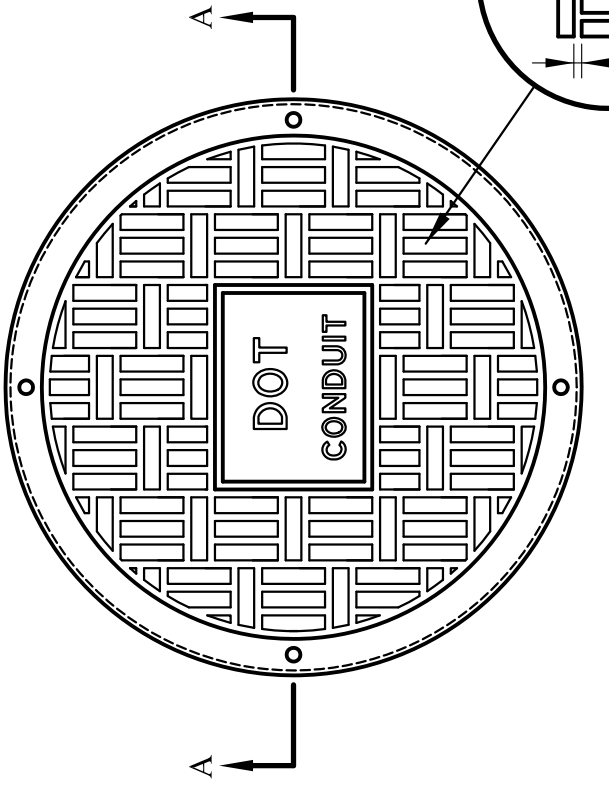

TOP OF COVER A-1

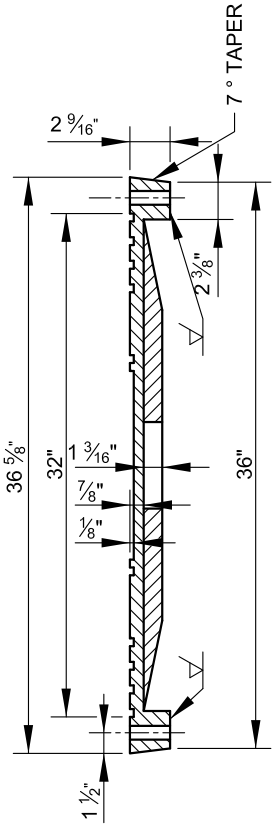

SECTION A-A

GRAY IRON A48-No. 30B

APPROVED:

CHIEF, CONDUIT DIVISION

DIRECTOR, DEPARTMENT OF TRANSPORTATION

CITY OF BALTIMORE
DEPARTMENT OF TRANSPORTATION
CONDUIT DIVISION

ISSUED	REVISED	REVISED
8 / 2010		

MANHOLE - CONDUIT STANDARD COVER

STANDARD NO.
BC 825.12

SCALE : NONE

SHEET 1 OF 1

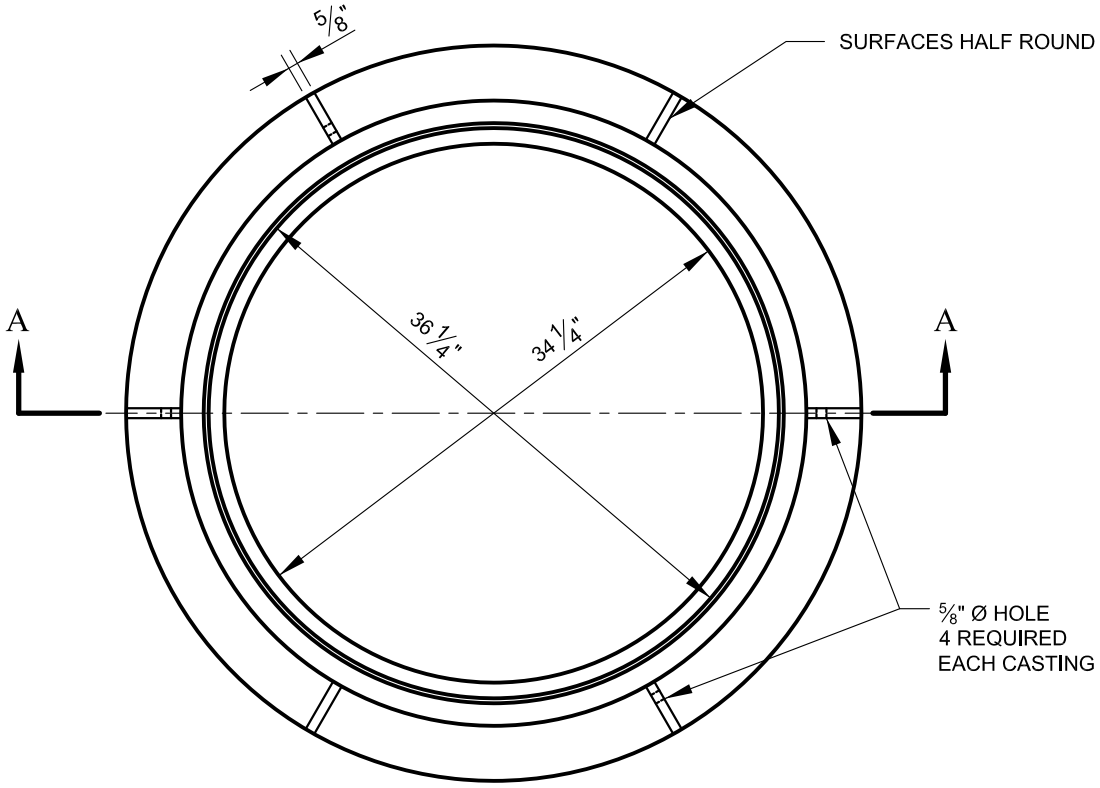

PLAN OF CASTING A-2

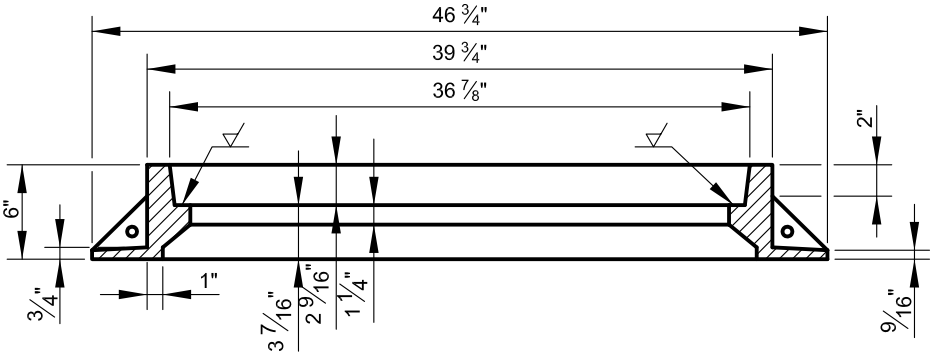

SECTION A-A

AVERAGE WEIGHT OF CASTING A-2 - 350 LBS.

APPROVED:

CHIEF, CONDUIT DIVISION

DIRECTOR, DEPARTMENT OF TRANSPORTATION

CITY OF BALTIMORE
DEPARTMENT OF TRANSPORTATION
CONDUIT DIVISION

ISSUED	REVISED	REVISED
8 / 2010		

MANHOLE - CONDUIT
STANDARD FRAME

STANDARD NO.
BC 825.13

SCALE : NONE

SHEET 1 OF 1

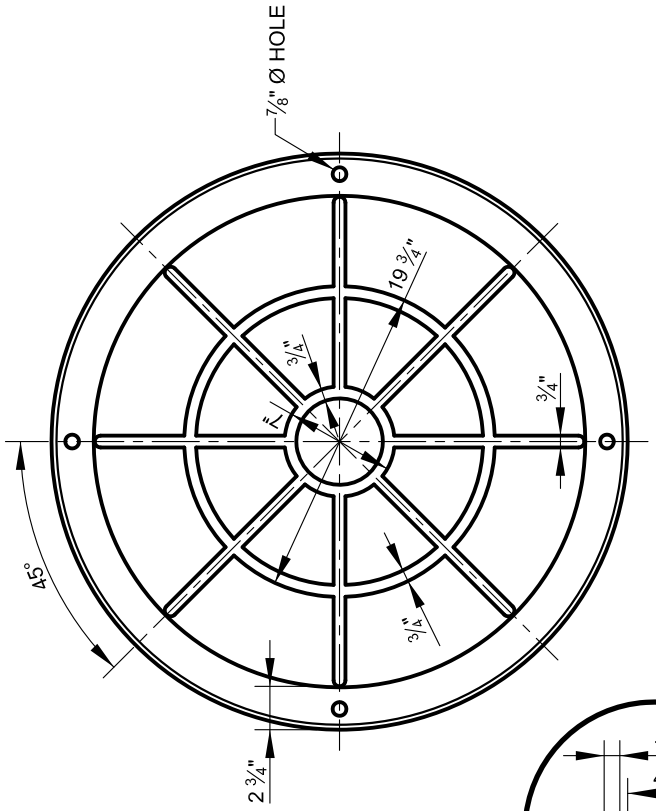

BOTTOM OF COVER A-1

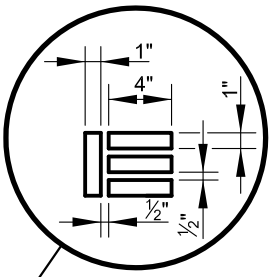

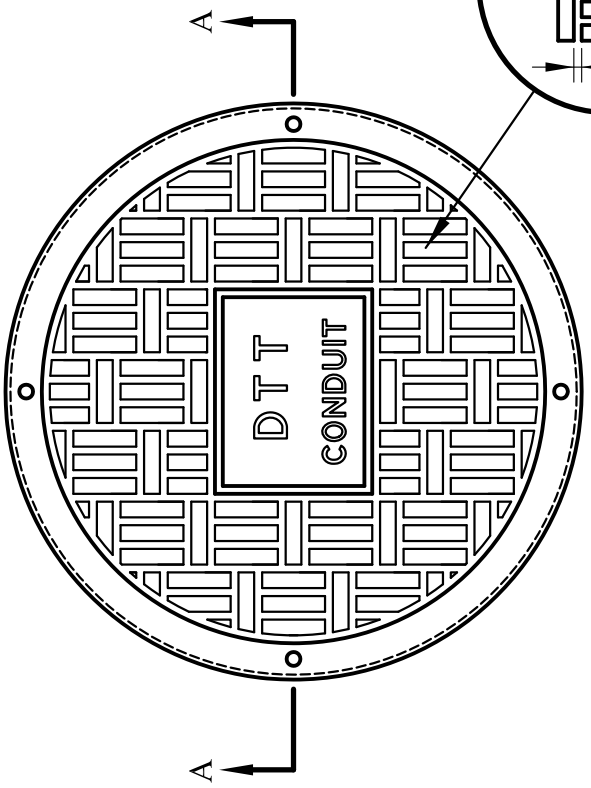

TOP OF COVER A-1

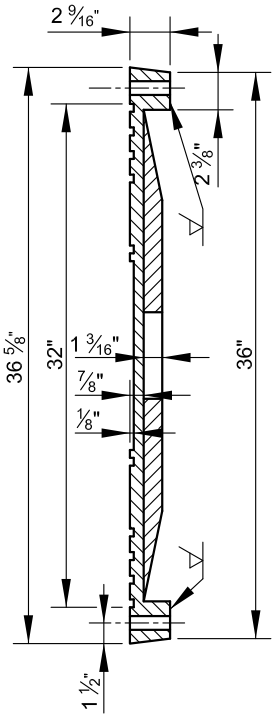

SECTION A-A

STANDARD MANHOLE FRAME
SEE BC 825.13

NOTE:
AVERAGE WEIGHT OF MANHOLE COVER - APPROX. 323 LBS.

APPROVED:

DIVISION CHIEF, TRANSPORTATION ENGINEERING AND CONSTRUCTION

DIRECTOR, DEPARTMENT OF TRANSPORTATION

CITY OF BALTIMORE
DEPARTMENT OF TRANSPORTATION
TRANSPORTATION ENGINEERING AND CONSTRUCTION

MANHOLE - CONDUIT STANDARD COVER - DTT

ISSUED	REVISED	REVISED
8 / 2010		

STANDARD NO.
BC 825.14

SCALE : NONE

SHEET 1 OF 1

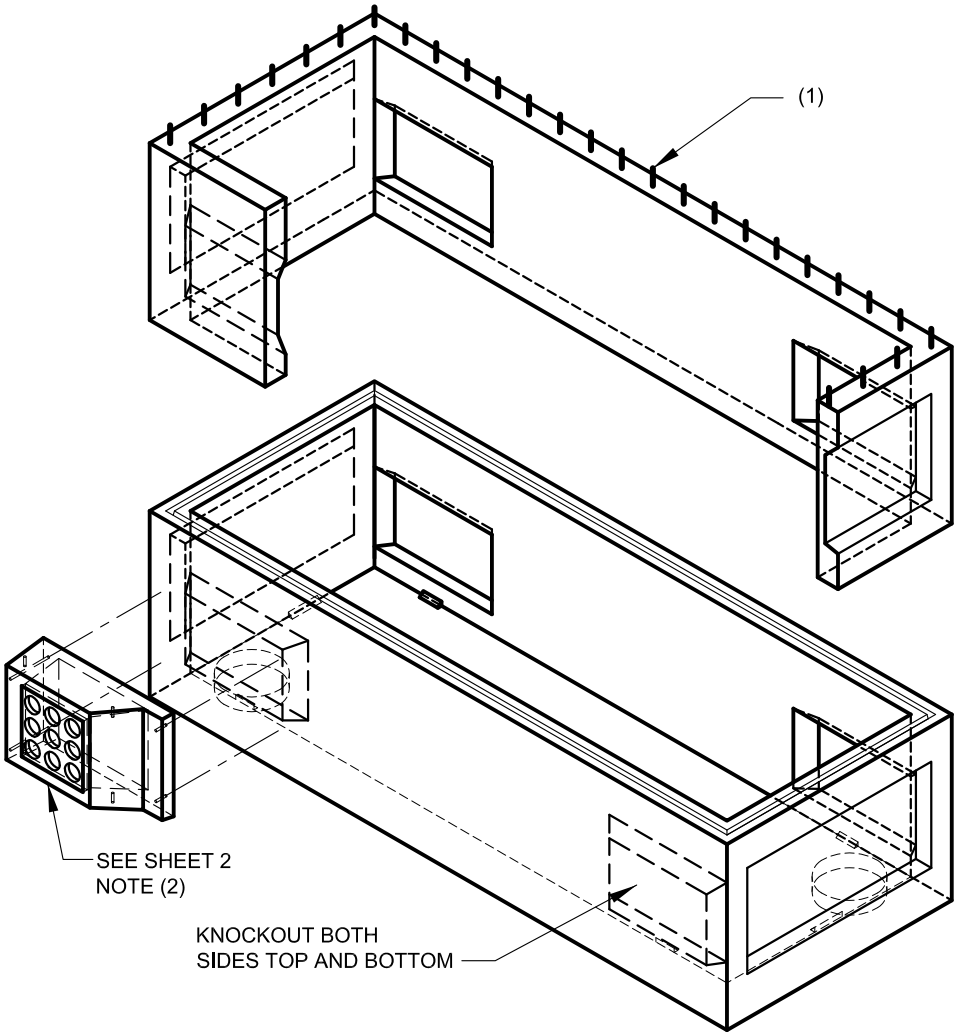

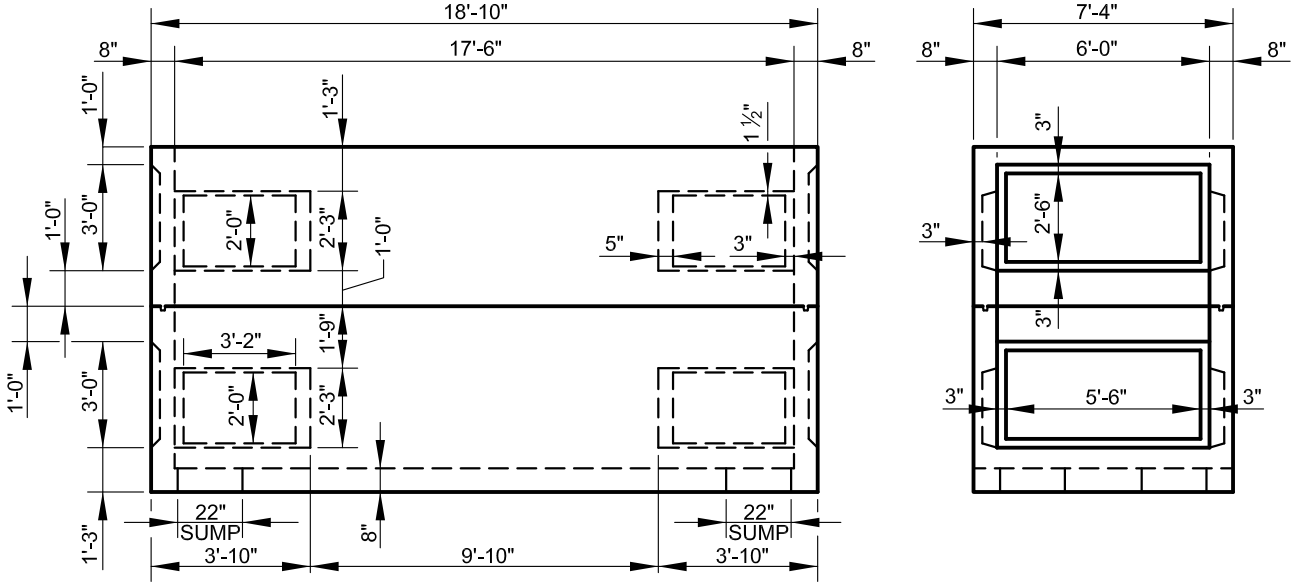

NOTE:

LOADING: HS25 TRUCK LOADING

(1) #4 REINFORCING BARS 12" LONG EMBEDED 6" DEEP SPACED 12" ON CENTERS

APPROVED:

CHIEF, CONDUIT DIVISION

DIRECTOR, DEPARTMENT OF TRANSPORTATION

CITY OF BALTIMORE
DEPARTMENT OF TRANSPORTATION
CONDUIT DIVISION

6' x 17'-6" X 9' PRECAST NETWORK TRANSFORMER MANHOLE - DETAILS

ISSUED	REVISED	REVISED
8 / 2010		

STANDARD NO.
BC 825.15-1

SCALE : NONE

SHEET 1 OF 5

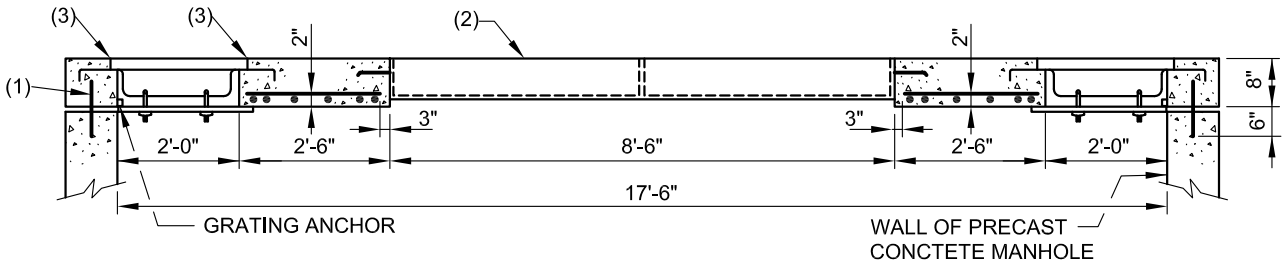

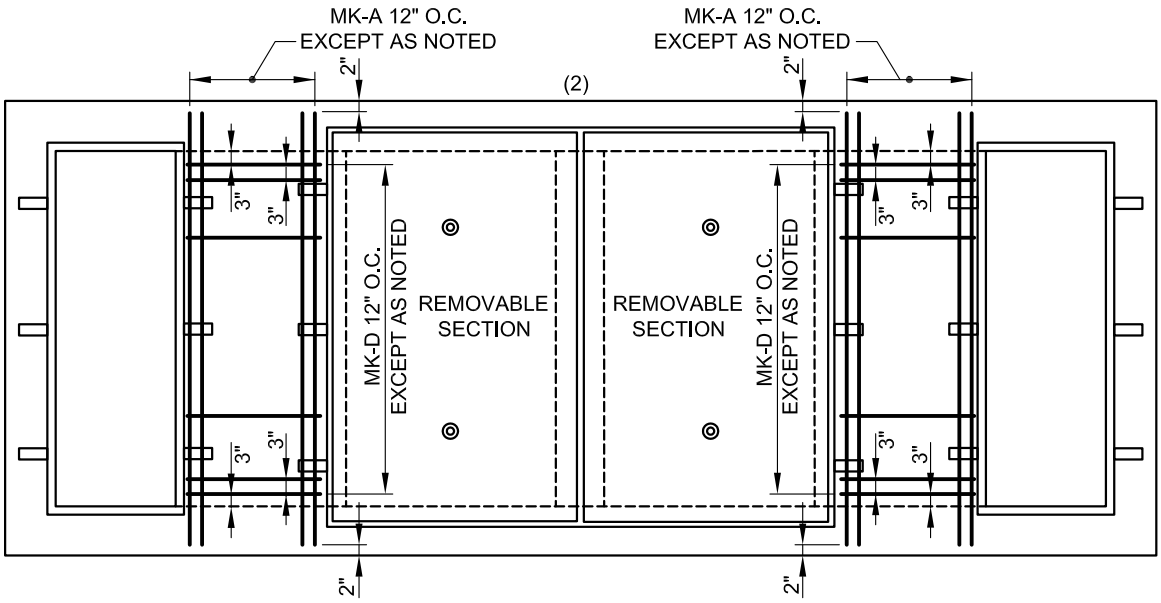

STEEL SCHEDULE

MARK	SIZE	LENGTH	QUANTITY
A	8	7'-0"	12
B	7	4'-1 1/4"	16
C	8	5'-8"	14
D	7	2'-0"	22

NOTE:

(1) 12" LONG DOWELS SPACED 12" ON CENTER EXTENDING 6" ABOVE TOP OF WALL.

(2) POUR REMOVABLE SECTION WITH REMOVABLE FRAMES INSTALLED IN STATIONARY FRAME.

(3) DO NOT SCORE ROOF, REMOVABLE SECTION OR AROUND FRAMES.

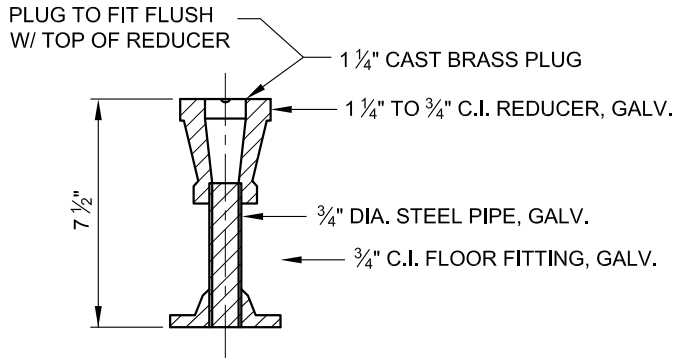

LIFTING INSERT ASSEMBLY

FOR REMOVABLE SECTIONS

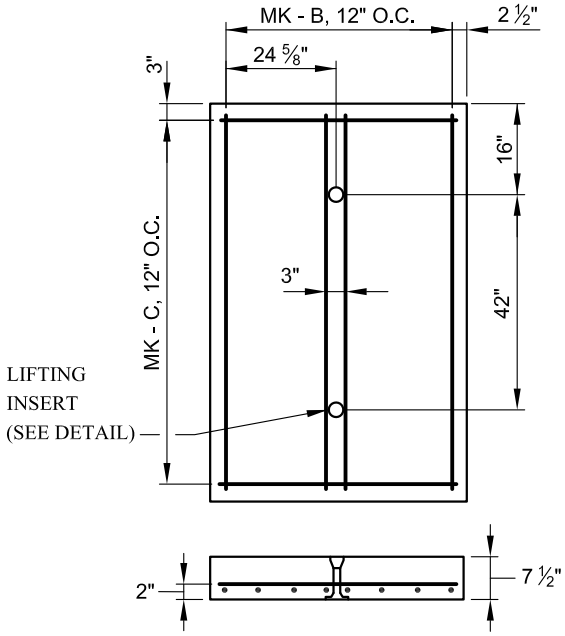

REINFORCED CONCRETE
PORTION OF REMOVABLE SECTIONS
3000 LBS

APPROVED:

CHIEF, CONDUIT DIVISION

DIRECTOR, DEPARTMENT OF TRANSPORTATION

CITY OF BALTIMORE
DEPARTMENT OF TRANSPORTATION
CONDUIT DIVISION

ISSUED	REVISED	REVISED
8 / 2010		

6' x 17' - 6" x 9' PRECAST NETWORK TRANSFORMER MANHOLE - DETAILS

STANDARD NO.
BC 825.15-2

SCALE : NONE

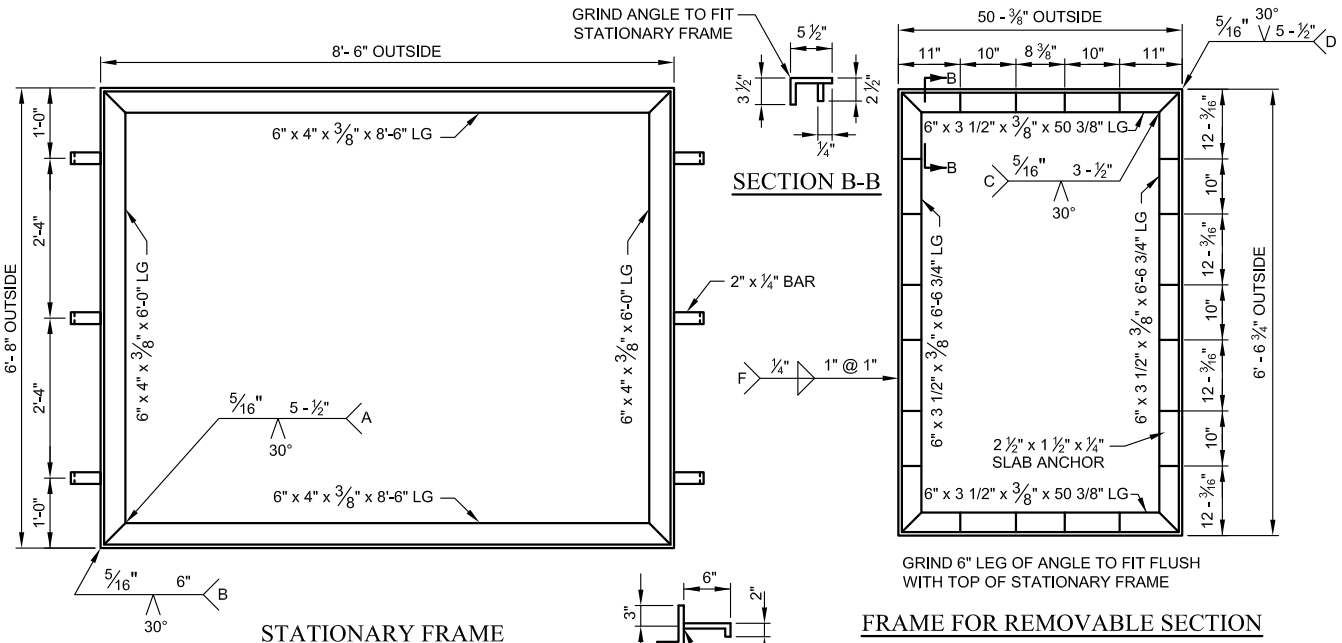

A) 5/16" SINGLE - VEE OUTSIDE OF ANGLE 5 1/2" LG
B) 5/16" SINGLE - VEE OUTSIDE OF ANGLE 6" LG
C) 5/16" SINGLE - VEE INSIDE OF ANGLE 5 1/2" LG
D) 5/16" SINGLE - VEE INSIDE OF ANGLE 3 1/2" LG
E) 1/4" FILLET ALL AROUND
F) 1/4" FILLET 1" LG, 1" O.C. BOTH SIDES

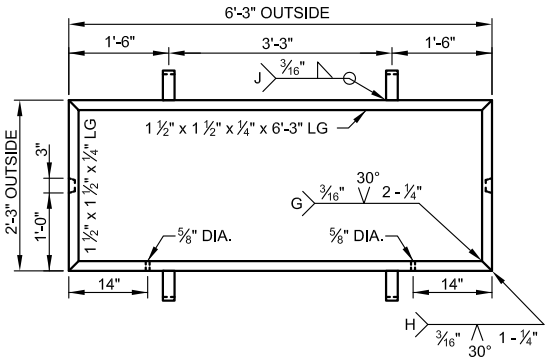

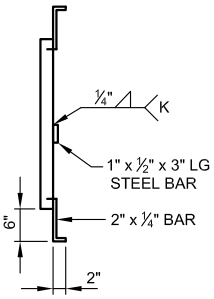

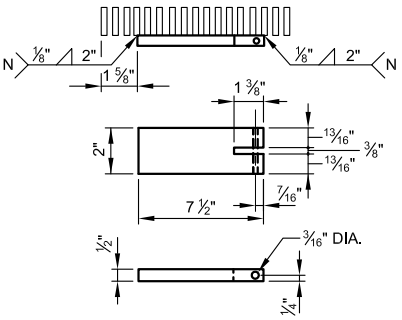

DETAIL 'A' LOCK MOUNT

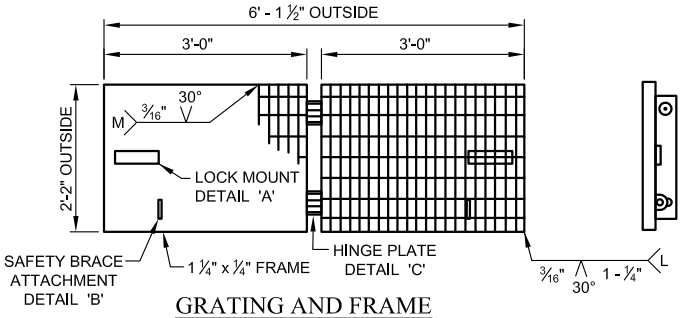

GRATING AND FRAME

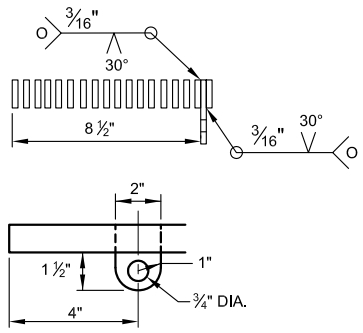

DETAIL 'B'
SAFTEY BRACE ATTACHMENT

G) 3/16" SINGLE - VEE OUTSIDE OF ANGLE 2 1/4" LONG
H) 3/16" SINGLE - VEE OUTSIDE OF ANGLE 1 1/2" LONG
J) 3/16" FILLED ALL AROUND
K) 1/4" FILLET ALL AROUND
L) 3/16" SINGLE - VEE 1 1/4" LONG
M) 3/16" SINGLE - VEE, WELD 1 GRATING MENBER TO FRAME EVERY 6"
N) 1/8" SINGLE - VEE 2" LONG
O) 3/16" SINGLE - VEE ALL AROUND

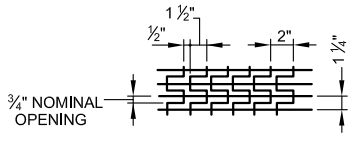

GRATING DESIGN

NOTES:

1. MATERIAL TO BE HOT DIP GALVANIZED AFTER FABRICATION AS PER ASTM SPEC. A - 123.
2. ANY DEVIATION OF GRATING DESIGN MUST BE APPROVED.

APPROVED:

CHIEF, CONDUIT DIVISION

DIRECTOR, DEPARTMENT OF TRANSPORTATION

CITY OF BALTIMORE
DEPARTMENT OF TRANSPORTATION
CONDUIT DIVISION

6' x 17' - 6" x 9' PRECAST NETWORK TRANSFORMER MANHOLE - DETAILS

ISSUED	REVISED	REVISED
8 / 2010		
	10-9-86	

STANDARD NO.
BC 825.15-3

SCALE : NONE

SHEET 3 OF 5

NOTES: 1. ALL STEEL TO BE HOT GALVANIZED AFTER FABRICATION AS PER ASTM SPEC A 123.
2. HINGES ARE SUPPLIED AND INSTALLED BY OTHERS.

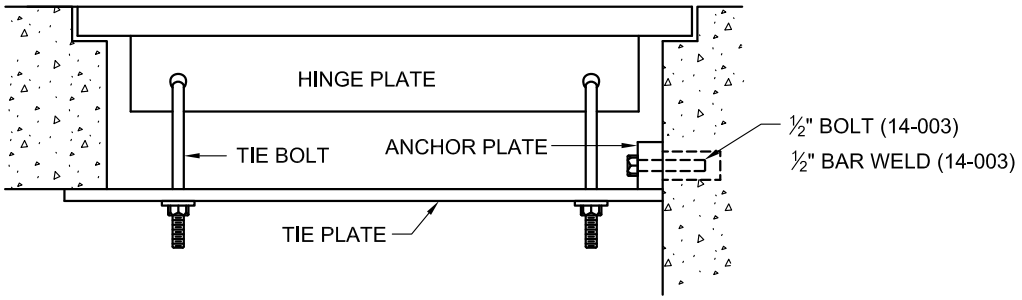

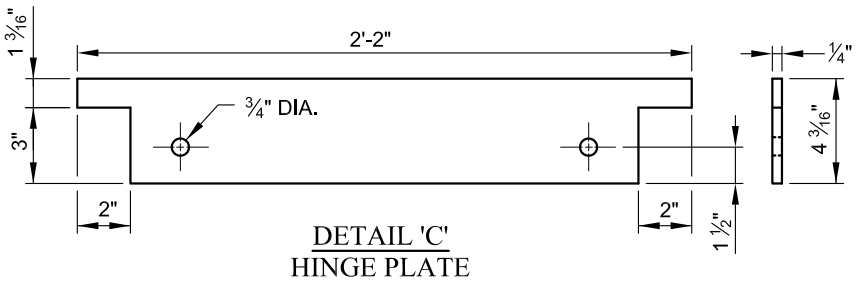

DETAIL 'C'
HINGE PLATE

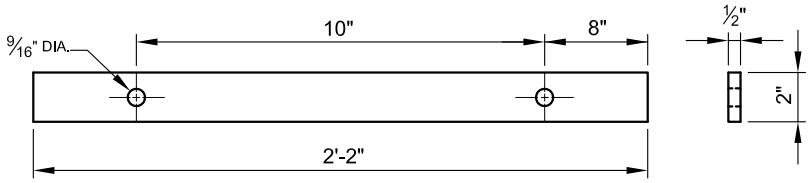

TIE PLATE

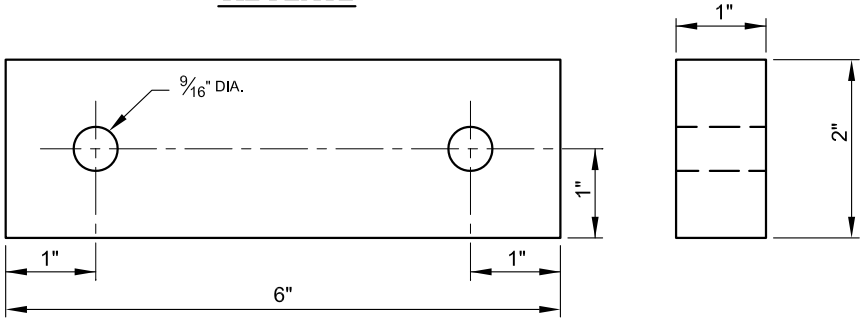

ANCHOR PLATE

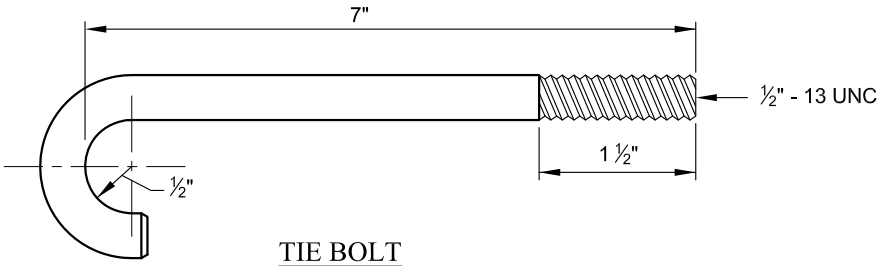

TIE BOLT

APPROVED:

CHIEF, CONDUIT DIVISION

DIRECTOR, DEPARTMENT OF TRANSPORTATION

CITY OF BALTIMORE
DEPARTMENT OF TRANSPORTATION
CONDUIT DIVISION

ISSUED	REVISED	REVISED
8 / 2010		

6' x 17'- 6" x 9' PRECAST NETWORK TRANSFORMER MANHOLE - DETAILS

STANDARD NO.
BC 825.15-4

SCALE : NONE

SHEET 4 OF 5

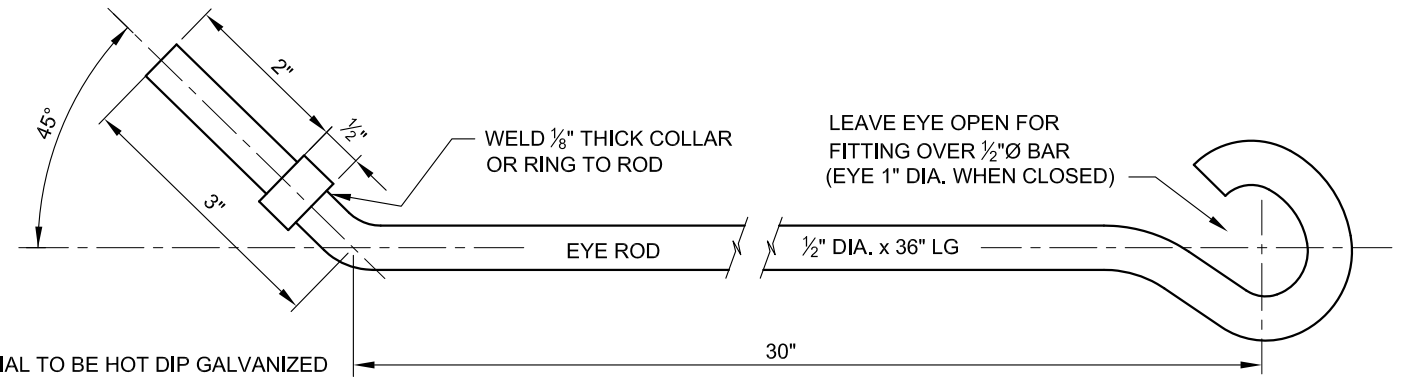

NOTES:

1. MATERIAL TO BE HOT DIP GALVANIZED AFTER FABRICATION AS PER ASTM SPEC. A 123.
2. LATCH SUPPLIED AND INSTALLED BY OTHERS.

GRATING ENTRANCE SUPPORT ROD

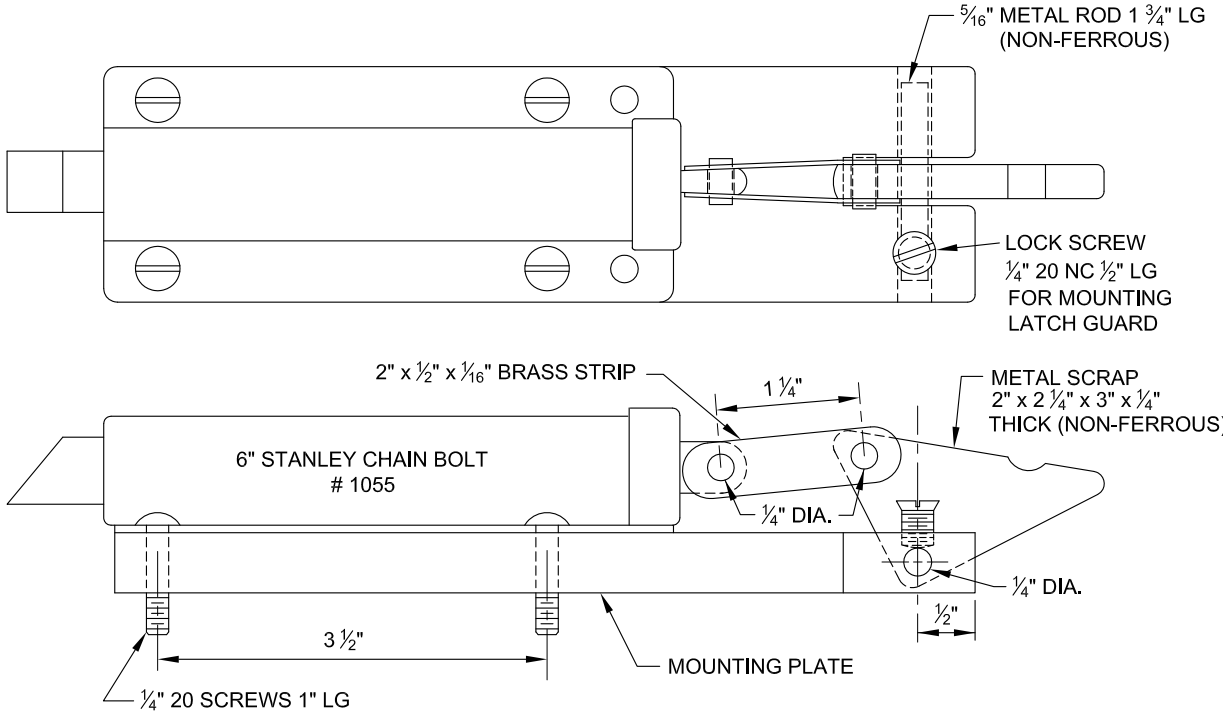

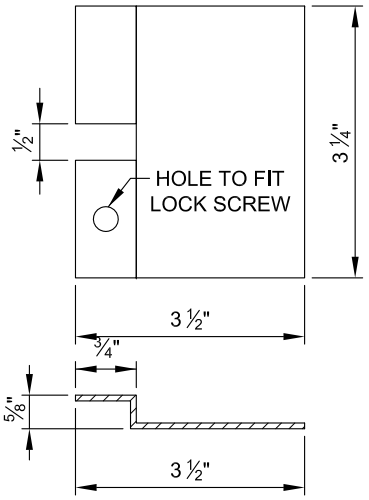

DETAIL OF LATCH GUARD
#6 GA. GALV. SHEET METAL

DETAILS OF GRATING ENTRANCE LATCH

APPROVED:

CHIEF, CONDUIT DIVISION

DIRECTOR, DEPARTMENT OF TRANSPORTATION

CITY OF BALTIMORE
DEPARTMENT OF TRANSPORTATION
CONDUIT DIVISION

6' x 17'- 6" x 9' PRECAST NETWORK TRANSFORMER MANHOLE - DETAILS

STANDARD NO.
BC 825.15-5

ISSUED	REVISED	REVISED
8 / 2010		

SCALE : NONE

SHEET 5 OF 5

NOTE: ALTERNATE DESIGNS ON HS-20-44 LOADING WITH 1' TO 3' COVER WILL BE ACCEPTABLE

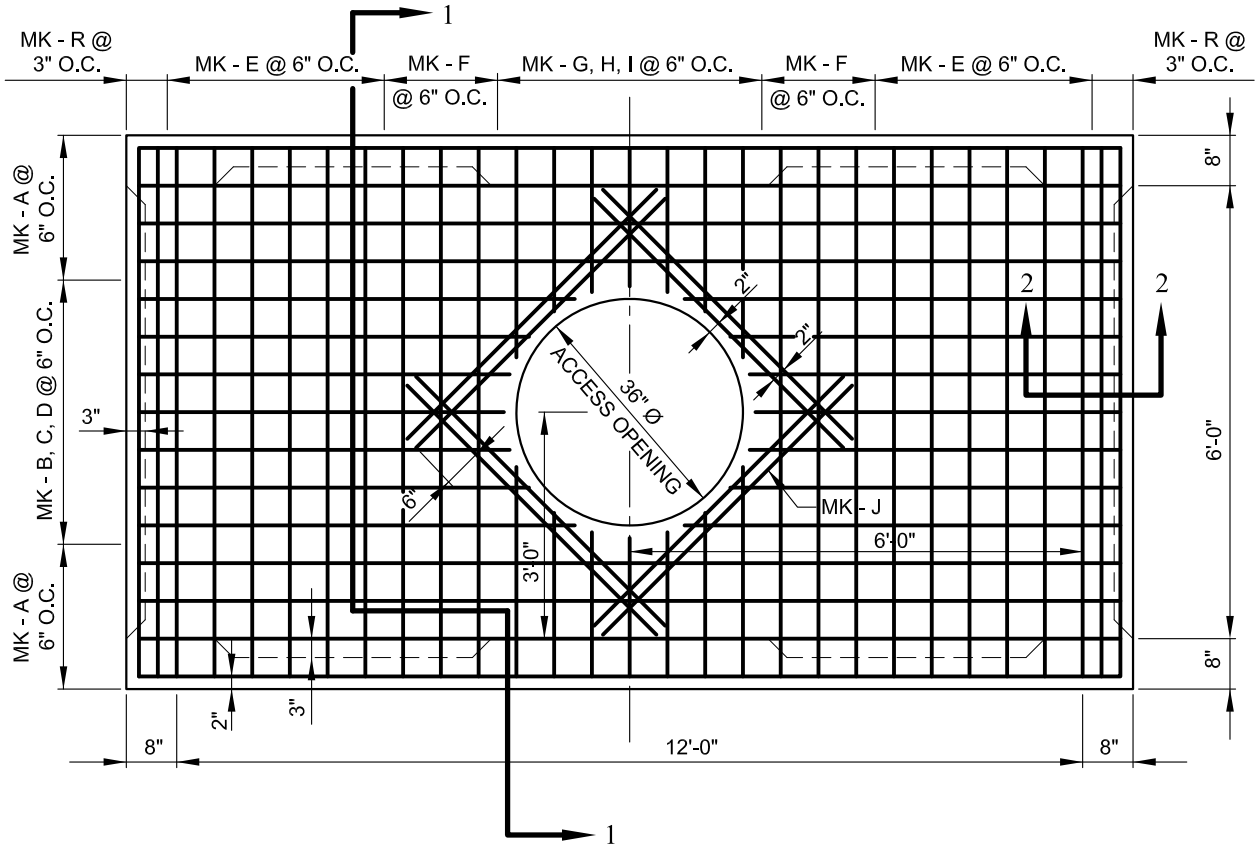

PLAN - TOP HALF

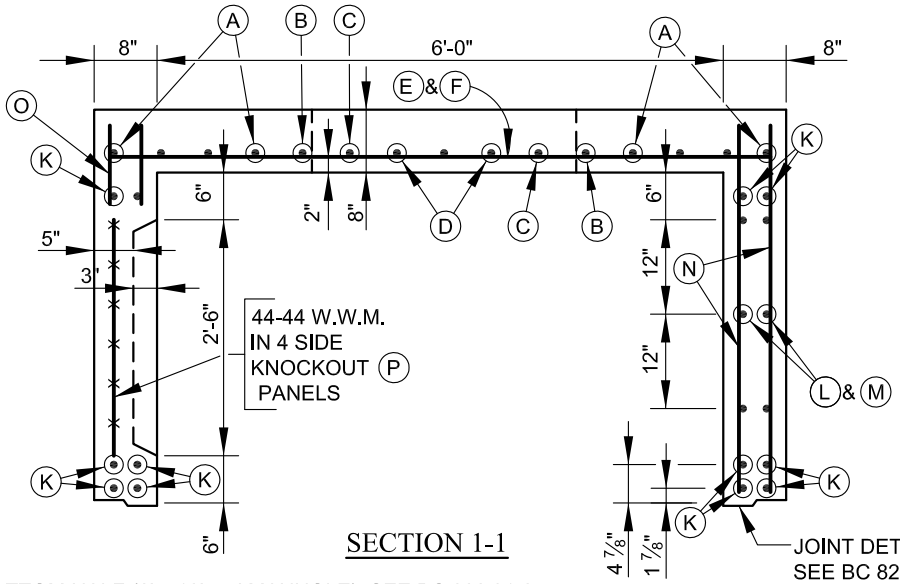

SECTION 1-1

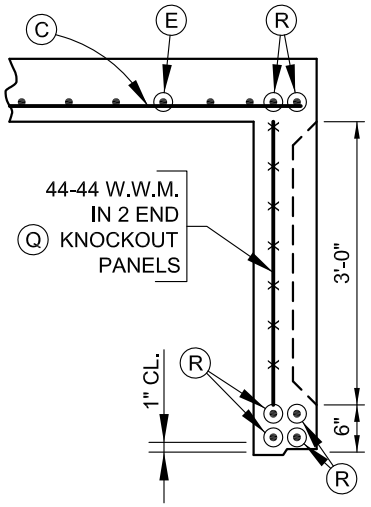

SECTION 2-2

BOTTOM HALF (6' x 12' x 7' MANHOLE) SEE BC 826.01-2
BAR SCHEDULE (6' x 12' x 7' MANHOLE) SEE BC 826.04
KNOCKOUT DETAILS SEE BC 826.05
INSERTS FOR RECESSED EXTENSION SEE BC 826.06
ACCESSORIES FOR PRECAST MANHOLES SEE BC 826.08
STANDARD ACCESS STACK SEE BC 825.11
PRECAST RECESSED EXTENSION SEE BC 826.07-1

GENERAL NOTES

SPECIFICATIONS --------- LATEST DEPARTMENT OF GENERAL SERVICES
CONCRETE ---------- f 'c = 5,000 PSI - MIX AS APPROVED BY ENGR.
REINFORCING ---------- ASTM A615, GRADE 60
WELDED WIRE MESH --- ASTM A185
LOADING ---------- HS 25 TRUCK LOADING

APPROVED:

CHIEF, CONDUIT DIVISION

DIRECTOR, DEPARTMENT OF TRANSPORTATION

CITY OF BALTIMORE
DEPARTMENT OF TRANSPORTATION
CONDUIT DIVISION

ISSUED	REVISED	REVISED
8 / 2010		

PRECAST LINE MANHOLE
6' x 12' x 7' HEADROOM
TOP HALF

STANDARD NO.
BC 826.01-1

SCALE : NONE

SHEET 1 OF 2

NOTE: ALTERNATE DESIGNS ON HS-20-44 LOADING WITH 1' TO 3' COVER WILL BE ACCEPTABLE

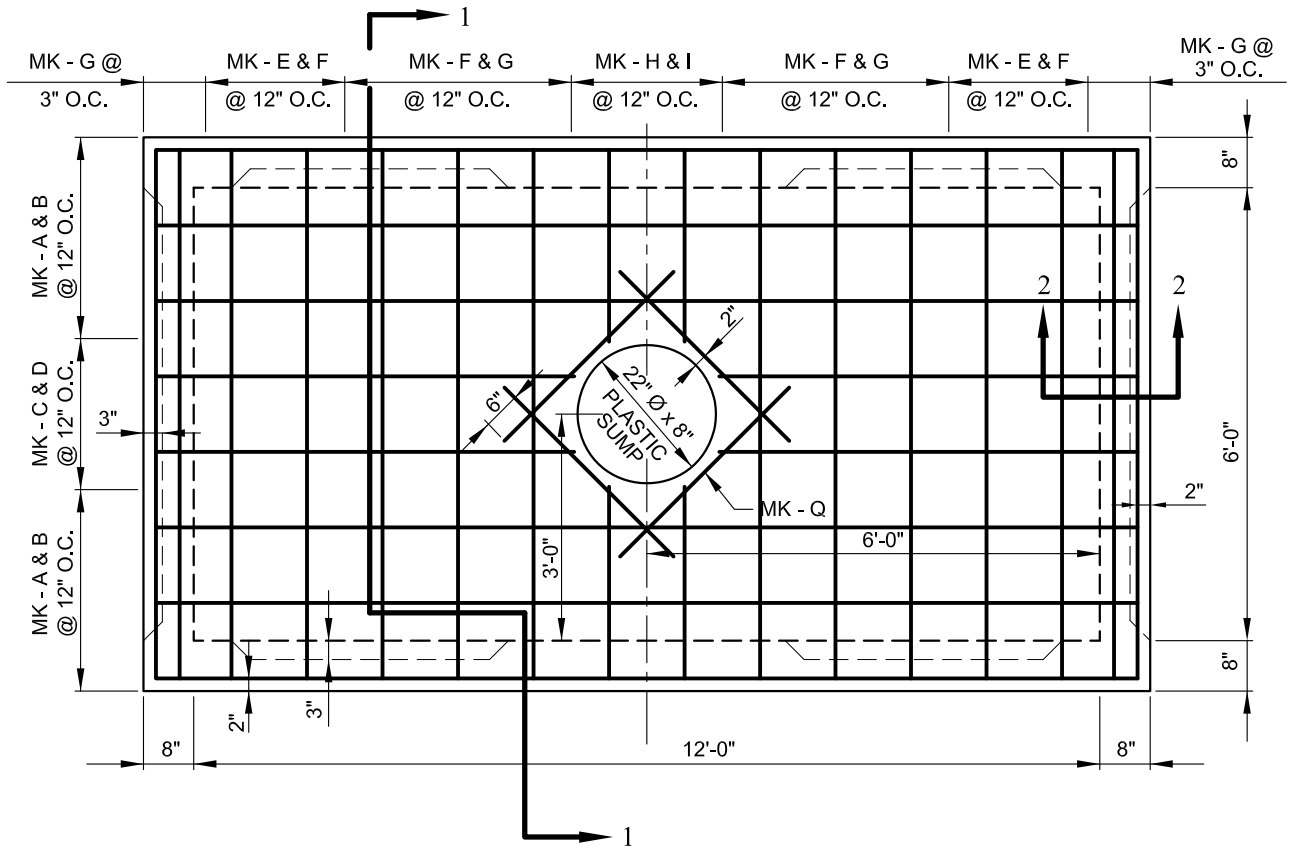

PLAN - BOTTOM HALF

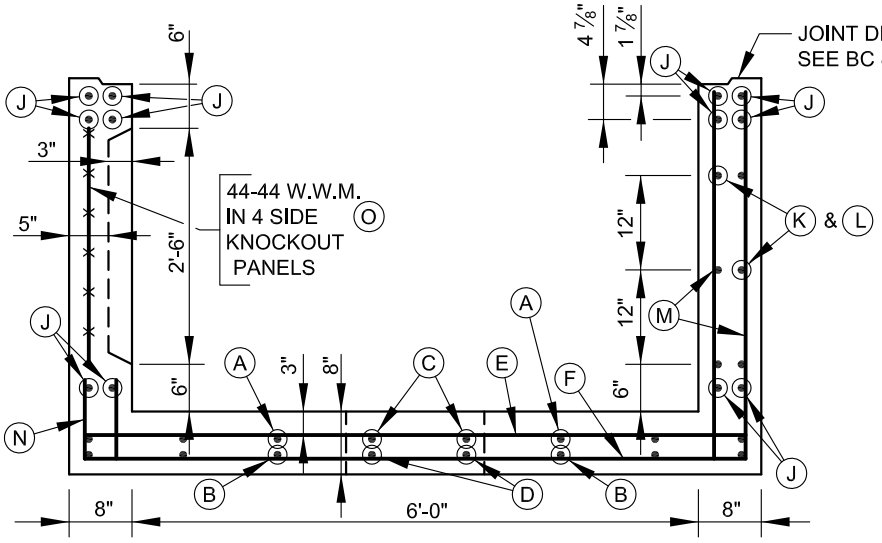

SECTION 1-1

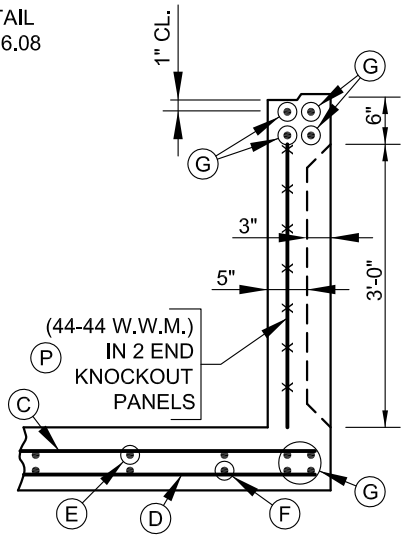

SECTION 2-2

TOP HALF (6' x 12' x 7' MANHOLE) SEE BC 826.01-1
BAR SCHEDULE (6' x 12' x 7' MANHOLE) SEE BC 826.04
KNOCKOUT DETAILS SEE BC 826.05
INSERTS FOR RECESSED EXTENSION SEE BC 826.06
ACCESSORIES FOR PRECAST MANHOLES SEE BC 826.08
STANDARD ACCESS STACK SEE BC 825.11
PRECAST RECESSED EXTENSION SEE BC 826.07-7

GENERAL NOTES

SPECIFICATIONS	LATEST DEPARTMENT OF GENERAL SERVICES
CONCRETE	f'_c = 5,000 PSI - MIX AS APPROVED BY ENGR.
REINFORCING	ASTM A615, GRADE 60
WELDED WIRE MESH	ASTM A185
LOADING	HS 25 TRUCK LOADING

APPROVED:

CHIEF, CONDUIT DIVISION

DIRECTOR, DEPARTMENT OF TRANSPORTATION

CITY OF BALTIMORE
DEPARTMENT OF TRANSPORTATION
CONDUIT DIVISION

ISSUED	REVISED	REVISED
8 / 2010		

PRECAST LINE MANHOLE 6' x 12' x 7' HEADROOM BOTTOM HALF

STANDARD NO. BC 826.01-2

SCALE : NONE

SHEET 2 OF 2

NOTE: ALTERNATE DESIGNS ON HS-20-44 LOADING WITH 1' TO 3' COVER WILL BE ACCEPTABLE

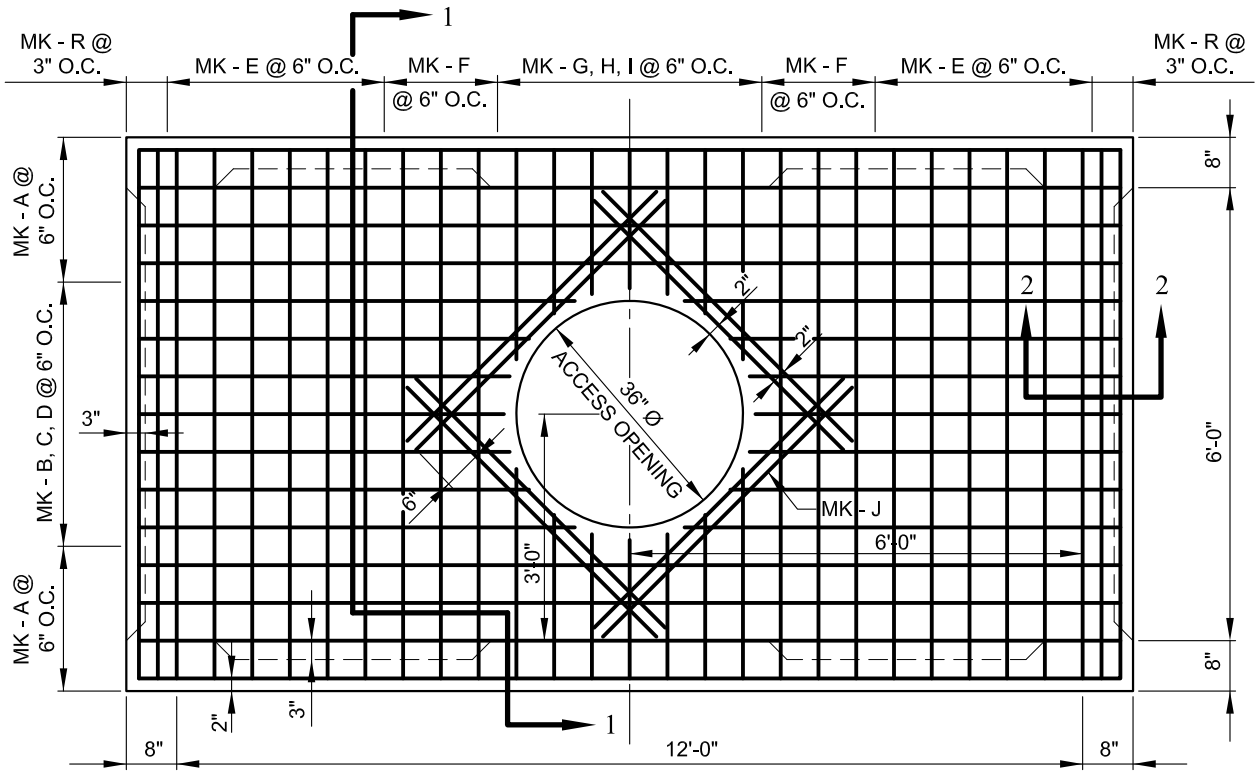

PLAN - TOP HALF

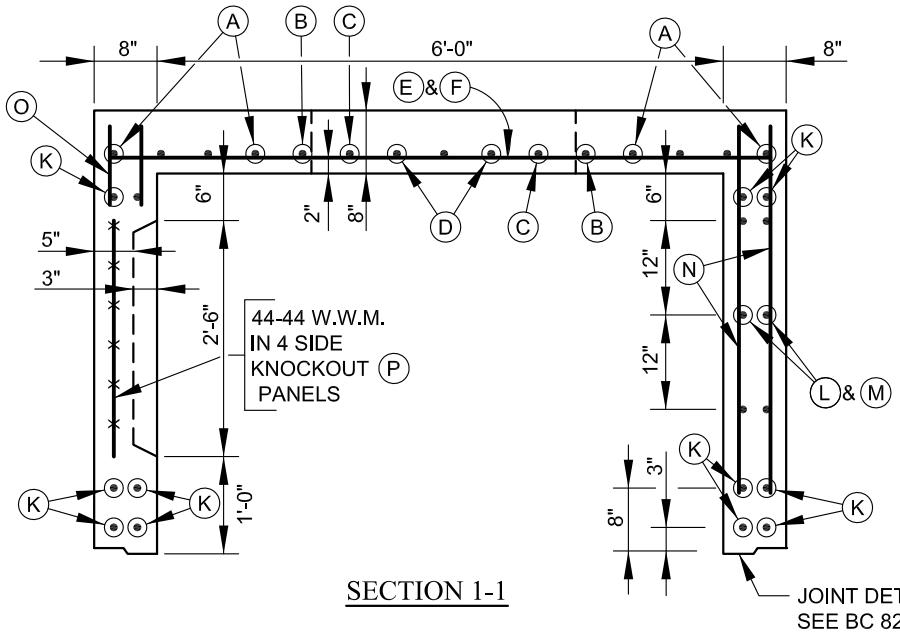

SECTION 1-1

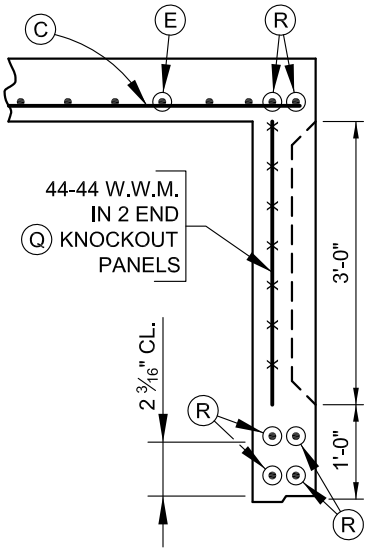

SECTION 2-2

BOTTOM HALF (6' x 12' x 8' MANHOLE) SEE BC 826.02-2
BAR SCHEDULE (6' x 12' x 8' MANHOLE) SEE BC 826.04
KNOCKOUT DETAILS SEE BC 826.05
INSERTS FOR RECESSED EXTENSION SEE BC 826.06
ACCESSORIES FOR PRECAST MANHOLES SEE BC 826.08
STANDARD ACCESS STACK SEE BC 825.11
PRECAST RECESSED EXTENSION SEE BC 826.07-1

GENERAL NOTES

SPECIFICATIONS - - - - - - LATEST DEPARTMENT OF GENERAL SERVICES
CONCRETE - - - - - - - - - - f 'c = 5000 PSI - MIX AS APPROVED BY ENGR.
REINFORCING - - - - - - - -ASTM A615, GRADE 60
WELDED WIRE MESH - - ASTM A185
LOADING - - - - - - - - - - - -HS 25 TRUCK LOADING

APPROVED:

CHIEF, CONDUIT DIVISION

DIRECTOR, DEPARTMENT OF TRANSPORTATION

CITY OF BALTIMORE
DEPARTMENT OF TRANSPORTATION
CONDUIT DIVISION

ISSUED	REVISED	REVISED
8 / 2010		

PRECAST LINE MANHOLE
6' X 12' X 8' HEADROOM
TOP HALF

STANDARD NO.
BC 826-02-1

SCALE : NONE

SHEET 1 OF 2

NOTE: ALTERNATE DESIGNS ON HS-20-44 LOADING WITH 1' TO 3' COVER WILL BE ACCEPTABLE

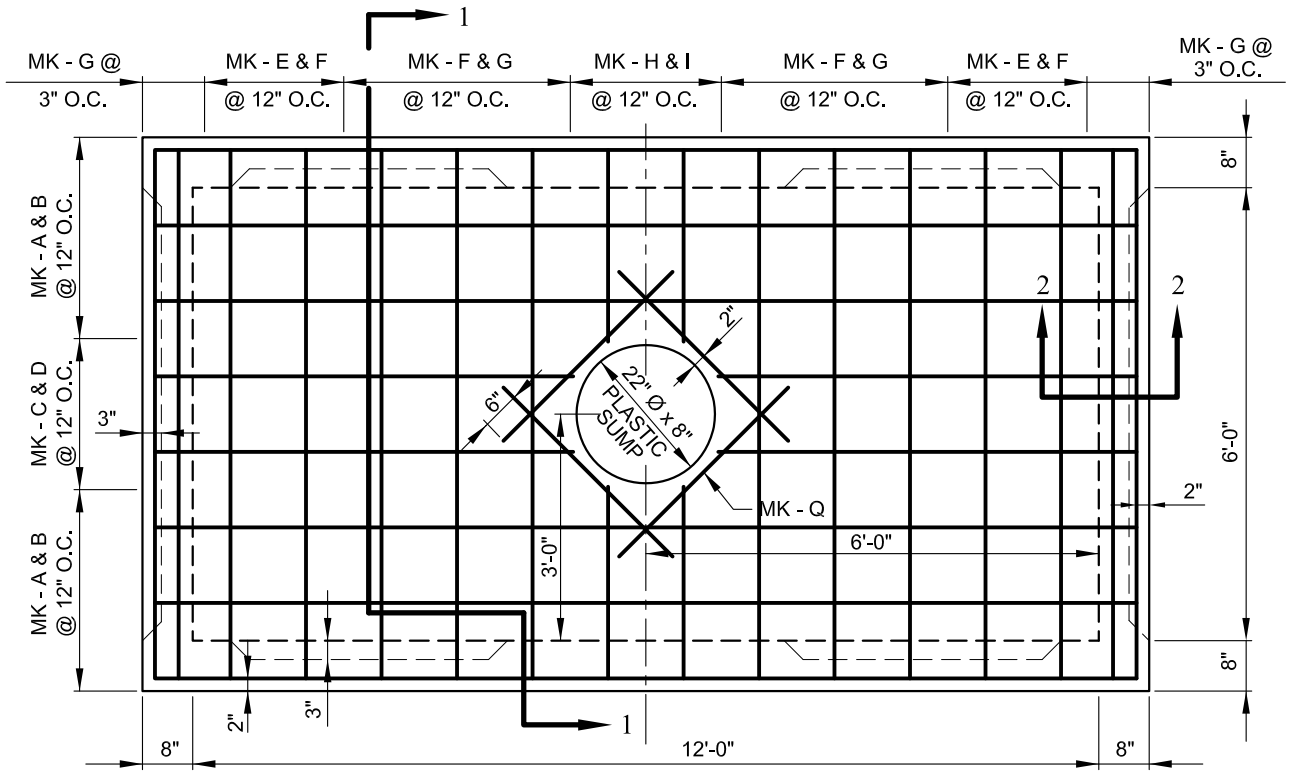

PLAN - BOTTOM HALF

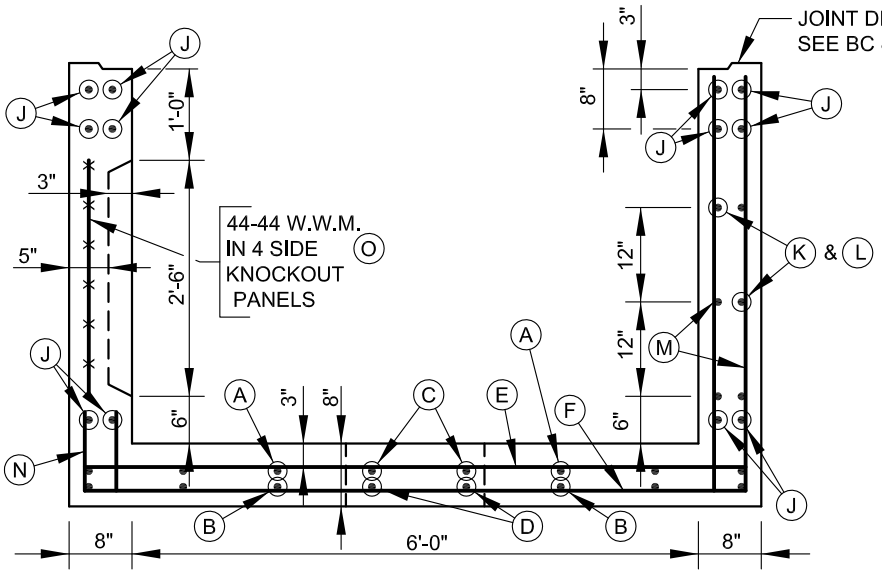

SECTION 1-1

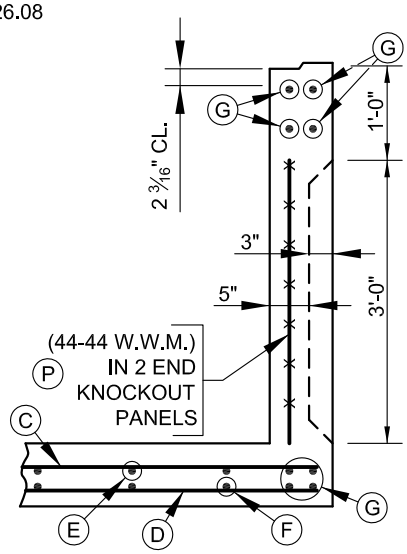

SECTION 2-2

TOP HALF (6' x 12' x 8' MANHOLE) SEE BC 826.02-1
BAR SCHEDULE (6' x 12' x 8' MANHOLE) SEE BC 826.04
KNOCKOUT DETAILS SEE BC 826.05
INSERTS FOR RECESSED EXTENSION SEE BC 826.06
ACCESSORIES FOR PRECAST MANHOLES SEE BC 826.08
STANDARD ACCESS STACK SEE BC 825.11
PRECAST RECESSED EXTENSION SEE BC 826.07-1

GENERAL NOTES

SPECIFICATIONS	LATEST DEPARTMENT OF GENERAL SERVICES
CONCRETE	f 'c = 5,000 PSI - MIX AS APPROVED BY ENGR.
REINFORCING	ASTM A615, GRADE 60
WELDED WIRE MESH	ASTM A185
LOADING	HS 25 TRUCK LOADING

APPROVED:

CHIEF, CONDUIT DIVISION

DIRECTOR, DEPARTMENT OF TRANSPORTATION

CITY OF BALTIMORE
DEPARTMENT OF TRANSPORTATION
CONDUIT DIVISION

ISSUED	REVISED	REVISED
8 / 2010		

PRECAST LINE MANHOLE 6' x 12' x 8' HEADROOM BOTTOM HALF

STANDARD NO. BC 826.02-2

SCALE : NONE

SHEET 2 OF 2

NOTE: ALTERNATE DESIGNS ON HS-20-44 LOADING WITH 1' TO 3' COVER WILL BE ACCEPTABLE

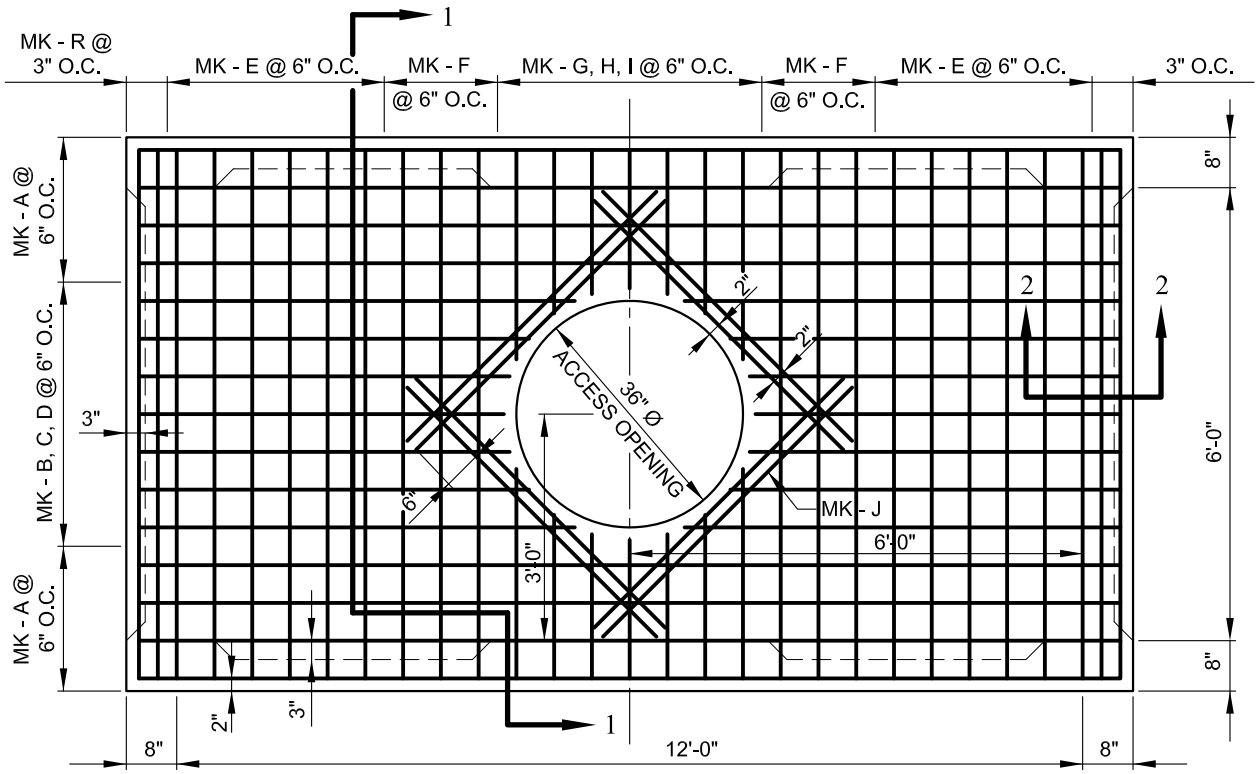

PLAN - TOP HALF

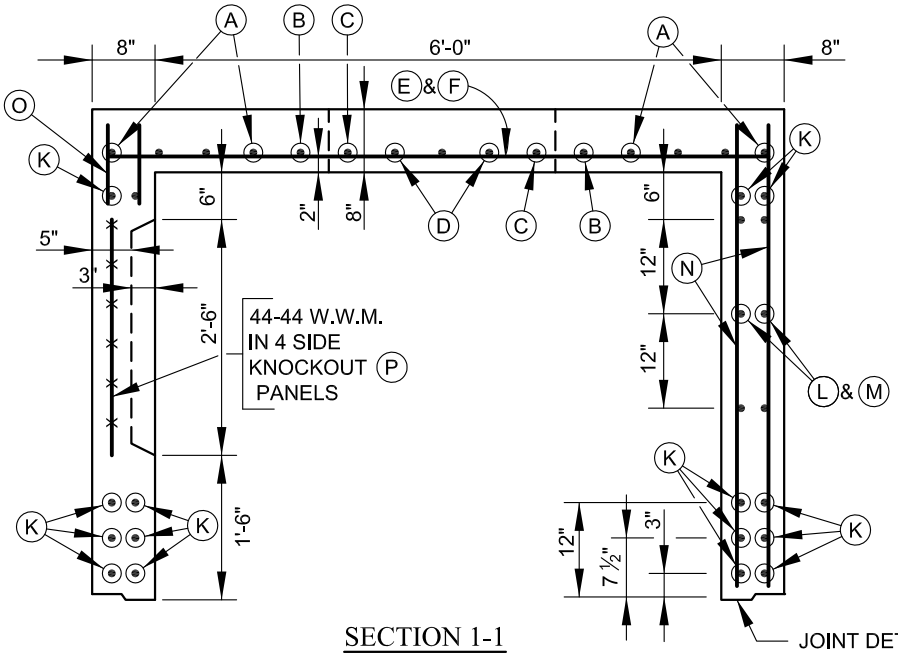

SECTION 1-1

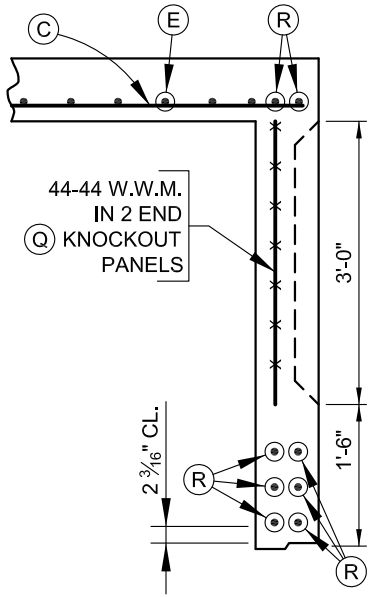

SECTION 2-2

BOTTOM HALF (6' x 12' x 9' MANHOLE) SEE BC 826.03-2
BAR SCHEDULE (6' x 12' x 9' MANHOLE) SEE BC 826.06
KNOCKOUT DETAILS SEE BC 826.05
INSERTS FOR RECESSED EXTENSION SEE BC 826.06
ACCESSORIES FOR PRECAST MANHOLES SEE BC 826.08
STANDARD ACCESS STACK SEE BC 825.11
PRECAST RECESSED EXTENSION SEE BC 826.07-1

GENERAL NOTES

SPECIFICATIONS - - - - - - LATEST DEPARTMENT OF GENERAL SEVICES
CONCRETE - - - - - - - - - - f'_c = 5000 PSI - MIX AS APPROVED BY ENGR.
REINFORCING - - - - - - - - ASTM A615, GRADE 60
WELDED WIRE MESH - - ASTM A185
LOADING - - - - - - - - - - - - HS 25 TRUCK LOADING

APPROVED:

CHIEF, CONDUIT DIVISION

DIRECTOR, DEPARTMENT OF TRANSPORTATION

CITY OF BALTIMORE
DEPARTMENT OF TRANSPORTATION
CONDUIT DIVISION

ISSUED	REVISED	REVISED
8 / 2010		

PRECAST LINE MANHOLE
6' X 12' X 9' HEADROOM
TOP HALF

STANDARD NO.
BC 826.03-1

SCALE : NONE

NOTE: ALTERNATE DESIGNS ON HS-20-44 LOADING WITH 1' TO 3' COVER WILL BE ACCEPTABLE

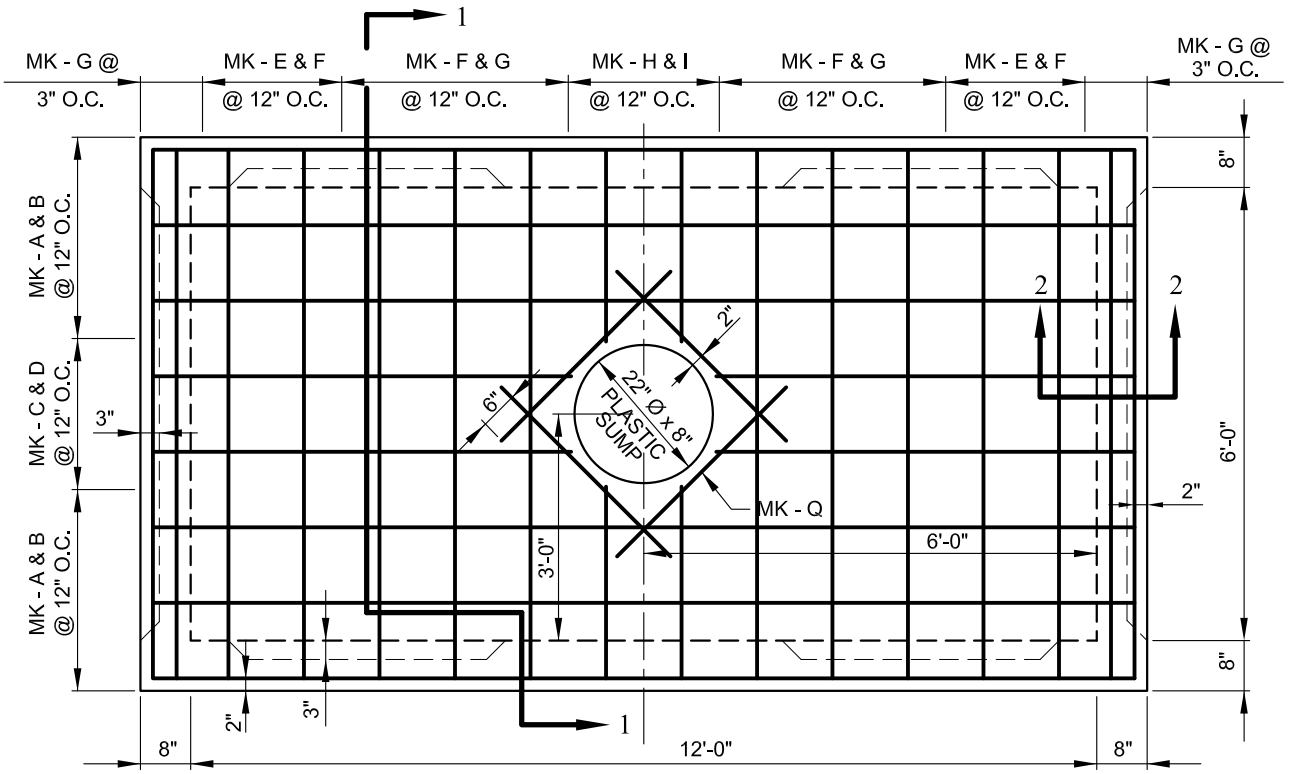

PLAN - BOTTOM HALF

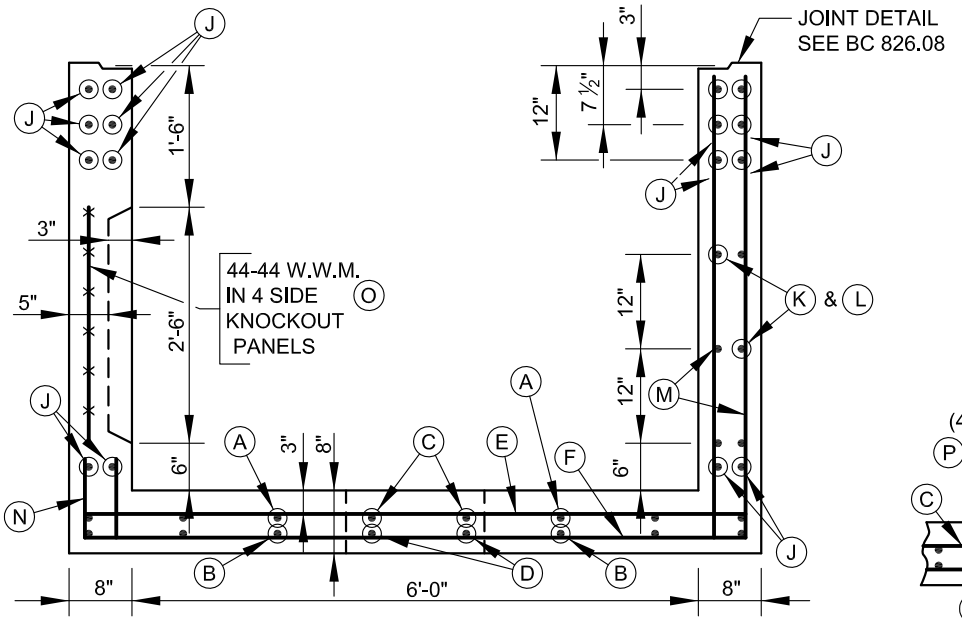

SECTION 1-1

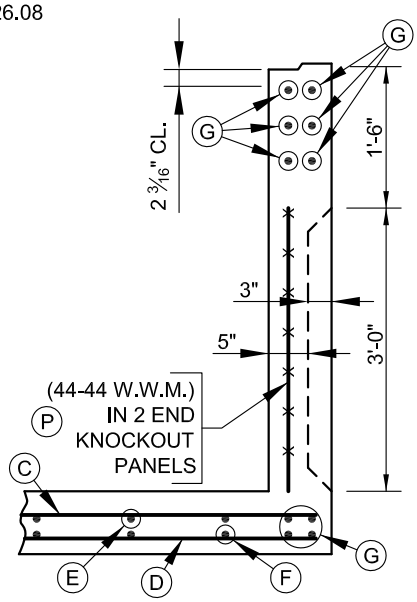

SECTION 2-2

TOP HALF (6' x 12' x 9' MANHOLE) SEE BC 826.03-1
BAR SCHEDULE (6' x 12' x 9' MANHOLE) SEE BC 826.04
KNOCKOUT DETAILS SEE BC 826.05
INSERTS FOR RECESSED EXTENSION SEE BC 826.06
ACCESSORIES FOR PRECAST MANHOLES SEE BC 826.08
STANDARD ACCESS STACK SEE BC 825.11
PRECAST RECESSED EXTENSION SEE BC 826.07-1

GENERAL NOTES

SPECIFICATIONS - - - - - - LATEST DEPARTMENT OF GENERAL SERVICES
CONCRETE - - - - - - - - - - f'_c = 5000 PSI - MIX AS APPROVED BY ENGR.
REINFORCING - - - - - - - - ASTM A615, GRADE 60
WELDED WIRE MESH - - ASTM A185
LOADING - - - - - - - - - - - - HS 25 TRUCK LOADING

APPROVED:

CHIEF, CONDUIT DIVISION

DIRECTOR, DEPARTMENT OF TRANSPORTATION

CITY OF BALTIMORE
DEPARTMENT OF TRANSPORTATION
CONDUIT DIVISION

ISSUED	REVISED	REVISED
8 / 2010		

PRECAST LINE MANHOLE
6' x 12' x 9' HEADROOM
BOTTOM HALF

STANDARD NO.
BC 826.03-2

SCALE : NONE

SHEET 2 OF 2

APPROVED:

CHIEF, CONDUIT DIVISION

DIRECTOR, DEPARTMENT OF TRANSPORTATION

CITY OF BALTIMORE
DEPARTMENT OF TRANSPORTATION
CONDUIT DIVISION

PRECAST LINE MANHOLE
6' x 12' x 7' - 8' - 9' HR
BAR SCHEDULE

STANDARD NO.
BC 826.04

SCALE : NONE

SHEET 1 OF 1

ISSUED	REVISED	REVISED
8 / 2010		

PRECAST LINE MANHOLE - 6' x 12' x 7'- 8' - 9' HR.
BAR SCHEDULE - TOP HALF

WT. LBS.	MARK	SIZE	NO. REQ'D.	TYPE	A	B	C
354	A	9	8	99	13'-0"		
35	B	6	4	99	5'-9"		
31	C	6	4	99	5'-2"		
44	D	6	6	99	4'-10"		
126	E	6	12	99	7'-0"		
143	F	9	6	99	7'-0"		
17	G	6	4	99	2'-9"		
13	H	6	4	99	2'-2"		
17	I	6	6	99	1'-10"		
39	J	5	8	99	4'-8"		
(4)	K	7	(2)	99	13'-0"		
30	L	6	24	99	10"		
60	M	6	12	99	3'-4"		
(7)	N	5	16	99	(1)		
56	O	5	64	99	10"		
38	P	WWM	4	(44-44)	2'-9" HIGH x 4'-0" WIDE		
35	Q	WWM	2	(44-44)	3'-3" HIGH x 6'-3" WIDE		
(5)	R	7	(2)	99	7'-0"		

PRECAST LINE MANHOLE - 6' x 12' x 7'- 8' - 9' HR.
BAR SCHEDULE - BOTTOM HALF

WT. LBS.	MARK	SIZE	NO. REQ'D.	TYPE	A	B	C
117	A	6	6	99	13'-0"		
81	B	5	6	99	13'-0"		
33	C	6	4	99	5'-6"		
23	D	5	4	99	5'-6"		
42	E	6	4	99	7'-0"		
73	F	5	10	99	7'-0"		
(6)	G	7	(3)	99	7'-0"		
15	H	6	4	99	2'-6"		
10	I	5	4	99	2'-6"		
(4)	J	7	(2)	99	13'-0"		
30	K	6	24	99	10"		
60	L	6	12	99	3'-4"		
(7)	M	5	16	99	(1)		
56	N	5	64	99	10"		
38	O	WWM	4	(44-44)	2'-9" HIGH x 4'-0" WIDE		
69	P	WWM	4	(44-44)	3'-3" HIGH x 6'-3" WIDE		
26	Q	5	8	99	3'-2"		

QUANTITIES		
MANHOLE SIZE	CONC. C.Y.	STEEL LBS.
6' x 12' x 7'	11.51	2851
6' x 12' x 8'	12.47	2867
6' x 12' x 9'	13.42	3209

	7' HR.	8' HR.	9' HR.
(1)	3'-10 1/2"	4'-4 1/2"	4'-10 1/2"
(2)	12	12	16
(3)	16	16	20
(4)	#319	#319	#425

	7' HR.	8' HR.	9' HR.
(5)	#172	#172	#229
(6)	#200	#200	#257
(7)	#65	#73	#81

TYPE 99

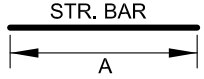

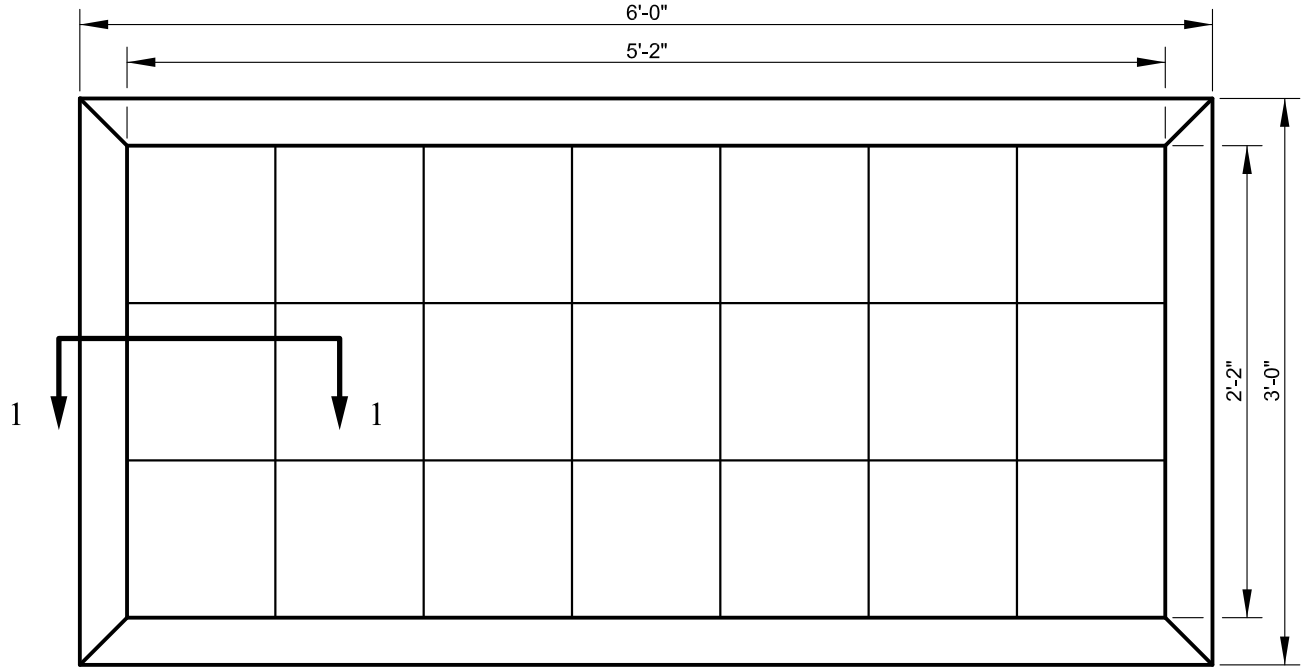

END KNOCKOUT

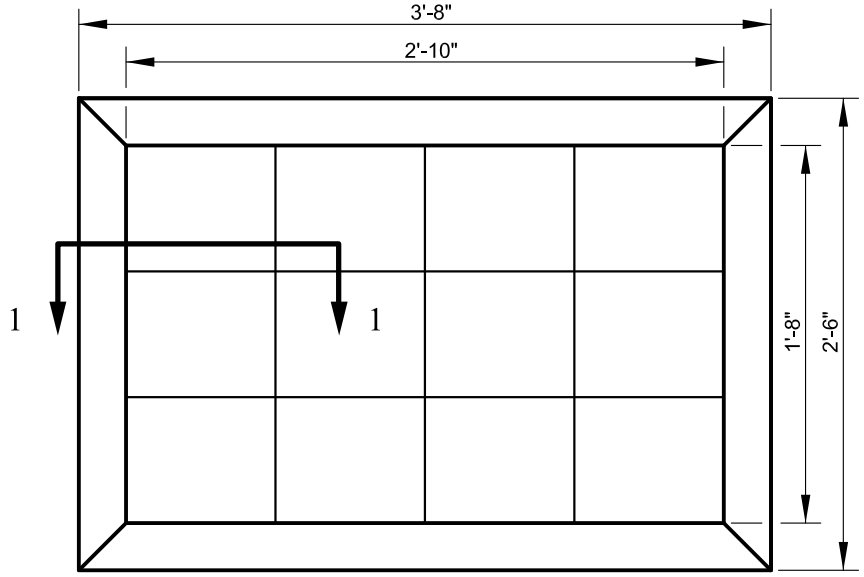

SIDE KNOCKOUT

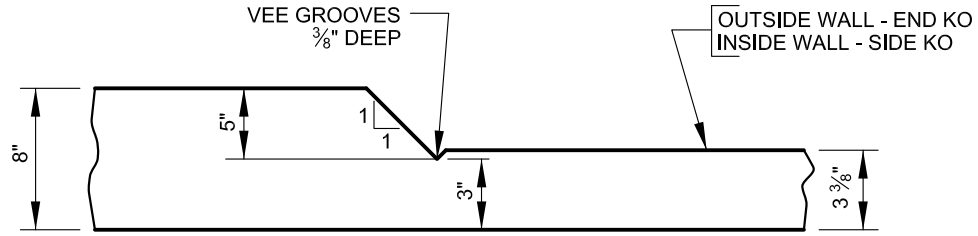

SECTION 1-1

APPROVED:

CHIEF, CONDUIT DIVISION

DIRECTOR, DEPARTMENT OF TRANSPORTATION

CITY OF BALTIMORE
DEPARTMENT OF TRANSPORTATION
CONDUIT DIVISION

END AND SIDE KNOCKOUT DETAILS PRECAST MANHOLE

ISSUED	REVISED	REVISED
8 / 2010		

STANDARD NO.
BC 826.05

SCALE : NONE

SHEET 1 OF 1

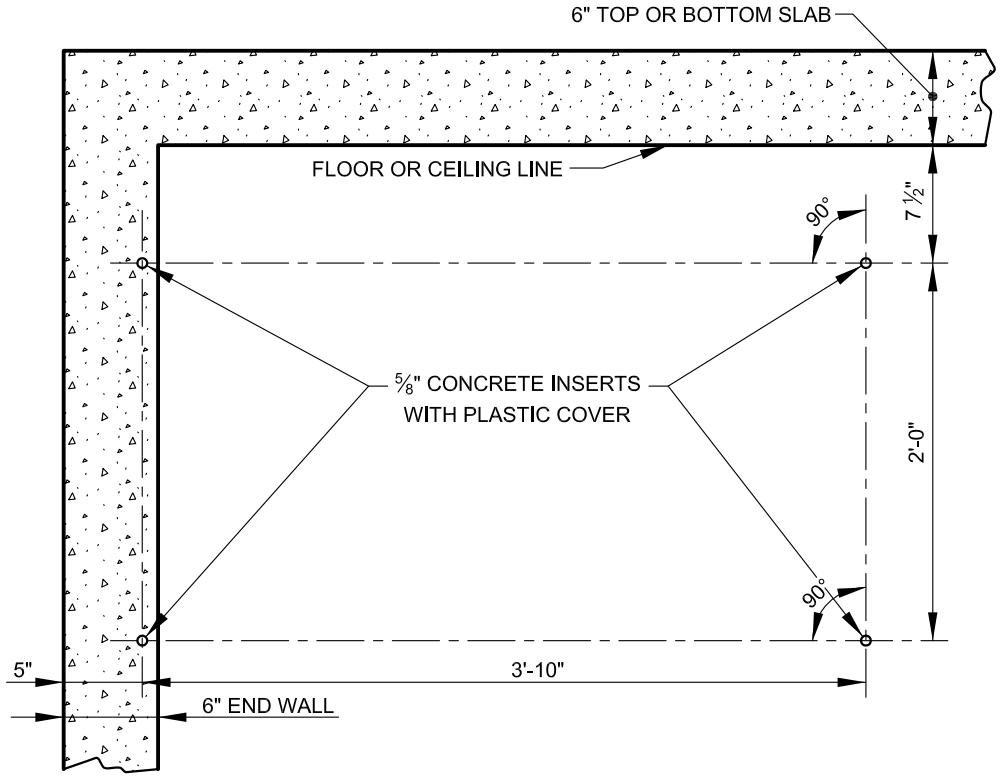

NOTES:

CONCRETE INSERTS FOR RECESSED EXTENSIONS
TYPE AS APPROVED BY ENGINEER
⅝" - 11 N.C. (3" MIN. LENGTH)

CAST 4 INSERTS IN THE OUTSIDE FACE OF WALL AT EACH SIDE KNOCKOUT. SEE DETAIL ABOVE FOR LOCATION OF EACH ⅝" INSERT.

32 - ⅝" INSERTS REQUIRED FOR EACH PRECAST LINE MANHOLE. INSTALL PLASTIC BOLTS OR COVER FOR PROTECTION OF INSERTS PRIOR TO USE.

APPROVED:

CHIEF, CONDUIT DIVISION

DIRECTOR, DEPARTMENT OF TRANSPORTATION

CITY OF BALTIMORE
DEPARTMENT OF TRANSPORTATION
CONDUIT DIVISION

ISSUED	REVISED	REVISED
8 / 2010		

INSERT DETAILS FOR RECESSED EXTENSION PRECAST MANHOLE

STANDARD NO.
BC 826.06

SCALE : NONE

SHEET 1 OF 1

4 - LIFTING INSERTS

¾" - 10 N.C. (3" MIN. LENGTH)

2 - ⅝" Ø BOLTS - 6" LONG (3" - 11 N.C.)

2 - ⅝" Ø BOLTS - 17" LONG (3" - 11 N.C.)

4 - ⅝" GALVANIZED WASHERS

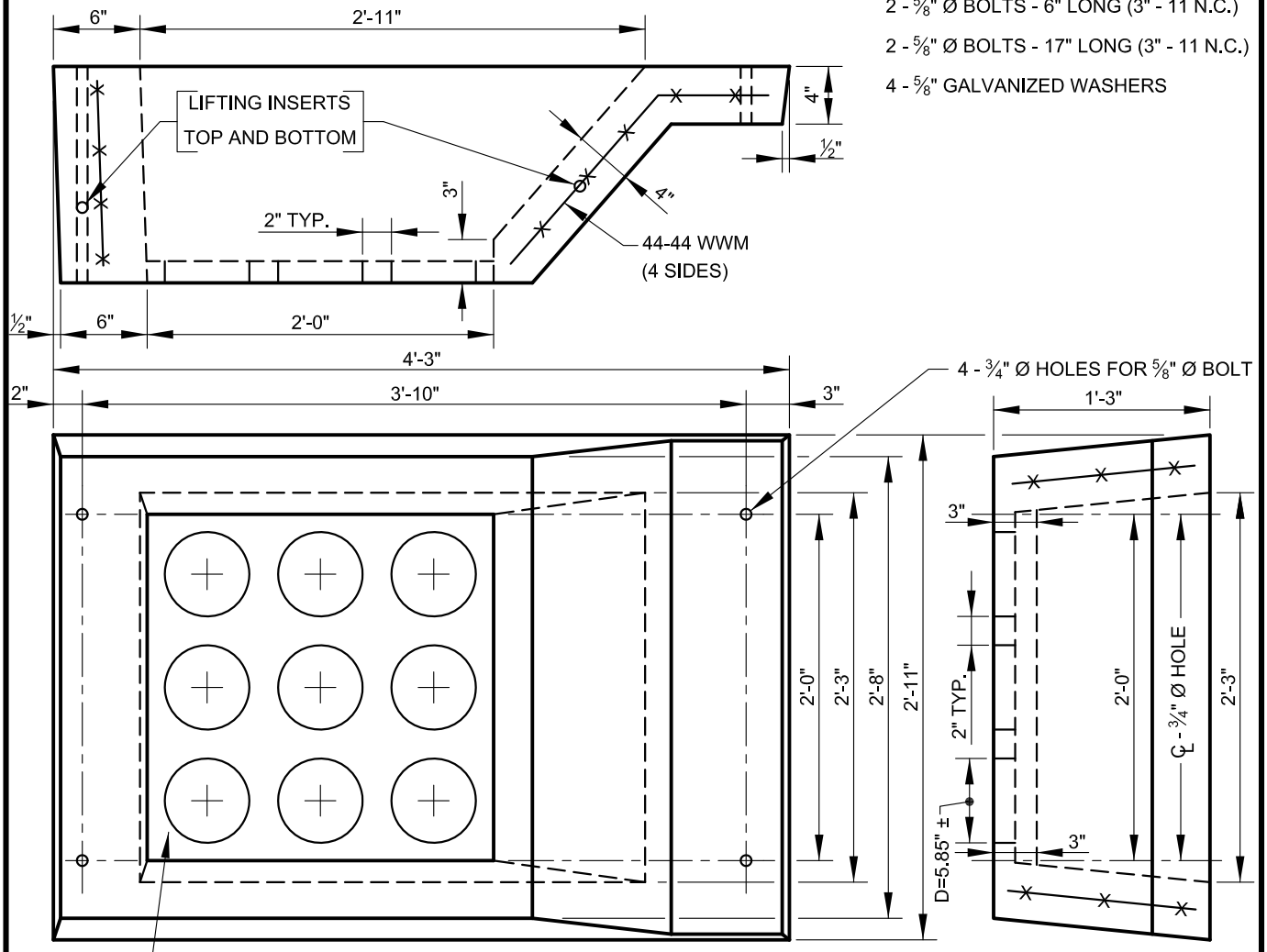

CAST 9-WAY PLASTIC TERMINATOR FOR 5" I.D. DUCT FLUSH WITH OUTSIDE FACE OF WALL

GENERAL NOTES

SPECIFICATIONS	LATEST DEPARTMENT OF GENERAL SERVICES
CONCRETE	MIX NO. 3
WELDED WIRE MESH	ASTM A185
COVER	1 ½" MINIMUM
PLASTIC TERMINATOR	TYPE AS APPROVED BY UTILITY ENGINEER
LIFTING DEVICES	TYPE AS APPROVED BY ENGINEER
BOLTS	BOLTS SHALL BE HOT DIPPED. GALVANIZED STEEL MEETING THE REQUIREMENTS OF ASTM A-307. GALVANIZING TO BE PER ASTM A-123. WASHERS TO BE COMPATIBLE.
MASTIC COMPOUND	PLACE ON MANHOLE WALL PRIOR TO ATTACHING RECESSED EXTENSION. MATERIAL SHALL MEET THE REQUIREMENTS SPECIFIED BY THE ENGINEER.

APPROVED:

CHIEF, CONDUIT DIVISION

DIRECTOR, DEPARTMENT OF TRANSPORTATION

CITY OF BALTIMORE
DEPARTMENT OF TRANSPORTATION
CONDUIT DIVISION

ISSUED	REVISED	REVISED
8 / 2010		

PRECAST RECESSED EXTENSION

STANDARD NO.
BC 826.07-1

SCALE : NONE

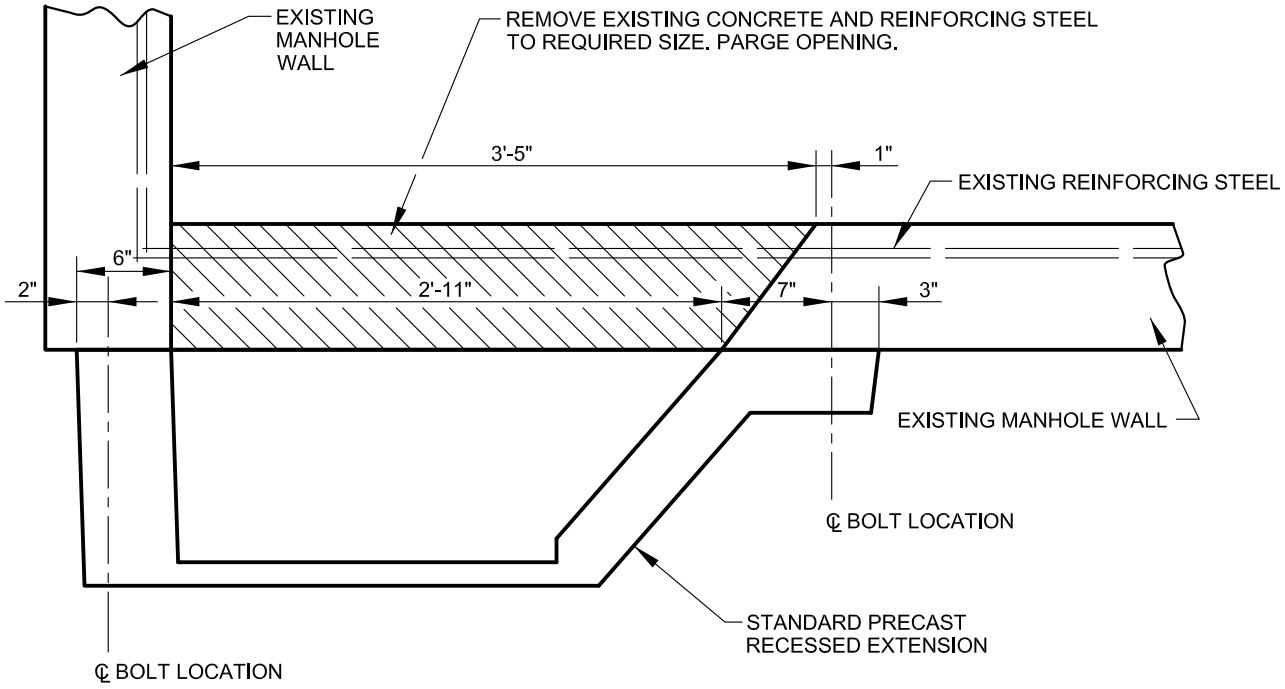

NOTE: FOR RECESSED EXTENSION DIMENSIONS, SEE BC 826.07-1

ADJUSTMENTS REQUIRED TO EXISTING MANHOLE WALLS TO ACCEPT PRECAST RECESSED EXTENSIONS.

APPROVED:

CHIEF, CONDUIT DIVISION

DIRECTOR, DEPARTMENT OF TRANSPORTATION

CITY OF BALTIMORE
DEPARTMENT OF TRANSPORTATION
CONDUIT DIVISION

ISSUED	REVISED	REVISED
8 / 2010		

PRECAST RECESSED EXTENSION MANHOLE ADJUSTMENTS

STANDARD NO.
BC 826.07-2

SCALE : NONE

SHEET 2 OF 2

APPROVED:

CHIEF, CONDUIT DIVISION

DIRECTOR, DEPARTMENT OF TRANSPORTATION

CITY OF BALTIMORE
DEPARTMENT OF TRANSPORTATION
CONDUIT DIVISION

ACCESSORIES FOR PRECAST MANHOLES

ISSUED	REVISED	REVISED
8 / 2010		

STANDARD NO.
BC 826.08

SCALE : NONE

SHEET 1 OF 1

THE FABRICATOR SHALL PROVIDE A MINIMUM OF FOUR LIFTING POINTS FOR EACH SECTION OF PRECAST MANHOLE. LIFTING DEVICES IN ALL STRUCTURES SHALL BE DESIGNED FOR WORKING LOADS WITH A MINIMUM SAFETY FACTOR OF 5 TO 1 BASED ON THE WEIGHT OF THE STRUCTURE AND UTILIZING NO MORE THAN 2 LOAD POINTS. THESE WORKING LOADS SHALL BE COMPENSATED FOR IN THE DESIGN OF THE STRUCTURE AND SHALL BE CONSIDERED INDEPENDENT OF THE IMPOSED DESIGN LOADS.

LIFTING DEVICES

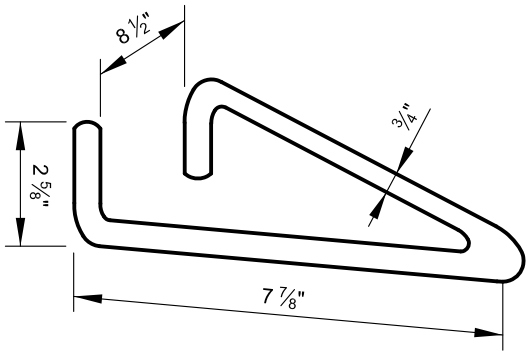

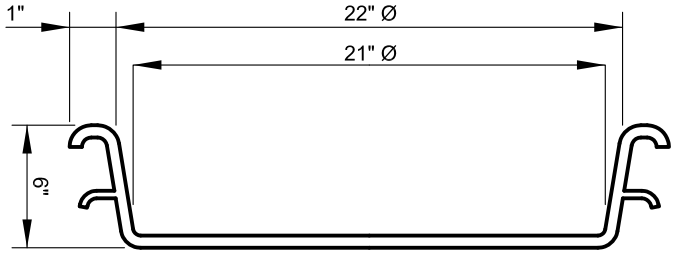

PLASTIC SHALL MEET THE THICKNESS AND MATERIAL REQUIREMENTS SPECIFIED BY THE ENGINEER.

PLASTIC SUMP

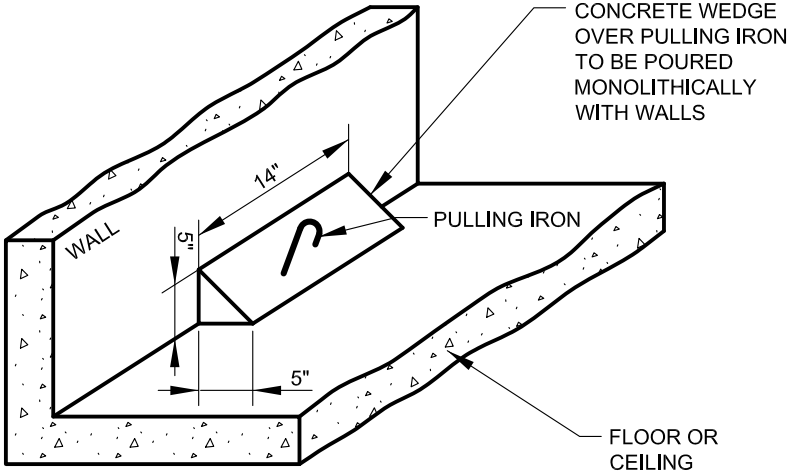

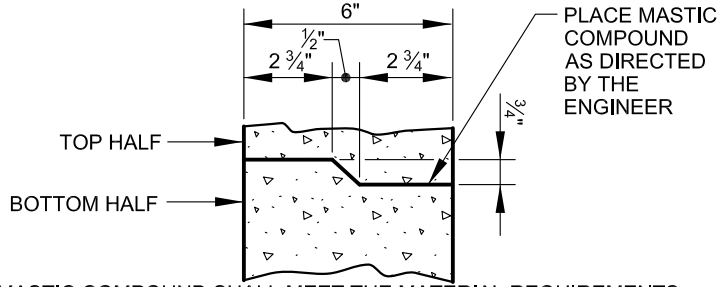

MASTIC COMPOUND SHALL MEET THE MATERIAL REQUIREMENTS SPECIFIED BY THE ENGINEER.

JOINT DETAIL

POSITION EACH PULLING IRON OPPOSITE THE CENTER LINE OF EACH KNOCKOUT IN BOTH THE TOP AND BOTTOM HALF OF MANHOLE AND PROVIDE A CLEAR OPENING OF APPROXIMATELY 3 INCHES IN THE EYE. 12 PULLING IRONS ARE REQUIRED FOR EACH PRECAST LINE MANHOLE.

PULLING IRONS SHALL BE HOT DIPPED GALVANIZED STEEL MEETING THE REQUIREMENTS OF ASTM A-36. GALVANIZING SHALL BE CLASS A PER ASTM-153 AND A-386.

PULLING IRON

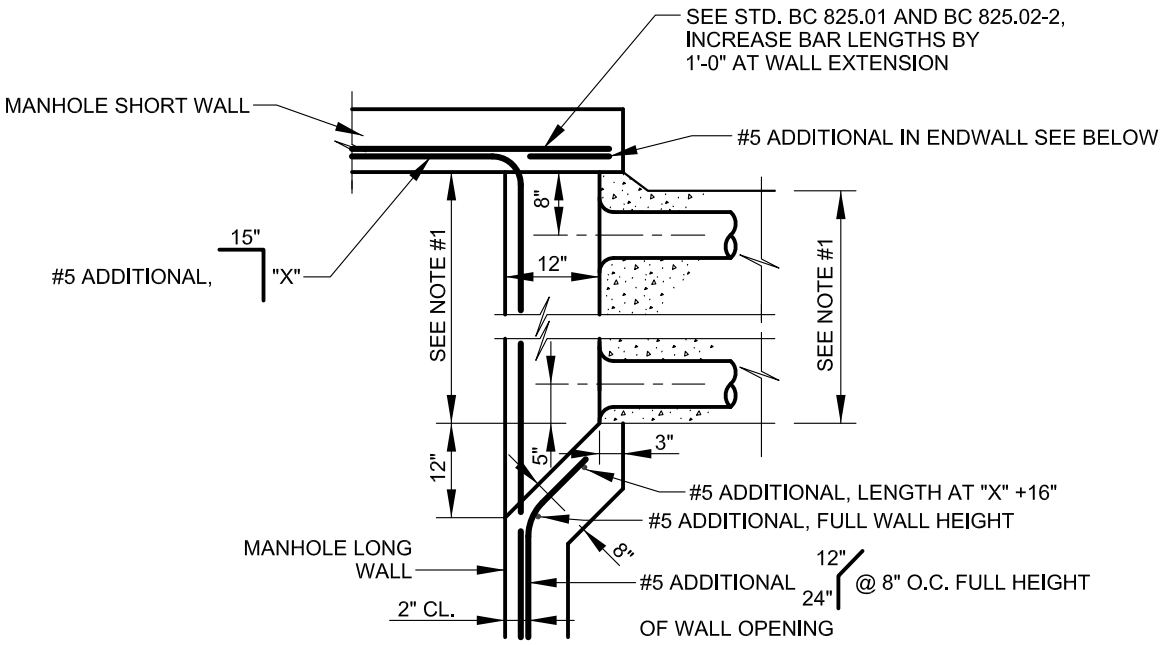

SECTION 'A-A'

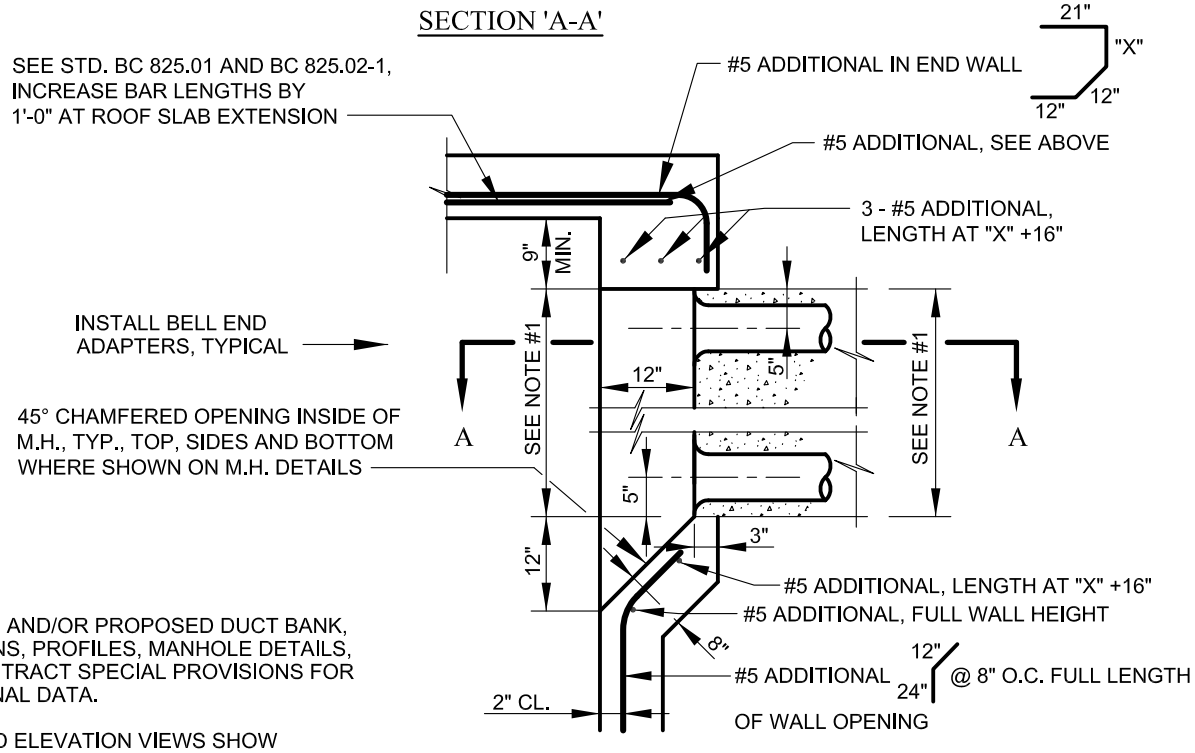

ELEVATION

NOTE:

1. EXISTING AND/OR PROPOSED DUCT BANK, SEE PLANS, PROFILES, MANHOLE DETAILS, AND CONTRACT SPECIAL PROVISIONS FOR ADDITIONAL DATA.
2. PLAN AND ELEVATION VIEWS SHOW CONDITION WHERE DUCTS ENTER M.H. ADJACENT TO SHORT WALL AND ADJACENT TO UNDERSIDE OF ROOF SLAB. WHERE ENTRANCES DIFFER, CONSTRUCT ADDITIONAL CHAMFERED ENTRANCES AS SHOWN.
3. REINF. BAR "X" DIMENSION IS LENGTH, OR HEIGHT, OF WALL OPENING TO ACCOMMODATE DUCT INSTALLATION, BARS INCORPORATING "X" DIMENSION SHALL BE FIELD MEASURED, BENT, AND CUT.

CAST-IN-PLACE RECESSED WALL EXTENSION

APPROVED:

CHIEF, CONDUIT DIVISION

DIRECTOR, DEPARTMENT OF TRANSPORTATION

CITY OF BALTIMORE
DEPARTMENT OF TRANSPORTATION
CONDUIT DIVISION

ISSUED	REVISED	REVISED
8 / 2010		

CAST-IN-PLACE
RECESSED WALL EXTENSION

STANDARD NO.
BC 826.09

SCALE : NONE

SHEET 1 OF 1

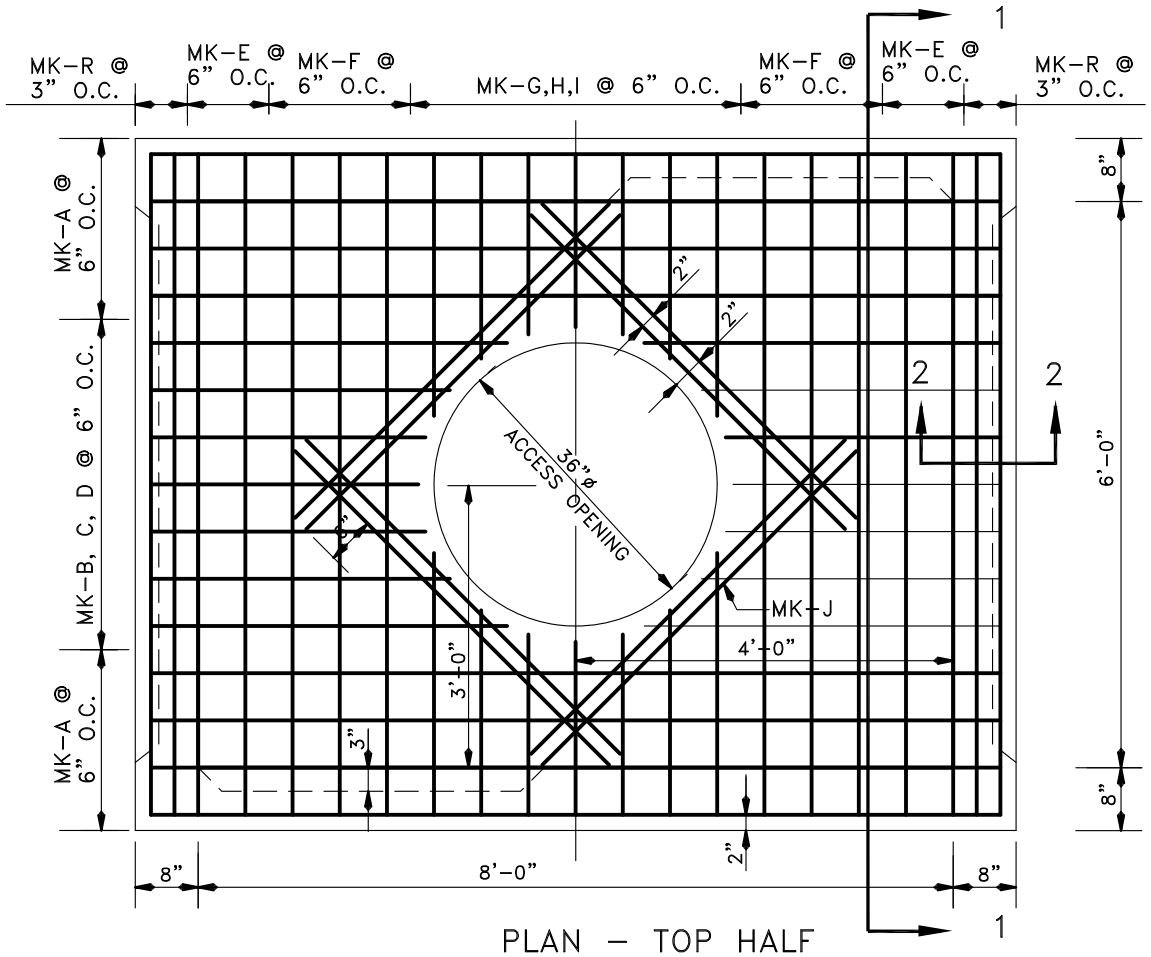

PLAN – TOP HALF

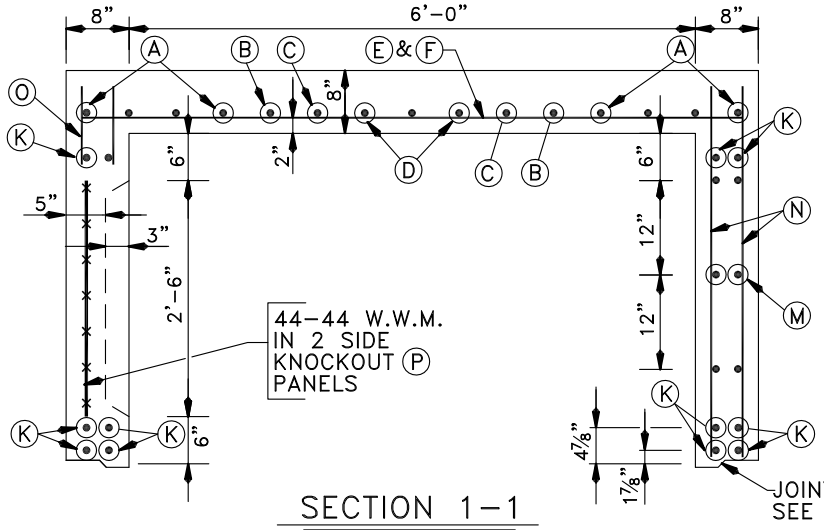

SECTION 1–1

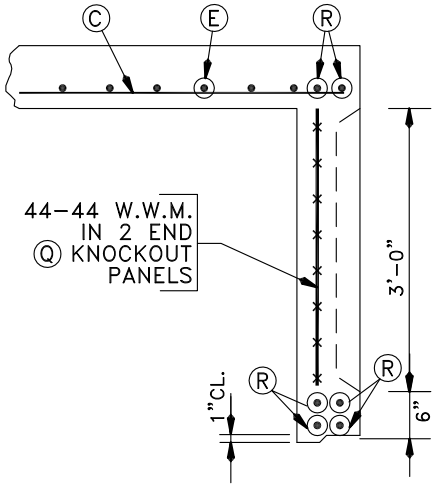

SECTION 2–2

GENERAL NOTES

BOTTOM HALF (6'x8'x7' MANHOLE) SEE BC 827.01–2
BAR SCHEDULE (6'x8'x7' MANHOLE) SEE BC 827.03
KNOCKOUT DETAILS SEE BC 826.05
INSERTS FOR RECESSED EXTENSION SEE BC 826.06
ACCESSORIES FOR PRECAST MANHOLES SEE BC 826.08
STANDARD ACCESS STACK SEE BC 825.11
PRECAST RECESSED EXTENSION SEE BC 826.07–1

SPECIFICATIONS.....LATEST DEPARTMENT OF GENERAL SERVICES
CONCRETE.....f'_c =5,000 PSI–MIX AS APPROVED BY ENGINEER
REINFORCING.....ASTM A615, GRADE 60
WELDED WIRE MESH....ASTM A185
LOADING.....HS 25 TRUCK LOADING

APPROVED:

CHIEF, CONDUIT DIVISION

DIRECTOR, DEPARTMENT OF TRANSPORTATION

CITY OF BALTIMORE
DEPARTMENT OF TRANSPORTATION
CONDUIT DIVISION

ISSUED	REVISED	REVISED
8 / 2010		

PRECAST MANHOLE
6' x 8' x 7' HEADROOM
TOP HALF

STANDARD NO.
BC 827.01-1

SCALE : NONE | SHEET 1 OF 2

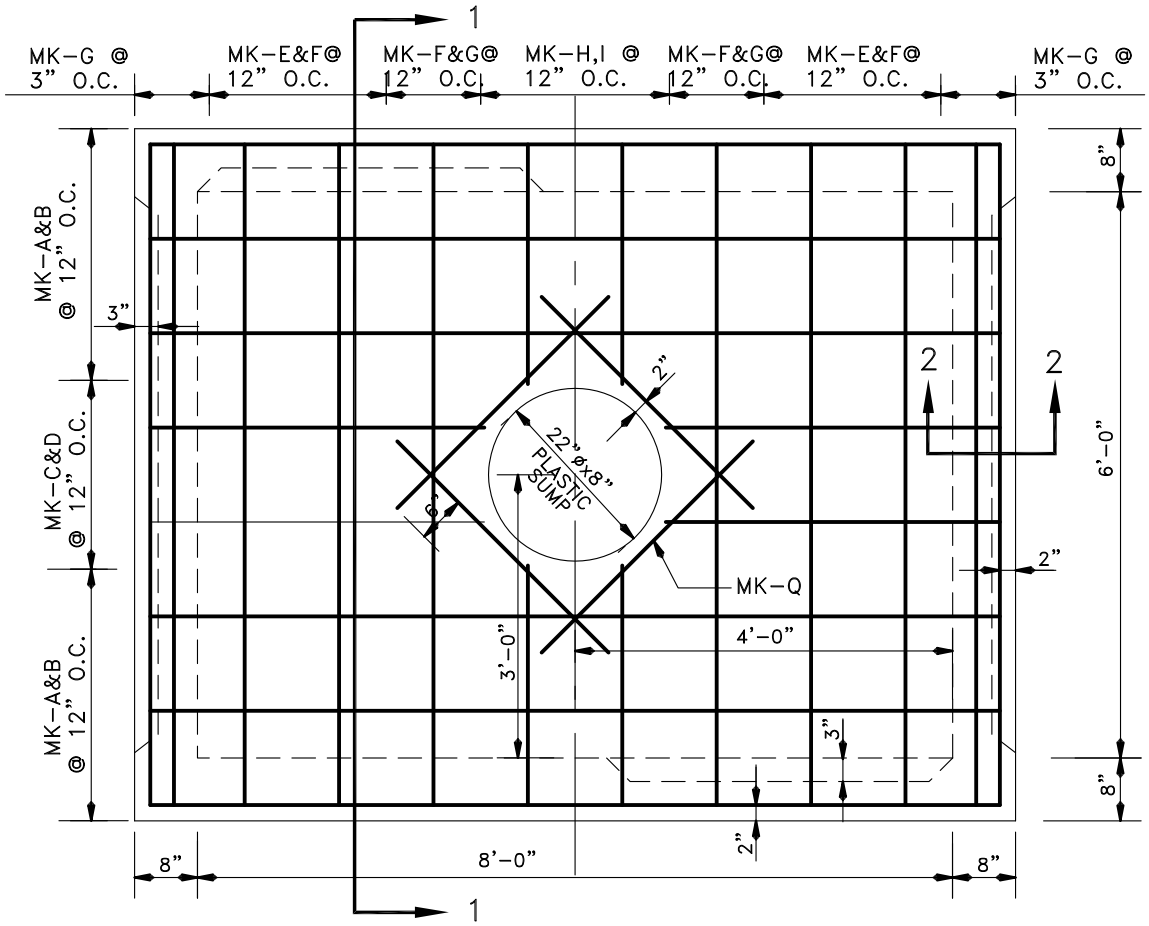

PLAN – BOTTOM HALF

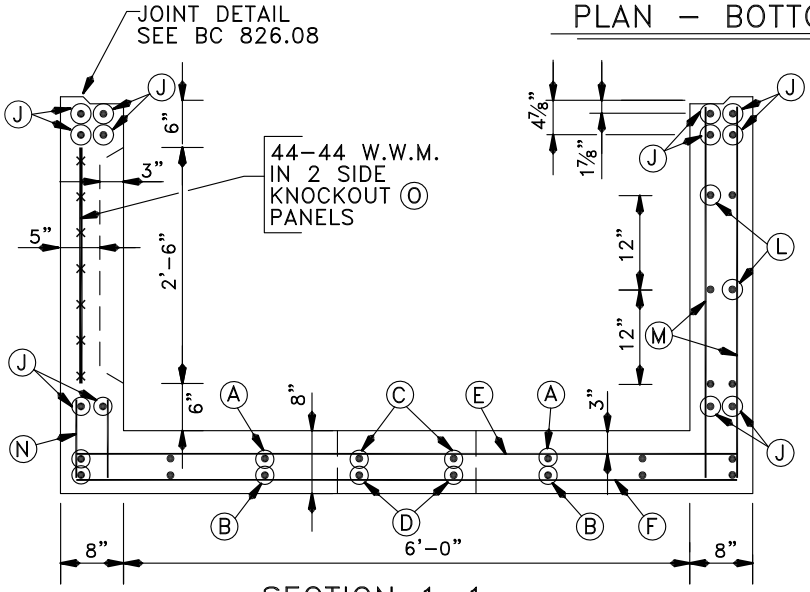

SECTION 1–1

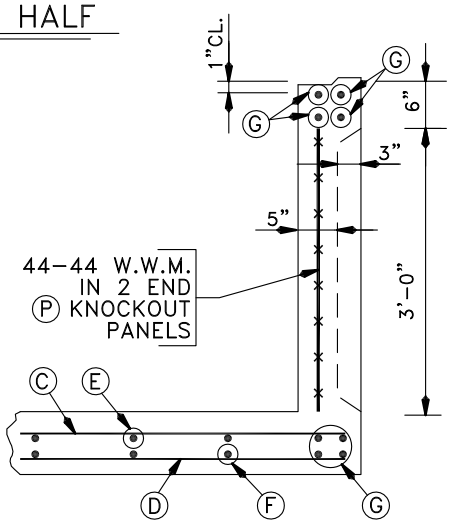

SECTION 2–2

TOP HALF (6'x8'x7' MANHOLE) SEE BC 827.01–1
BAR SCHEDULE (6'x8'x7' MANHOLE) SEE BC 827.03
KNOCKOUT DETAILS SEE BC 826.05
INSERTS FOR RECESSED EXTENSION SEE BC 826.06
ACCESSORIES FOR PRECAST MANHOLES SEE BC 826.08
STANDARD ACCESS STACK SEE BC 825.11
PRECAST RECESSED EXTENSION SEE BC 826.07–1

GENERAL NOTES

SPECIFICATIONS.....LATEST DEPARTMENT OF GENERAL SERVICES
CONCRETE.....f'_c =5,000 PSI–MIX AS APPROVED BY ENGINEER
REINFORCING.....ASTM A615, GRADE 60
WELDED WIRE MESH.....ASTM A185
LOADING.....HS 25 TRUCK LOADING

APPROVED:

CHIEF, CONDUIT DIVISION

DIRECTOR, DEPARTMENT OF TRANSPORTATION

CITY OF BALTIMORE
DEPARTMENT OF TRANSPORTATION
CONDUIT DIVISION

ISSUED	REVISED	REVISED
8 / 2010		

PRECAST MANHOLE
6' x 8' x 7' HEADROOM
BOTTOM HALF

STANDARD NO.
BC 827.01-2

SCALE : NONE | SHEET 2 OF 2

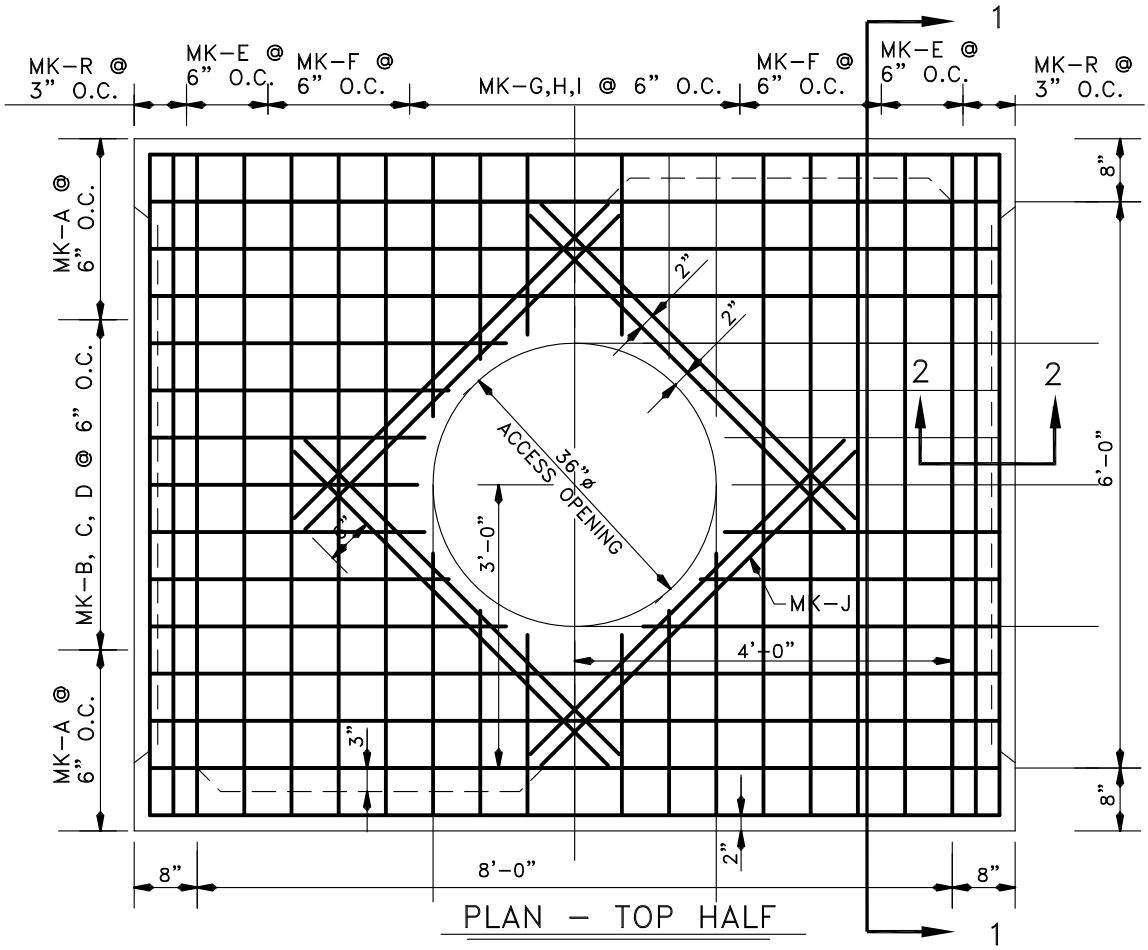

PLAN – TOP HALF

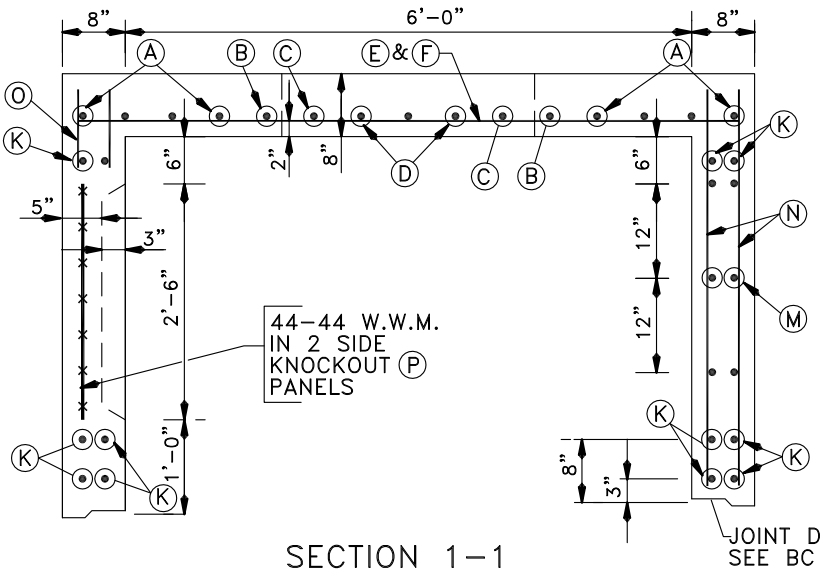

SECTION 1–1

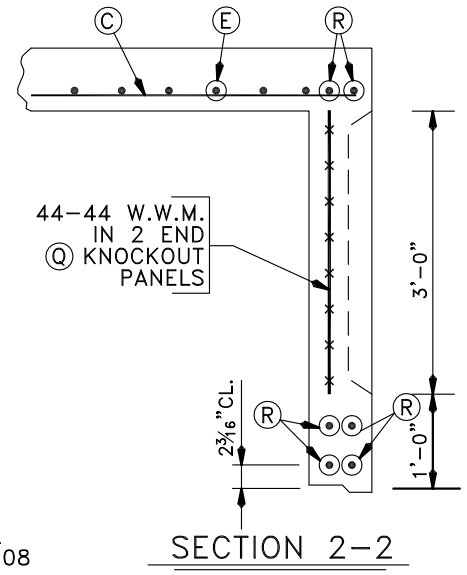

SECTION 2–2

GENERAL NOTES

BOTTOM HALF (6'x8'x8' MANHOLE) SEE BC 827.02-2
BAR SCHEDULE (6'x8'x8' MANHOLE) SEE BC 827.03
KNOCKOUT DETAILS SEE BC 826.05
INSERTS FOR RECESSED EXTENSION SEE BC 826.06
ACCESSORIES FOR PRECAST MANHOLES SEE BC 826.08
STANDARD ACCESS STACK SEE BC 825.11
PRECAST RECESSED EXTENSION SEE BC 826.07-1

SPECIFICATIONS.....LATEST DEPARTMENT OF GENERAL SERVICES
CONCRETE.....f'_c =5,000 PSI-MIX AS APPROVED BY ENGINEER
REINFORCING.....ASTM A615, GRADE 60
WELDED WIRE MESH...ASTM A185
LOADING.....HS 25 TRUCK LOADING

APPROVED:

CHIEF, CONDUIT DIVISION

DIRECTOR, DEPARTMENT OF TRANSPORTATION

CITY OF BALTIMORE
DEPARTMENT OF TRANSPORTATION
CONDUIT DIVISION

ISSUED	REVISED	REVISED
8 / 2010		

PRECAST MANHOLE
6' x 8' x 8' HEADROOM
TOP HALF

STANDARD NO.
BC 827.02-1

SCALE : NONE

SHEET 1 OF 2

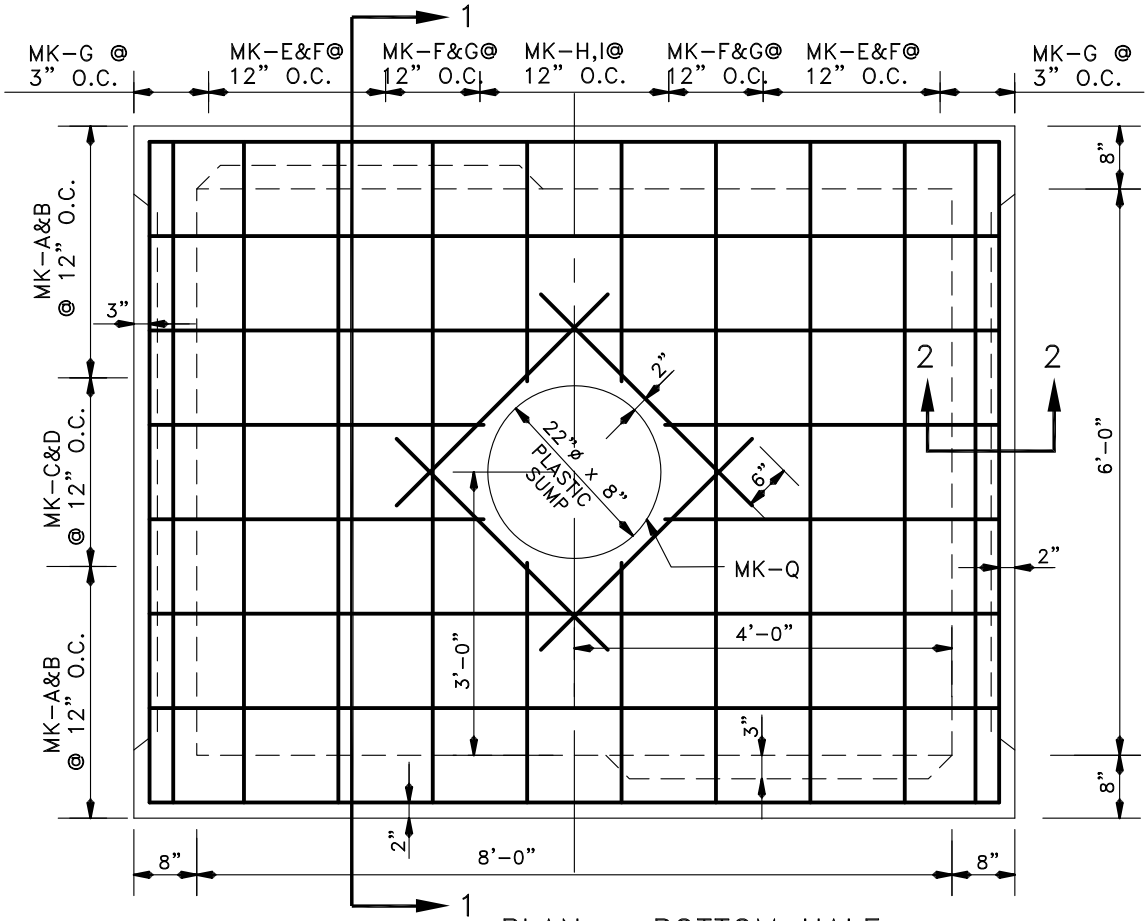

PLAN – BOTTOM HALF

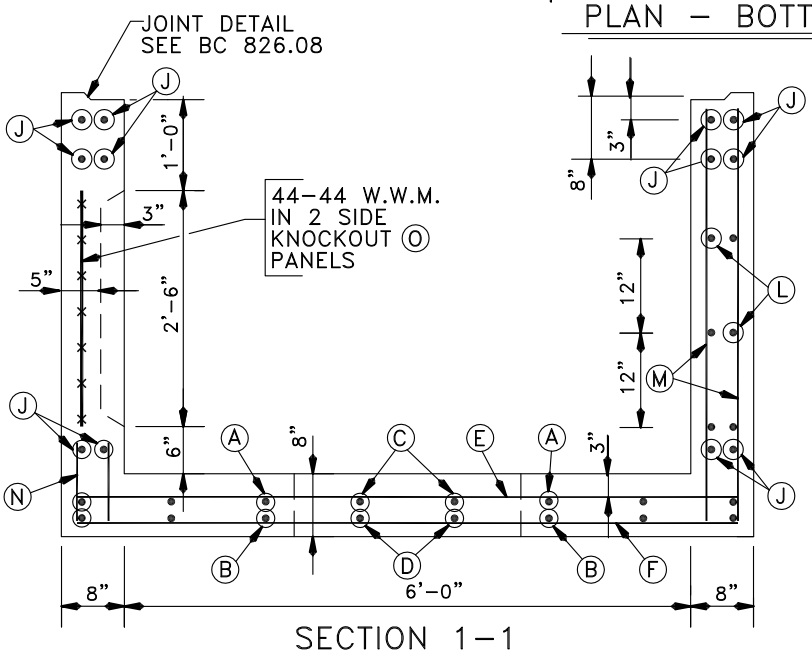

SECTION 1–1

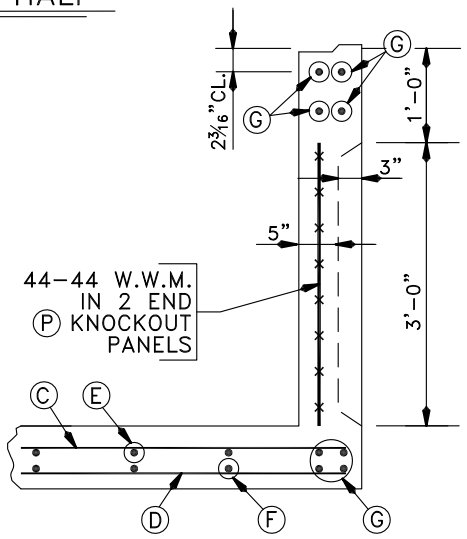

SECTION 2–2

GENERAL NOTES

TOP HALF (6'x8'x8' MANHOLE) SEE BC 827.02–1
BAR SCHEDULE (6'x8'x8' MANHOLE) SEE BC 827.03
KNOCKOUT DETAILS SEE BC 826.05
INSERTS FOR RECESSED EXTENSION SEE BC 826.06
ACCESSORIES FOR PRECAST MANHOLES SEE BC 826.08
STANDARD ACCESS STACK SEE BC 825.11
PRECAST RECESSED EXTENSION SEE BC 826.07–1

SPECIFICATIONS.....LATEST DEPARTMENT OF GENERAL SERVICES
CONCRETE.....f'_c =5,000 PSI–MIX AS APPROVED BY ENGINEER
REINFORCING.....ASTM A615, GRADE 60
WELDED WIRE MESH.....ASTM A185
LOADING.....HS 25 TRUCK LOADING

APPROVED:

CHIEF, CONDUIT DIVISION

DIRECTOR, DEPARTMENT OF TRANSPORTATION

CITY OF BALTIMORE
DEPARTMENT OF TRANSPORTATION
CONDUIT DIVISION

ISSUED	REVISED	REVISED
8 / 2010		

PRECAST MANHOLE
6' x 8' x 8' HEADROOM
BOTTOM HALF

STANDARD NO.
BC 827.02-2

SCALE : NONE | SHEET 2 OF 2

APPROVED:

CHIEF, CONDUIT DIVISION

DIRECTOR, DEPARTMENT OF TRANSPORTATION

CITY OF BALTIMORE
DEPARTMENT OF TRANSPORTATION
CONDUIT DIVISION

PRECAST MANHOLE
6' x 8' x 7' - 8' HR
BAR SCHEDULE

STANDARD NO.
BC 827.03

SCALE : NONE

SHEET 1 OF 1

ISSUED	REVISED	REVISED
8 / 2010		

PRECAST LINE MANHOLE – 6'x8'x7'–8' HR BAR SCHEDULE – TOP HALF

WT. LBS.	MARK	SIZE	NO. REQ'D.	TYPE	A	B	C
245	A	9	8	99	9'–0"		
23	B	6	4	99	3'–9"		
19	C	6	4	99	3'–2"		
26	D	6	6	99	2'–10"		
42	E	6	4	99	7'–0"		
143	F	9	6	99	7'–0"		
17	G	6	4	99	2'–9"		
13	H	6	4	99	2'–2"		
17	I	6	6	99	1'–10"		
39	J	5	8	99	4'–8"		
129	K	7	12	99	9'–0"		
168	M	6	24	99	4'–8"		
②	N	5	16	99	①		
56	O	5	64	99	10"		
19	P	WWM	2	(44–44)	2'–9"		
35	Q	WWM	2	(44–44)	3'–3"		
172	R	7	12	99	7'–0"		

PRECAST LINE MANHOLE – 6'x8'x7'–8' HR BAR SCHEDULE – BOTTOM HALF

WT. LBS.	MARK	SIZE	NO. REQ'D.	TYPE	A	B	C
81	A	6	6	99	9'–0"		
56	B	5	6	99	9'–0"		
21	C	6	4	99	3'–6"		
15	D	5	4	99	3'–6"		
42	E	6	4	99	7'–0"		
73	F	5	6	99	7'–0"		
200	G	7	16	99	7'–0"		
15	H	6	4	99	2'–6"		
10	I	5	4	99	2'–6"		
129	J	7	12	99	9'–0"		
168	L	6	24	99	4'–8"		
②	M	5	16	99	①		
56	N	5	64	99	10"		
19	O	WWM	2	(44–44)	2'–9"		
35	P	WWM	2	(44–44)	3'–3"		
26	Q	5	8	99	7'–0"		

QUANTITIES

MANHOLE SIZE	CONC. C.Y.	STEEL LBS.
6'x8'x7'	10.27	2117
6'x8'x8'	11.23	2133

	7' HR	8' HR
①	3'–10½"	4'–4½"
②	#65	#73

DUCT IDENTIFICATION

I. GENERAL

The following method and associated rules have been established to prevent confusion and inconsistencies in the identification of ducts. This method has been reviewed and found acceptable and satisfactory by Baltimore City and Baltimore Gas and Electric Company.

The following diagram illustrates the proper method to use to count ducts when facing in the indicated direction. It is to be noted that the counting is started from the east duct in the bottom row when facing either north or south, and from the south duct in the bottom row, when facing either east or west.

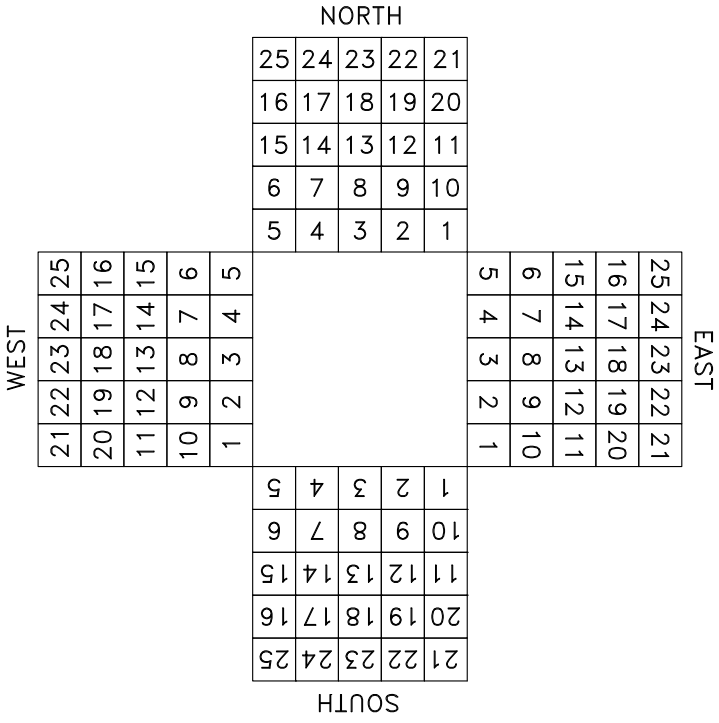

To correctly identify a duct it is necessary to determine the following:

A. The direction of the line.

B. Whether it is a trunk or distribution line.

C. The manhole which each duct group supplies.

CITY OF BALTIMORE 1797	APPROVED: Richard L. Baker CHIEF, CONDUIT DIVISION Khalil Zaied DIRECTOR, DEPARTMENT OF TRANSPORTATION	CITY OF BALTIMORE DEPARTMENT OF TRANSPORTATION CONDUIT DIVISION	ISSUED: 8 / 2010	REVISED / REVISED
		DUCT IDENTIFICATION	STANDARD NO. BC 830.01-1	
			SCALE : NONE	SHEET 1 OF 6

DUCT IDENTIFICATION

II. FACING DIRECTIONS

A. When identifying ducts in an East–West line, the count shall be made facing away from Charles St.

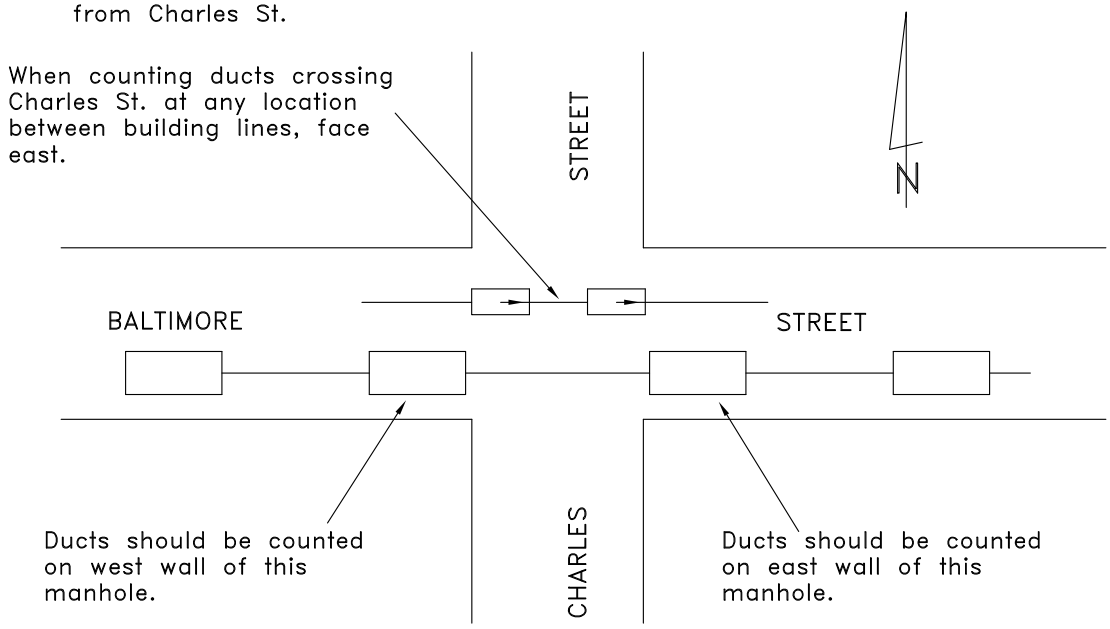

B. When identifying ducts in a North–South line, the count shall be made facing away from Baltimore St.

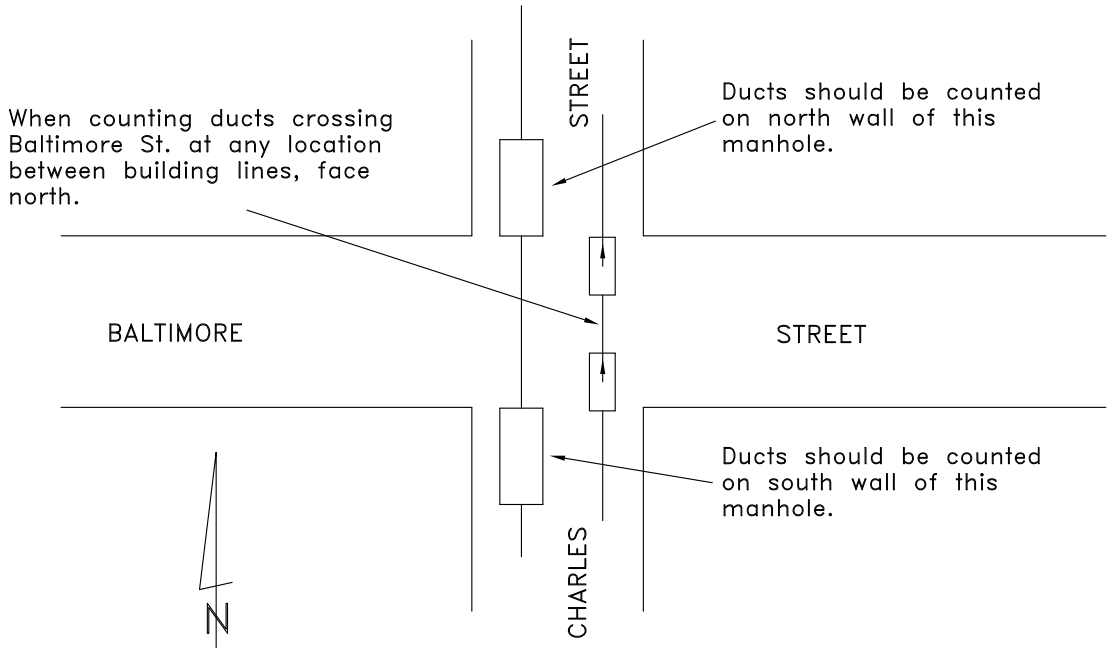

CITY OF BALTIMORE 1797	APPROVED: Rudolph L. Baker, CHIEF, CONDUIT DIVISION; Khalil Zaied, DIRECTOR, DEPARTMENT OF TRANSPORTATION	CITY OF BALTIMORE DEPARTMENT OF TRANSPORTATION CONDUIT DIVISION	ISSUED: 8 / 2010	REVISED / REVISED
		DUCT IDENTIFICATION	STANDARD NO. BC 830.01- 2	
			SCALE : NONE	SHEET 2 OF 6

DUCT IDENTIFICATION

The following example illustrates the need for adhering to the above rules to avoid confusion due to changes in duct formation.

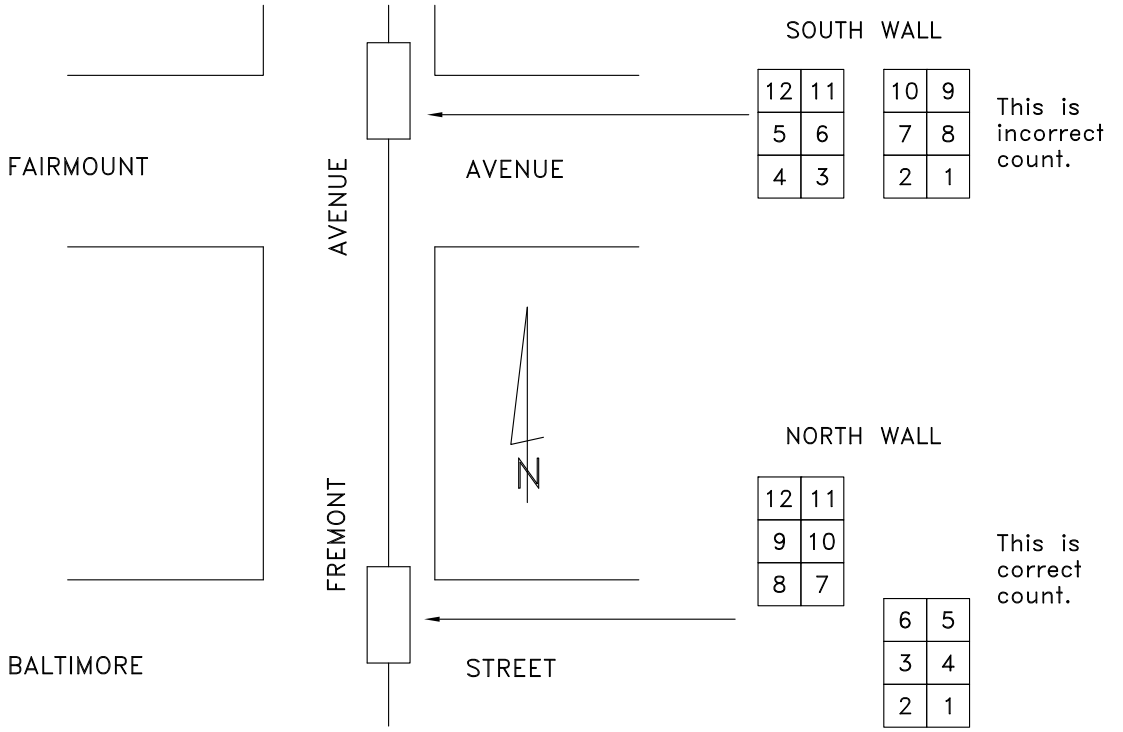

C. When a duct line leaves a manhole on either a north or south wall and enters a connecting manhole on the east or west wall, the general direction of the duct line shall be the deciding factor in determining the duct count.

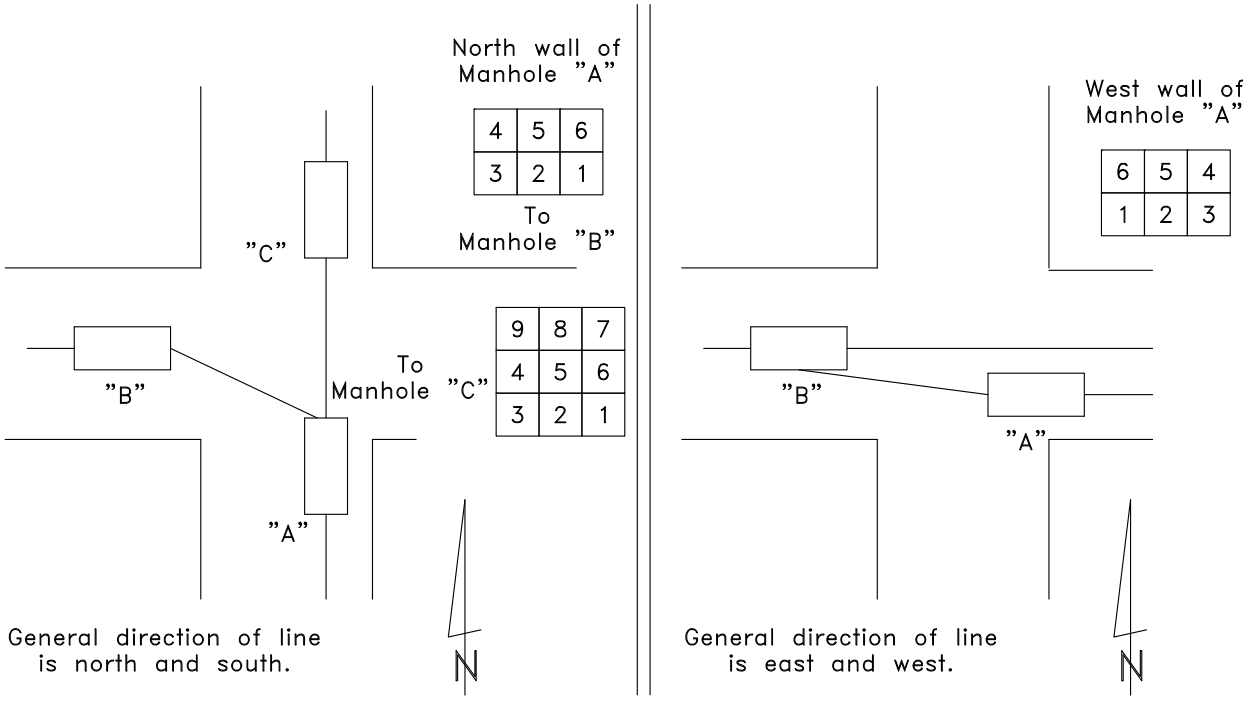

APPROVED: Rudolph L. Baker, CHIEF, CONDUIT DIVISION; Khalil Zaied, DIRECTOR, DEPARTMENT OF TRANSPORTATION	CITY OF BALTIMORE DEPARTMENT OF TRANSPORTATION CONDUIT DIVISION	ISSUED: 8 / 2010	REVISED / REVISED
	DUCT IDENTIFICATION	STANDARD NO. BC 830.01- 3	
		SCALE : NONE	SHEET 3 OF 6

DUCT IDENTIFICATION

III. Grouping

A. When identifying ducts between trunk line manholes, only the ducts connecting directly with other trunk line manholes shall be counted as trunk line ducts.

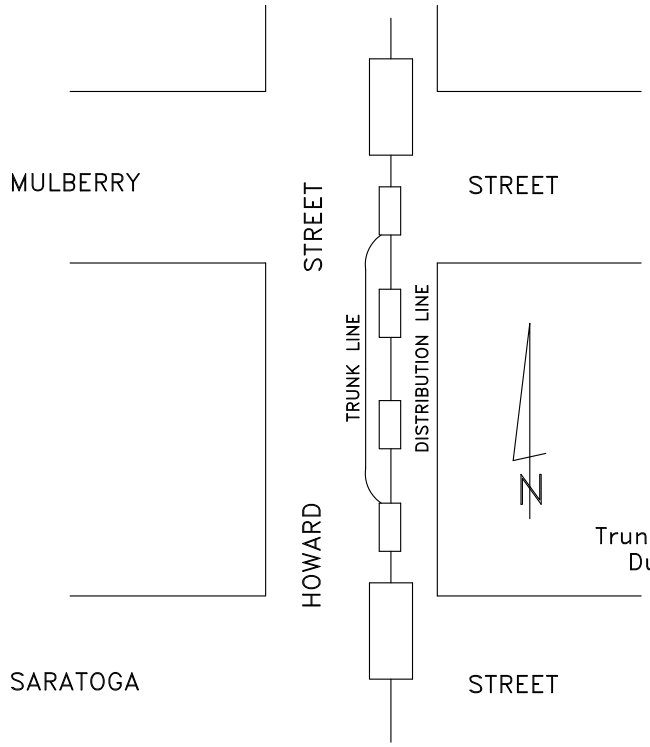

North Wall

Distribution Line Ducts

4	5	6
3	2	1

These ducts should only be counted when following Rule IIIB.

Trunk Line Ducts

12	11
5	6
4	3

10	9
7	8
2	1

These ducts should only be counted when following Rule IIIA.

B. When identifying ducts from a trunk line manhole to a distribution line manhole do not count trunk line ducts. See sketch under A above.

C. If two duct groups leave a manhole on the same wall but connect with different manholes, each group shall be counted separately.

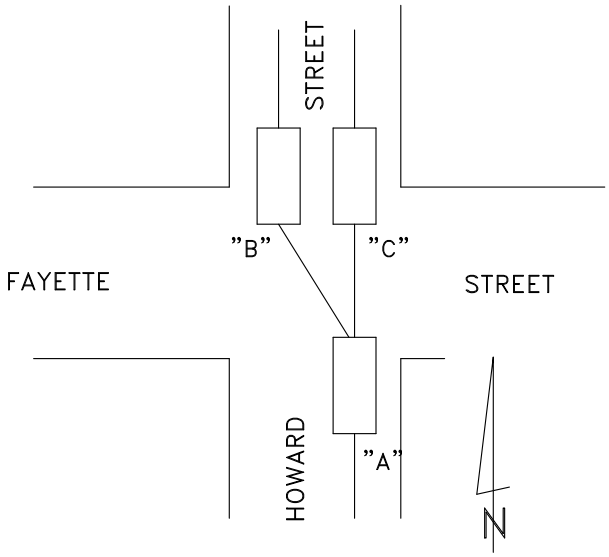

North wall of Manhole "A" To Manhole "B"

4	5	6
3	2	1

9	8	7
4	5	6
3	2	1

To Manhole "C"

APPROVED:

CHIEF, CONDUIT DIVISION

DIRECTOR, DEPARTMENT OF TRANSPORTATION

CITY OF BALTIMORE
DEPARTMENT OF TRANSPORTATION
CONDUIT DIVISION

DUCT IDENTIFICATION

ISSUED	REVISED	REVISED
8 / 2010		

STANDARD NO.
BC 830.01- 4

SCALE : NONE

SHEET 4 OF 6

DUCT IDENTIFICATION

IV. EXAMPLES

The following sketches show various duct arrangements and the proper method to use in identifying ducts in each group.

NORTH WALL

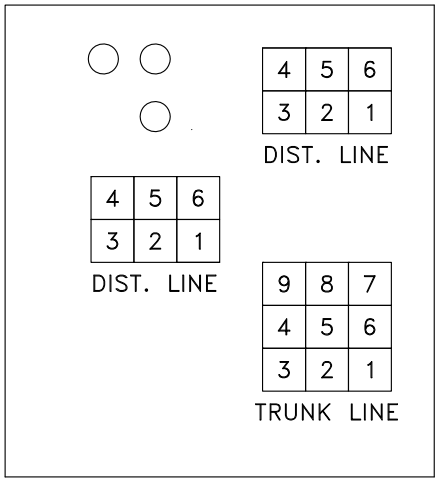

SOUTH WALL

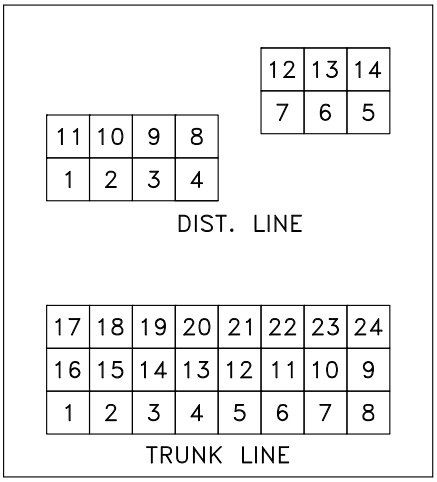

EAST WALL

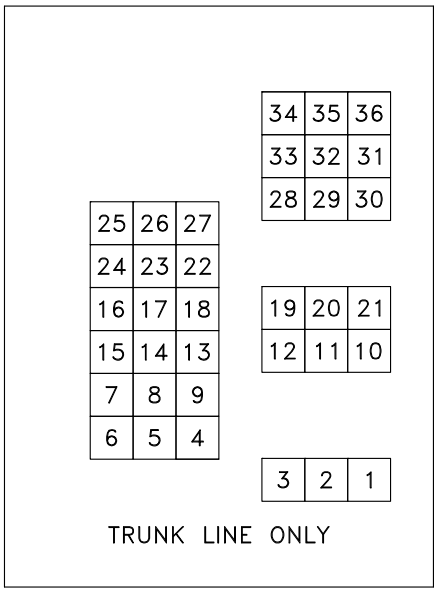

WEST WALL

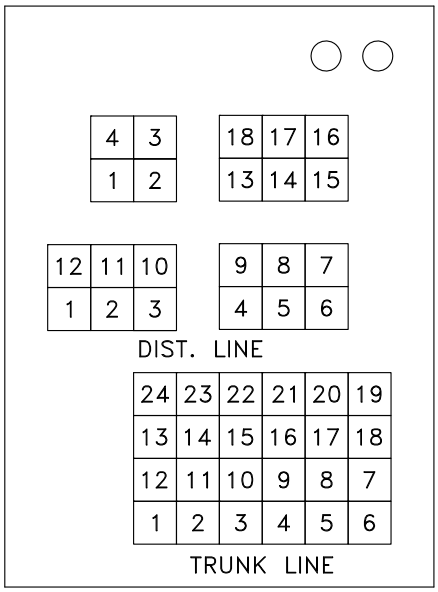

When any portion of a row of ducts in separate duct banks overlap, they are considered in the same plane and are counted as being in a straight line. See below.

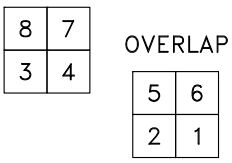

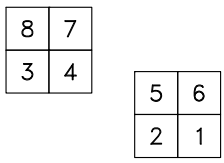

APPROVED:

CHIEF, CONDUIT DIVISION

DIRECTOR, DEPARTMENT OF TRANSPORTATION

CITY OF BALTIMORE
DEPARTMENT OF TRANSPORTATION
CONDUIT DIVISION

DUCT IDENTIFICATION

ISSUED	REVISED	REVISED
8 / 2010		

STANDARD NO.
BC 830.01 - 5

SCALE : NONE

SHEET 5 OF 6

DUCT IDENTIFICATION

V. New Construction

A. The following duct arrangements and identifications shall be maintained whenever an 8 way duct bank is connected to a sidewall recessed extension. (See "A" and "B".)

B. When a concrete street base is involved, ducts shall be transposed to 2W x 4H. (See Figure 1)

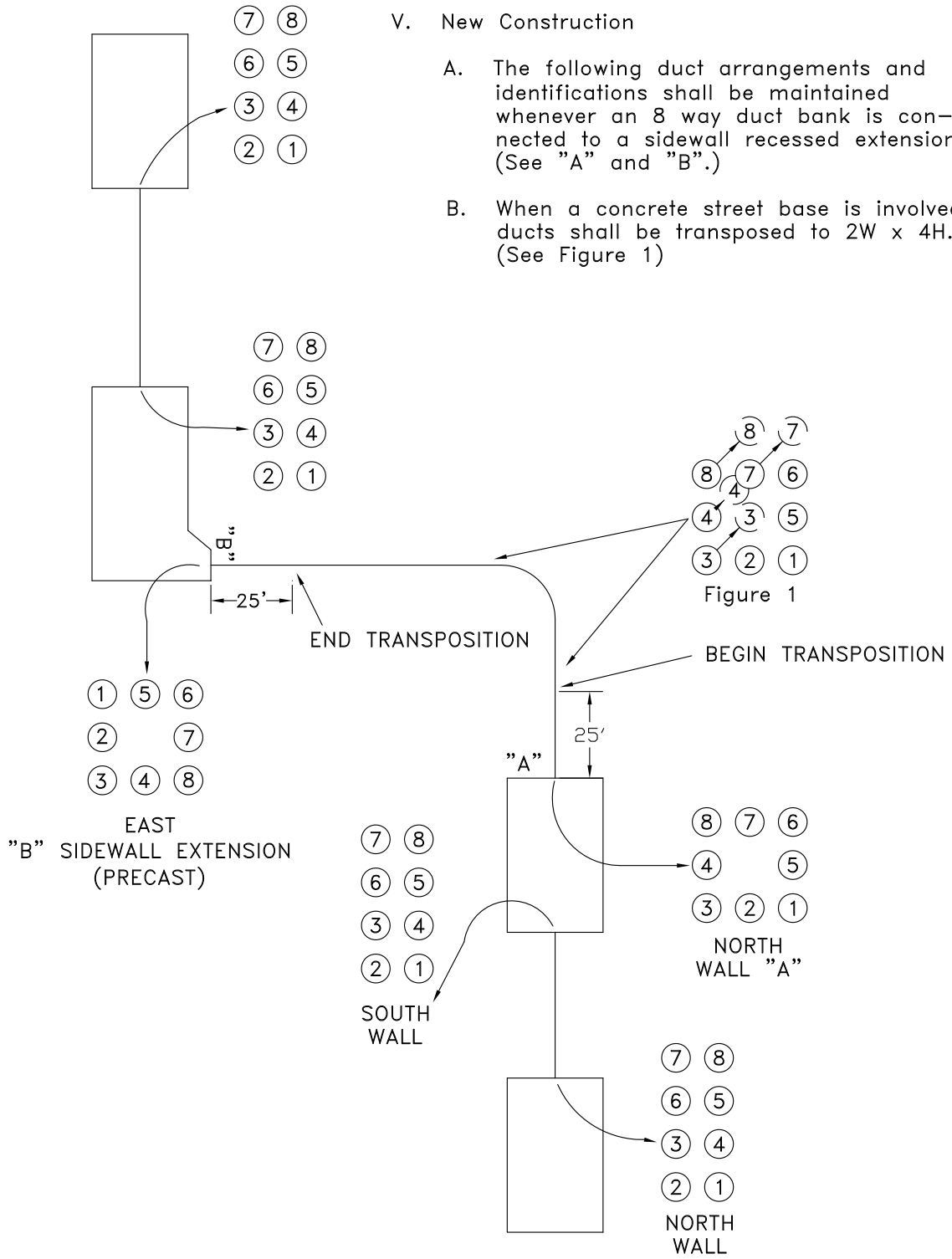

Figure 1

APPROVED: Rudolph L. Baker, CHIEF, CONDUIT DIVISION; Khalil Zaied, DIRECTOR, DEPARTMENT OF TRANSPORTATION	CITY OF BALTIMORE DEPARTMENT OF TRANSPORTATION CONDUIT DIVISION	ISSUED: 8 / 2010	REVISED / REVISED
	DUCT IDENTIFICATION	STANDARD NO. BC 830.01- 6	
		SCALE : NONE	SHEET 6 OF 6

CONDUIT TRANSPOSITION

I. SCOPE
This standard details procedures for installing conduit transpositions.

II. GENERAL
Field conditions at times make it necessary to transpose conduits from one formation to another. Transpositions are usually required when it is impossible for conduit to go over, under or split an obstruction. When large amounts of rock, water, running sand, etc. are encountered excavation depth can be reduced by transposing the conduit. When physically possible, conduits shall be returned to their standard configurations before entering manhole.

III. TRANSPOSITIONS

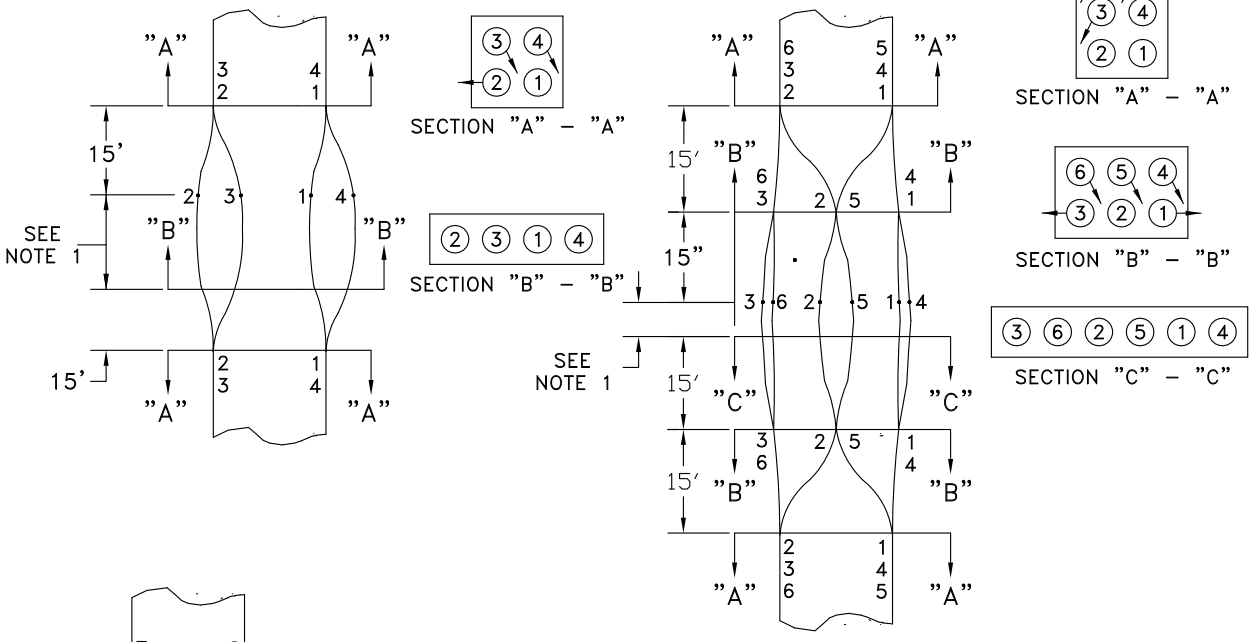

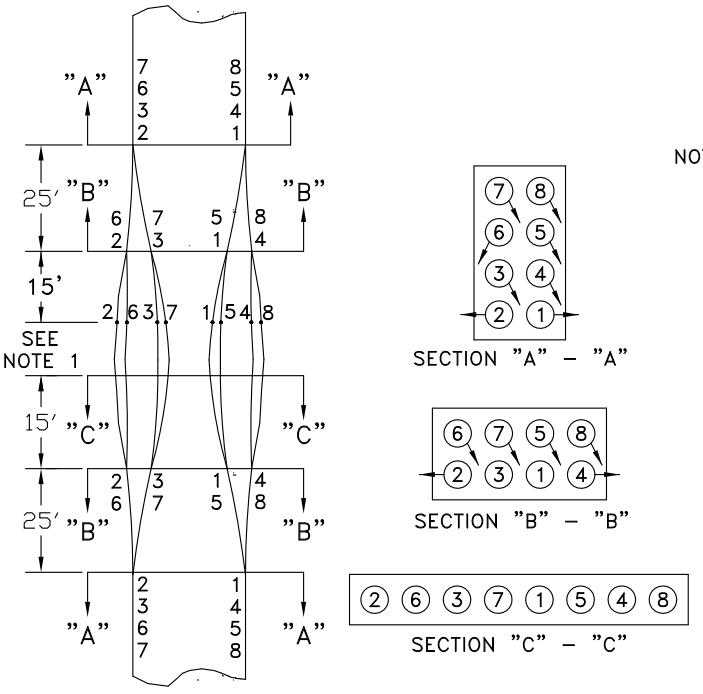

NOTES:

1. Transition area: distance will vary dependent upon circumstance.
2. 2" minimum duct separation, horizontal and vertical shall be maintained.
3. Transpositions shown are one of several options. The relative position of each duct shall be the same on either side of the transition area.

APPROVED:

CHIEF, CONDUIT DIVISION

DIRECTOR, DEPARTMENT OF TRANSPORTATION

CITY OF BALTIMORE
DEPARTMENT OF TRANSPORTATION
CONDUIT DIVISION

ISSUED	REVISED	REVISED
8 / 2010		

CONDUIT TRANSPOSITION

STANDARD NO.
BC 830.02

SCALE : NONE | SHEET 1 OF 1

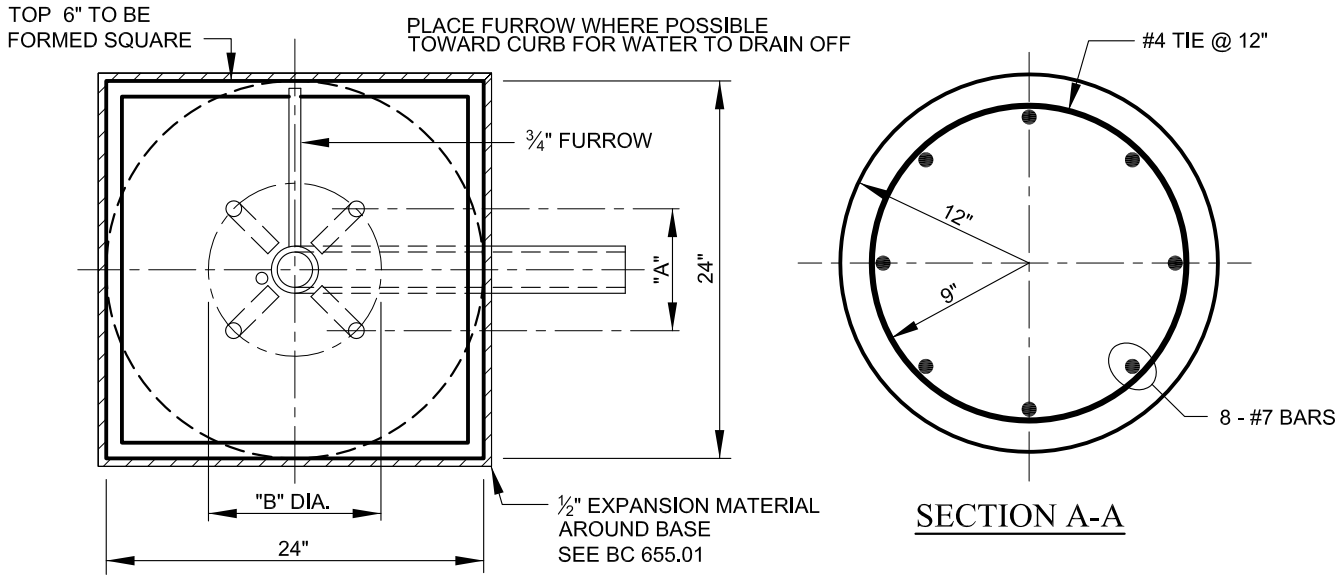

REINFORCING: 7' BASE MUST HAVE 8 - #7 BAR AND 8 - #4 TIES AT 12" C/C

9' BASE MUST HAVE 8 - #7 BAR AND 10 - #4 TIES AT 12" C/C

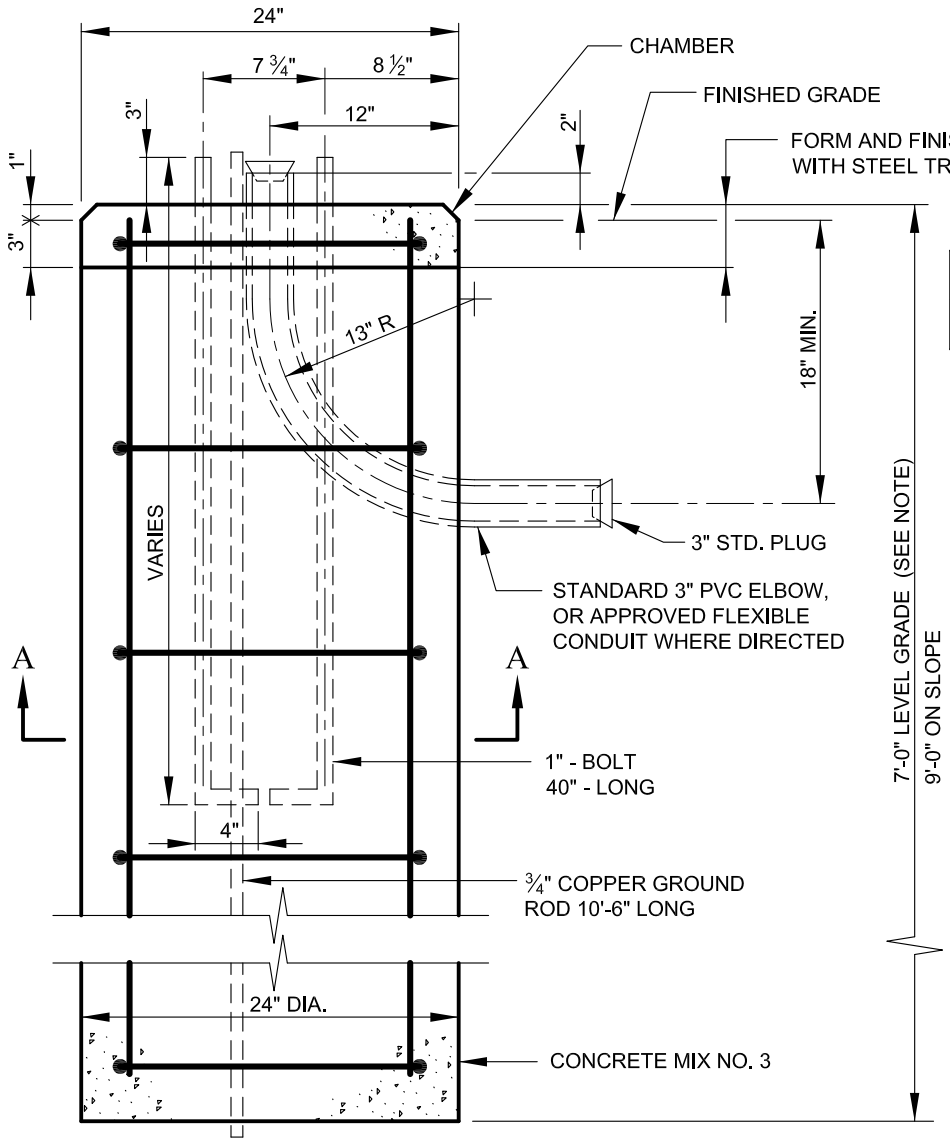

	"A" BOLT SPACE	"B" B0LT CIRCLE DIA.
BUILT IN BALLAST	7 ¾"	11"
REMOTE BALLAST	10 ⅝"	15"

NOTE: 7' BASE FOR MAST ARMS UP TO 15'

9' BASE FOR MAST ARMS 15' AND LONGER

NOTE: POLE TO BE 2'-6" BACK FROM FACE OF CURB UNLESS OTHERWISE NOTED

APPROVED:

DIVISION CHIEF, TRANSPORTATION ENGINEERING AND CONSTRUCTION

DIRECTOR, DEPARTMENT OF TRANSPORTATION

CITY OF BALTIMORE
DEPARTMENT OF TRANSPORTATION
TRANSPORTATION ENGINEERING AND CONSTRUCTION

ISSUED	REVISED	REVISED
8 / 2010		

ROADWAY PEDESTAL BASE FOR LIGHT POLES - AUGURED

STANDARD NO. BC 801.01

SCALE : NONE

SHEET 1 OF 1

Specification – Root Control

1. SCOPE

1.1 This is a materials specification covering root control barrier in trenches, alongside hardscape structures such as sidewalks, curbing, pavements, concrete and building foundations to prevent structural damage due to root penetration. The product functions to provide both a physical and chemical barrier zone to restrict vegetative root encroachment.

1.2 This is a material purchasing specification and design review of its use is recommended.

1. REFERENCED DOCUMENTS

2.1 *ASTM Standards

D–5261	Test Method for Measuring Mass per Unit Area of Geotextiles
D–4632	Test Method for Grab Breaking Load and Elongation of Geotextiles
D–4833	Test Method for Index Puncture Resistance of Geotextiles, Geomembranes and Related Products
D–4533	Test Method for Trapezoid Tear Strength for Geotextiles
D–4491	Test Method for Water Permeability of Geotextiles by Permittivity
D–4751	Test Method for Determining the Apparent Opening Size of a Geotextile
D–4355	Test Method for Deterioration of Geotextiles from Exposure to Ultraviolet Light and Water (Xenon–Arc Type Apparatus)

2.2 *EPA Standards (Reference EPA Label)
Registration No. 59823–1 Attached Exhibit B)

EPA	CG	1500	Water Solubility
EPA	CG	1600	Vapor Pressure

3. PHYSICAL AND CHEMICAL REQUIREMENTS

3.1 Fibers used in the manufacturing of root control barrier substrate fabric shall consist of long chain synthetic polyolefins (at least 95% by weight) and a UV stabilizer. They shall be formed into a stable network such that the filaments or yarns retain their dimensional stability relative to each other.

3.2 Nodules consisting of trifluralin, carbon black and polyethylane compounded in a patented method utilizing time–released characteristics are permanently attached to the substrate fabric on 1½" centers by a through injection molding process.

3.3 All substrate property values, with the exception of apparent opening size (AOS), in these specifications represent minimum average roll values (MARV) in the weakest principal direction (i.e. average test results of any roll in a lot sampled for conformance or quality assurance testing shall meet or exceed the minimum values provided herein). Values for AOS represent maximum average roll values.

3.4 Property values for the trifluralin are average run values.

4. CERTIFICATION

4.1 The Manufacturer shall provide, to the Engineer, a certificate stating the name, product name, style number, chemical composition and other pertinent information to fully describe the product. The Manufacturer is responsible for establishing and maintaining a quality control program to assure compliance with the requirements of the specification. Documentation describing the quality control program shall be made available upon request.

CITY OF BALTIMORE 1797	APPROVED: Richard L. Baker CHIEF, CONDUIT DIVISION Khalil Zaied DIRECTOR, DEPARTMENT OF TRANSPORTATION	CITY OF BALTIMORE DEPARTMENT OF TRANSPORTATION CONDUIT DIVISION	ISSUED	REVISED	REVISED
			8 / 2010		
		TREE ROOT BARRIER FOR TREE PITS	STANDARD NO. BC 893.01- 3		
			SCALE : NONE	SHEET 3 OF 4	

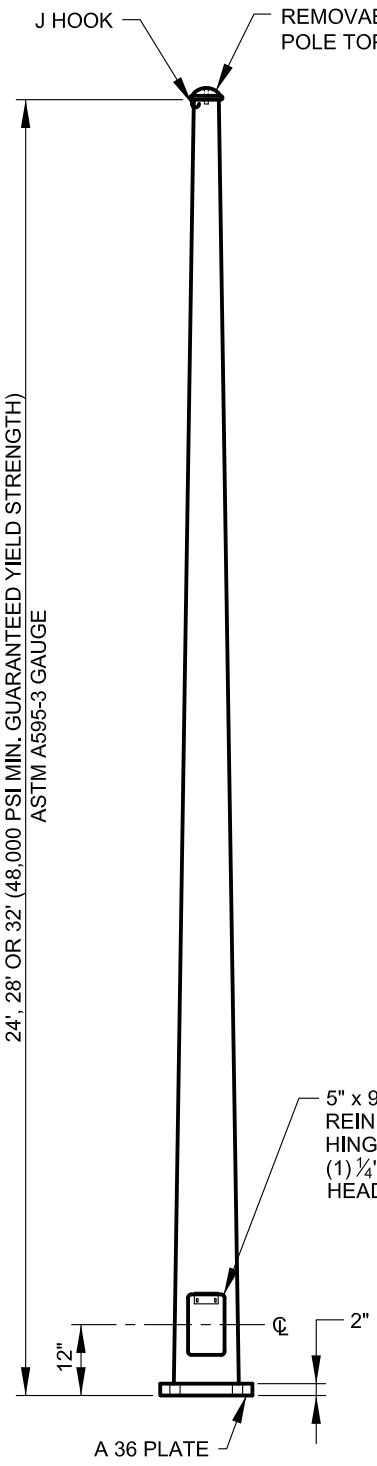

STRAIN POLE

N.T.S.

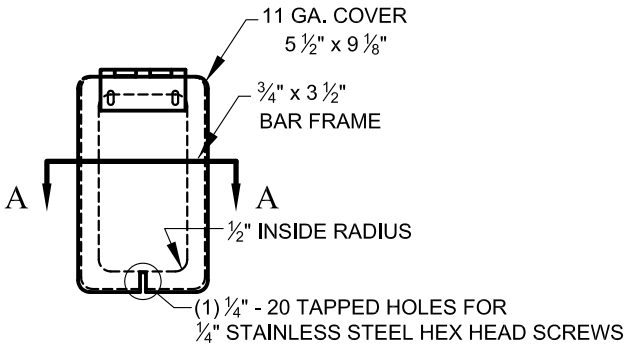

HANDHOLE COVER

SCALE: 1 ½" = 1'-0"

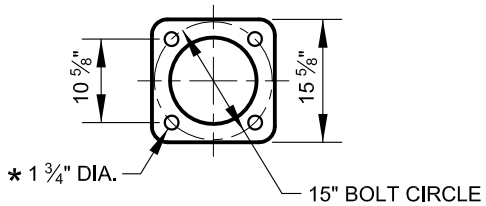

POLE BASE

SCALE: ½" = 1'-0"

* 2" DIA. HOLES ARE REQUIRED FOR 32' STRAIN POLE

A POLE GROUNDING LUG SHALL BE PROVIDED AT THE HANDHOLE

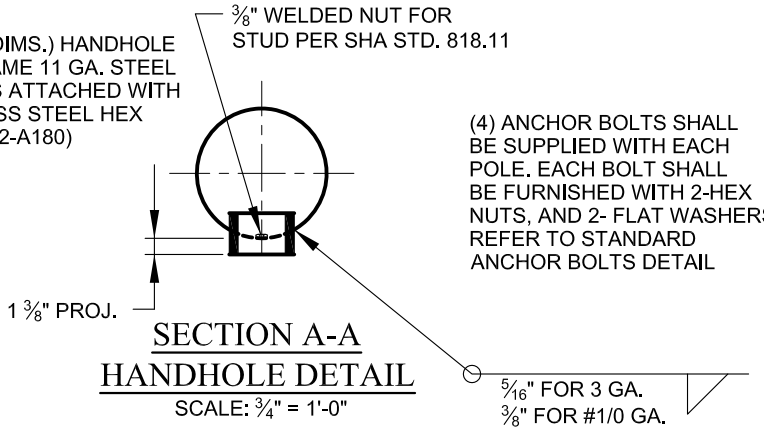

SECTION A-A
HANDHOLE DETAIL

SCALE: ¾" = 1'-0"

POLE SHAFT DIMENSION SCHEDULE		
HEIGHT	BASE O.D.	TOP O.D.
24 FEET	10.00"	6.64"
28 FEET	11.00"	7.08"
32 FEET	11.00"	6.52"

APPROVED:

DIVISION CHIEF, TRANSPORTATION ENGINEERING AND CONSTRUCTION

DIRECTOR, DEPARTMENT OF TRANSPORTATION

CITY OF BALTIMORE
DEPARTMENT OF TRANSPORTATION
TRANSPORTATION ENGINEERING AND CONSTRUCTION

ISSUED	REVISED	REVISED
8 / 2010		

STEEL STRAIN POLE

STANDARD NO.
BC 880.01

SCALE : NONE | SHEET 1 OF 1

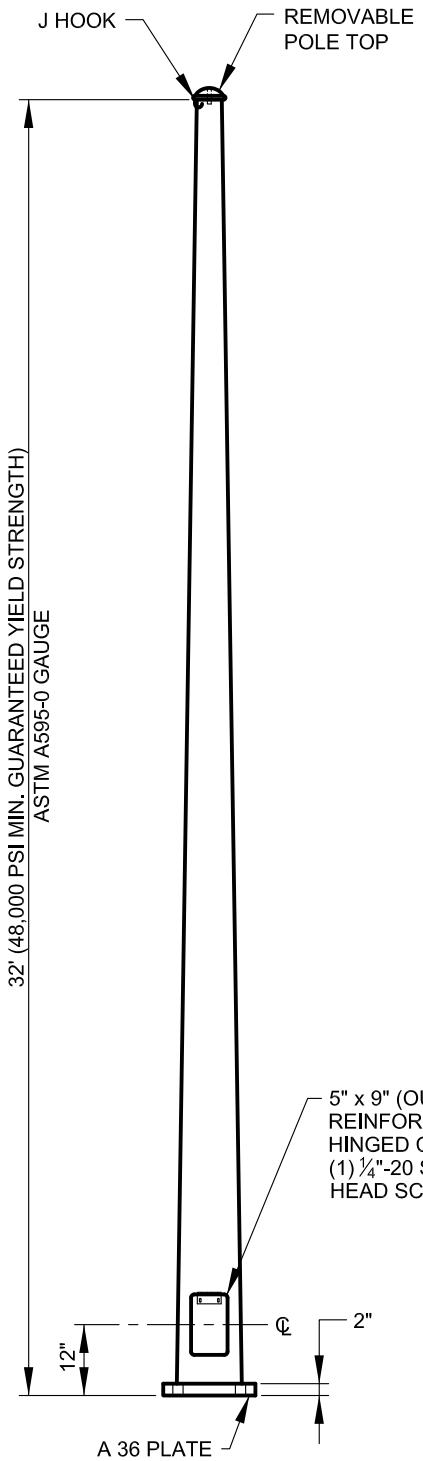

HEAVY DUTY STRAIN POLE

N.T.S.

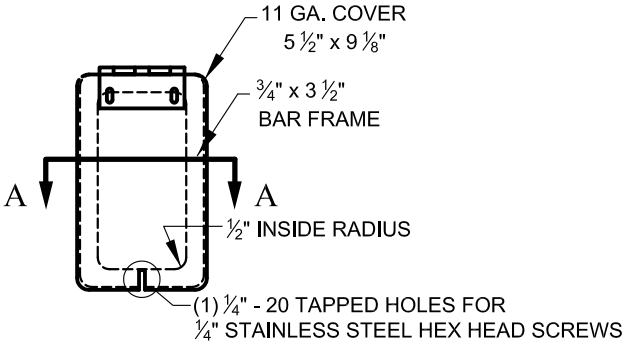

HANDHOLE COVER

SCALE: 1 ½" = 1'-0"

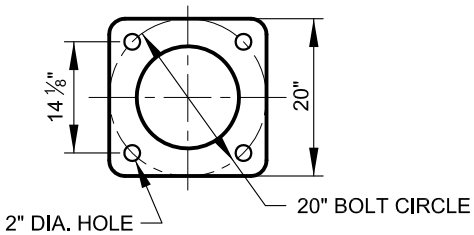

POLE BASE

SCALE: ½" = 1'-0"

A POLE GROUNDING LUG SHALL BE PROVIDED AT THE HANDHOLE

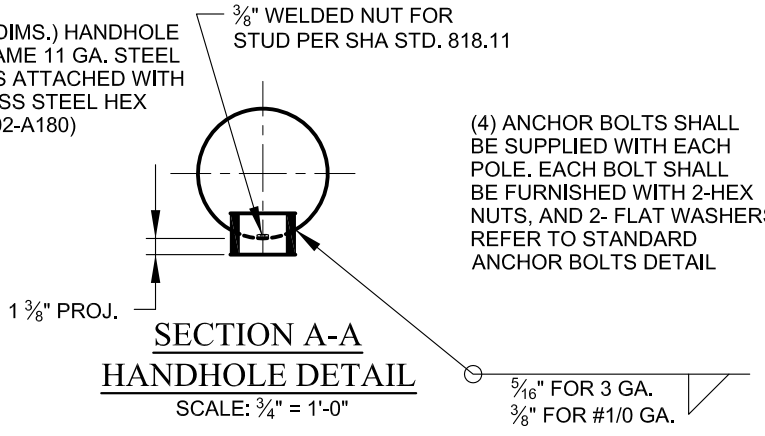

SECTION A-A
HANDHOLE DETAIL

SCALE: ¾" = 1'-0"

POLE SHAFT DIMENSION SCHEDULE		
HEIGHT	BASE O.D.	TOP O.D.
32 FEET	13.00"	8.52"

APPROVED:

DIVISION CHIEF, TRANSPORTATION ENGINEERING AND CONSTRUCTION

DIRECTOR, DEPARTMENT OF TRANSPORTATION

CITY OF BALTIMORE
DEPARTMENT OF TRANSPORTATION
TRANSPORTATION ENGINEERING AND CONSTRUCTION

ISSUED	REVISED	REVISED
8 / 2010		

HEAVY DUTY STEEL STRAIN POLE

STANDARD NO. BC 880.02

SCALE : NONE

SHEET 1 OF 1

POLE SHAFT DIMENSION SCHEDULE		
HEIGHT	BASE O.D.	TOP O.D.
28 FEET	11.00"	7.08"
32 FEET	11.00"	6.52"

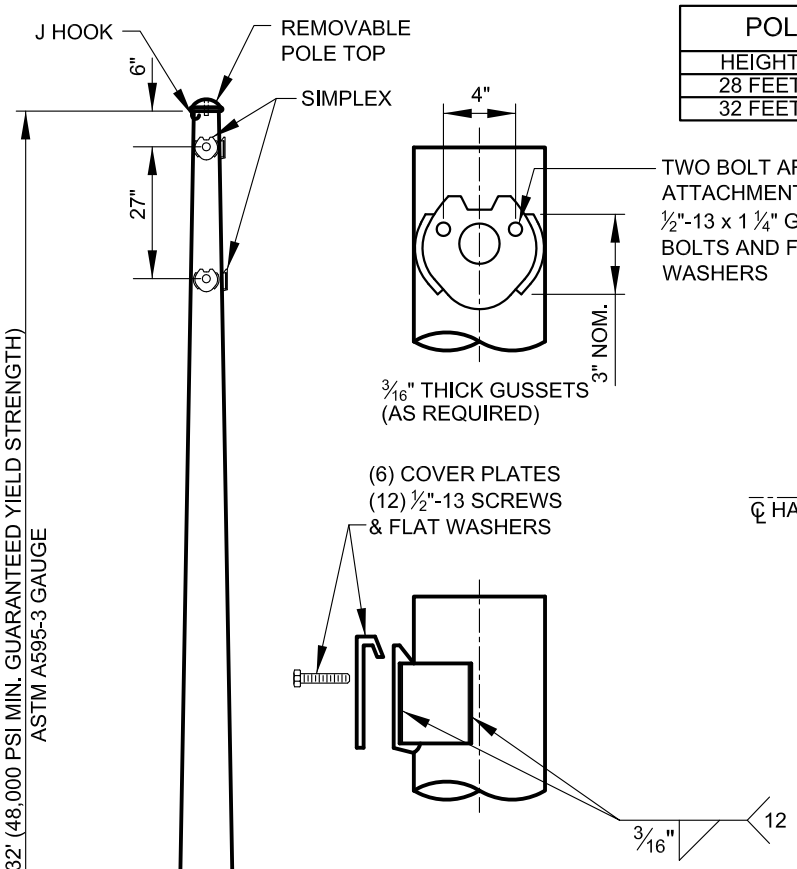

SIMPLEX DETAILS
N.T.S.

ARM LOCATION DETAIL
N.T.S.

STRAIN POLE
N.T.S.

NOTES:

1. THREE SETS OF DOUBLE BOLT POLE SIMPLEX FITTINGS SHALL BE LOCATED AT 90°, 180°, AND 270° CLOCKWISE FROM HANDHOLE ON 28' AND 32' STRAIN POLES.
2. SIMPLEX FITTINGS ARE NOT REQUIRED ON 24' STRAIN POLES.
3. A COVER PLATE SHALL BE SUPPLIED FOR ALL SIMPLEX FITTINGS.
4. A POLE GROUNDING LUG SHALL BE PROVIDED AT THE HANDHOLE.

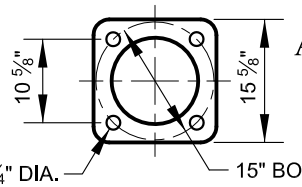

* 2" DIA. HOLES ARE REQUIRED FOR 32' STRAIN POLE

POLE BASE
SCALE: ½" = 1'-0"

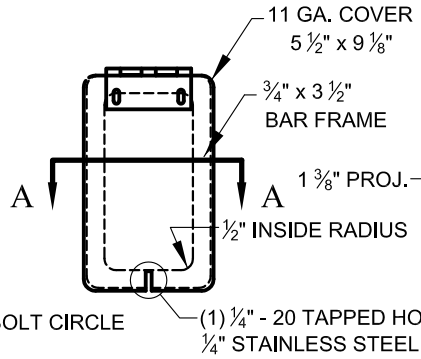

HANDHOLE COVER
SCALE: 1 ½" = 1'-0"

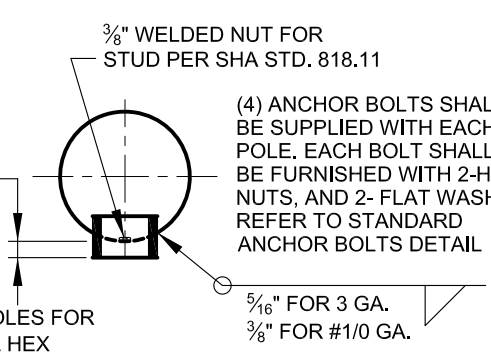

SECTION A-A
HANDHOLE DETAIL
SCALE: ¾" = 1'-0"

APPROVED:

DIVISION CHIEF, TRANSPORTATION ENGINEERING AND CONSTRUCTION

DIRECTOR, DEPARTMENT OF TRANSPORTATION

CITY OF BALTIMORE
DEPARTMENT OF TRANSPORTATION
TRANSPORTATION ENGINEERING AND CONSTRUCTION

ISSUED	REVISED	REVISED
8 / 2010		

JOINT USE
STEEL STRAIN POLE

STANDARD NO.
BC 880.03

SCALE : NONE | SHEET 1 OF 1

POLE SHAFT DIMENSION SCHEDULE		
HEIGHT	BASE O.D.	TOP O.D.
32 FEET	13.00"	8.52"

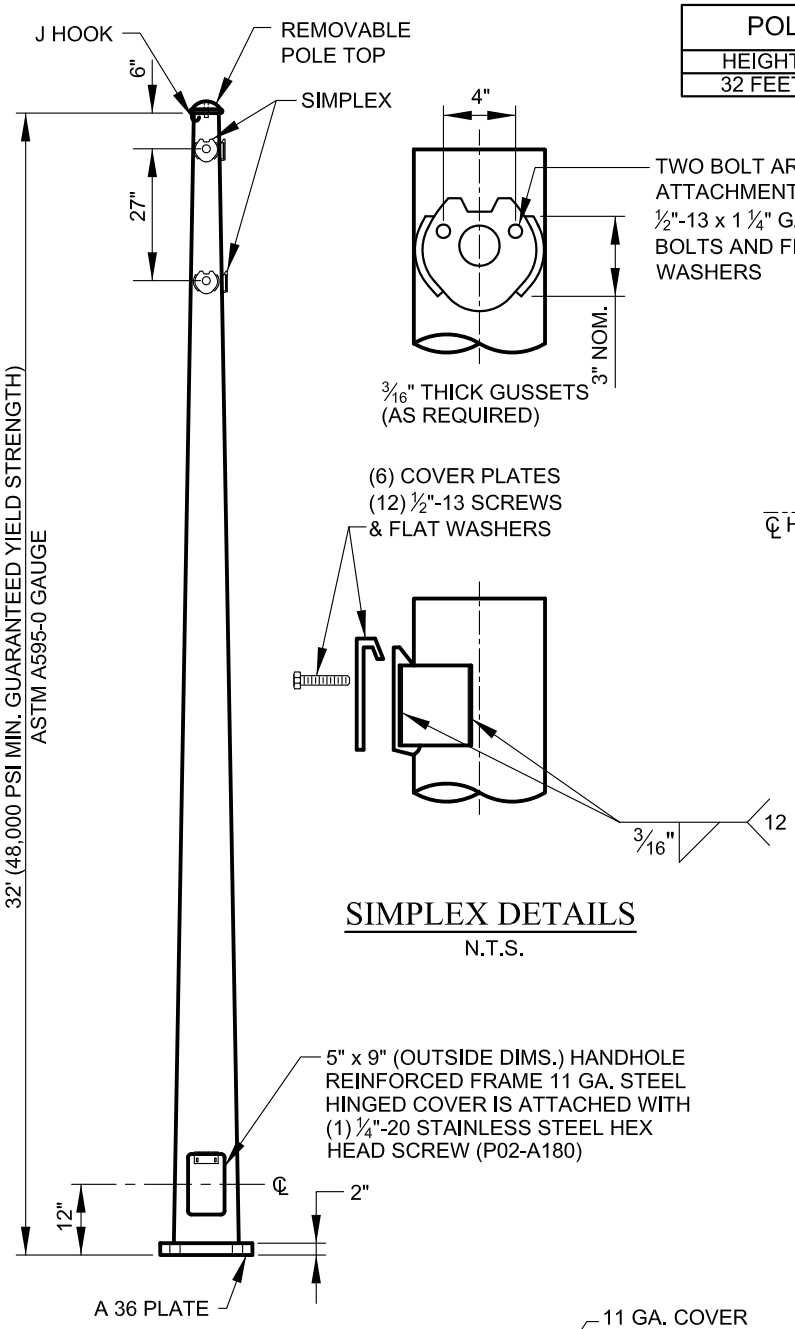

STRAIN POLE
N.T.S.

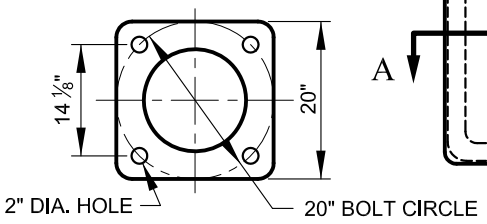

POLE BASE
SCALE: ½" = 1'-0"

SIMPLEX DETAILS
N.T.S.

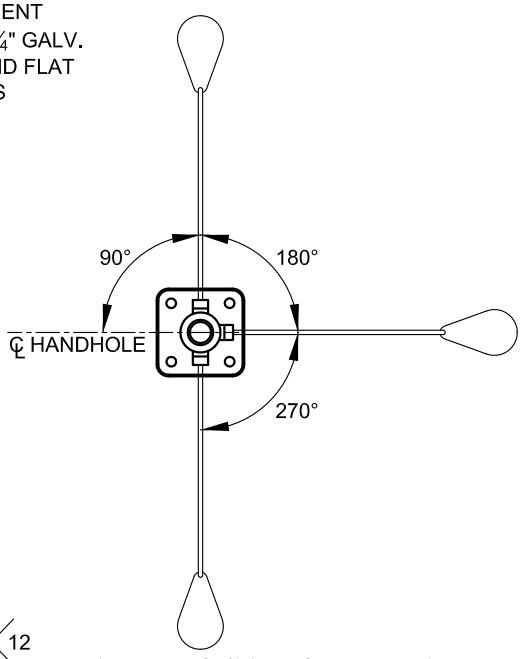

ARM LOCATION DETAIL
N.T.S.

NOTES:

1. THREE SETS OF DOUBLE BOLT POLE SIMPLEX FITTINGS SHALL BE LOCATED AT 90°, 180°, AND 270° CLOCKWISE FROM HANDHOLE ON 28' AND 32' STRAIN POLES.
2. SIMPLEX FITTINGS ARE NOT REQUIRED ON 24' STRAIN POLES.
3. A COVER PLATE SHALL BE SUPPLIED FOR ALL SIMPLEX FITTINGS.
4. A POLE GROUNDING LUG SHALL BE PROVIDED AT THE HANDHOLE.

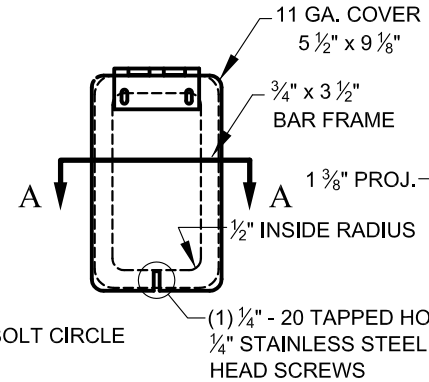

HANDHOLE COVER
SCALE: 1 ½" = 1'-0"

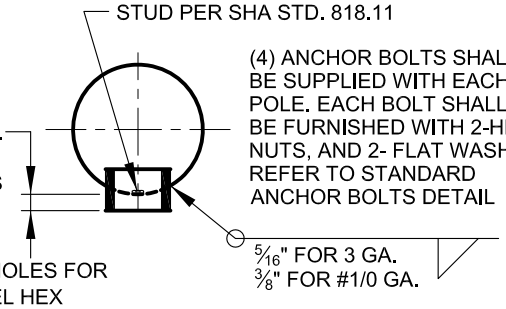

SECTION A-A
HANDHOLE DETAIL
SCALE: ¾" = 1'-0"

APPROVED:

DIVISION CHIEF, TRANSPORTATION ENGINEERING AND CONSTRUCTION

DIRECTOR, DEPARTMENT OF TRANSPORTATION

CITY OF BALTIMORE
DEPARTMENT OF TRANSPORTATION
TRANSPORTATION ENGINEERING AND CONSTRUCTION

ISSUED	REVISED	REVISED
8 / 2010		

HEAVY DUTY JOINT USE STEEL STRAIN POLE

STANDARD NO. BC 880.04

SCALE : NONE

SHEET 1 OF 1

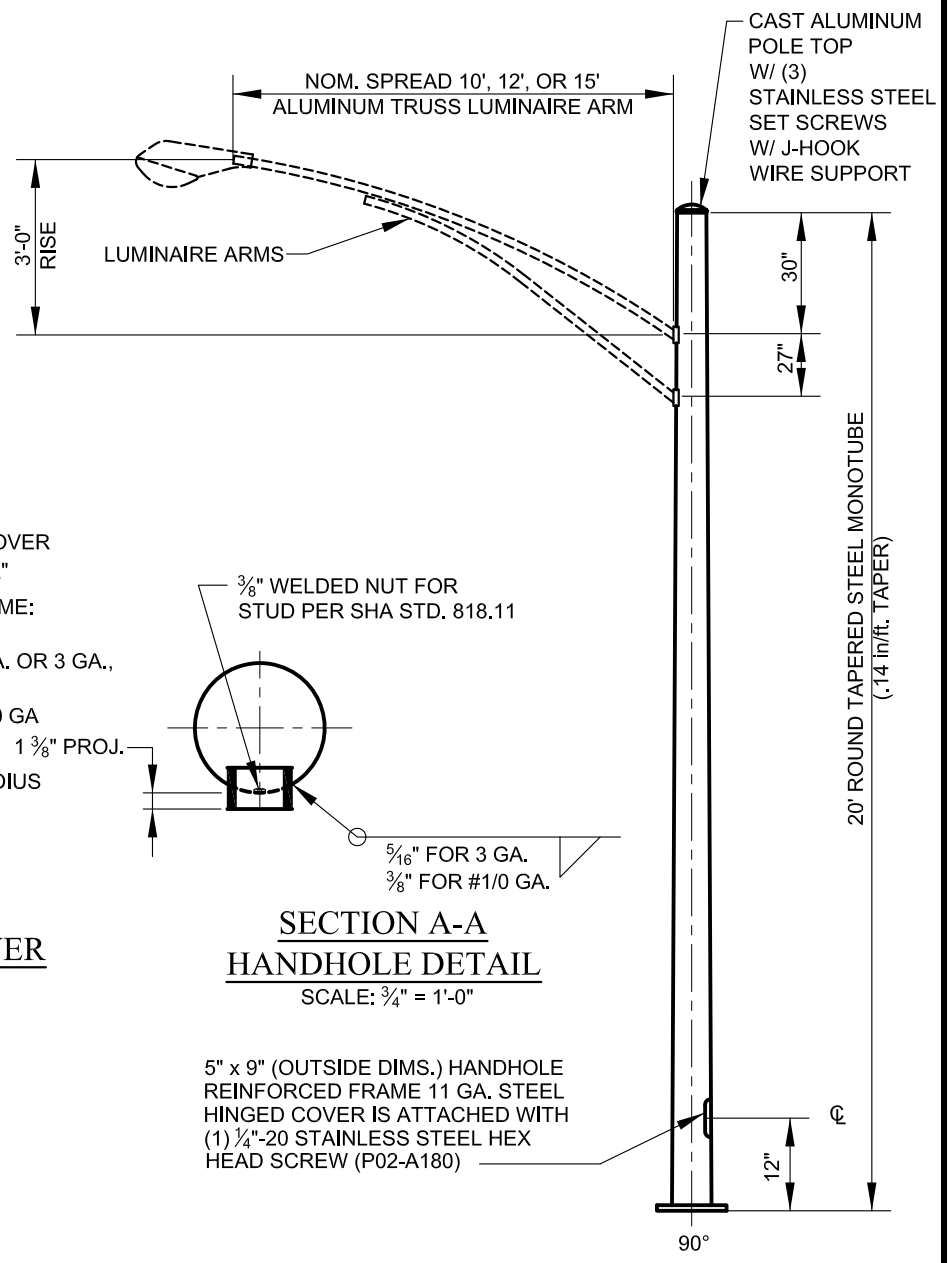

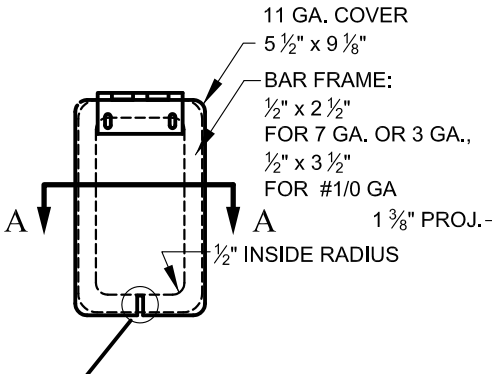

HANDHOLE COVER
SCALE: 1 ½" = 1'-0"

SECTION A-A
HANDHOLE DETAIL
SCALE: ¾" = 1'-0"

5" x 9" (OUTSIDE DIMS.) HANDHOLE REINFORCED FRAME 11 GA. STEEL HINGED COVER IS ATTACHED WITH (1) ¼"-20 STAINLESS STEEL HEX HEAD SCREW (P02-A180)

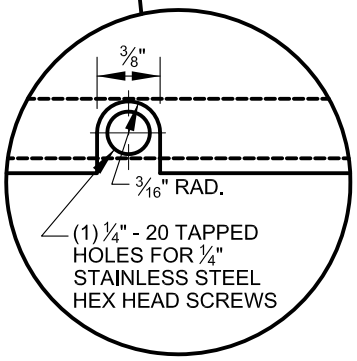

ENLARGED DETAIL

A POLE GROUNDING LUG SHALL BE PROVIDED AT THE HANDHOLE.

POLE SHAFT DIMENSION SCHEDULE		
HEIGHT	BASE O.D.	TOP O.D.
20 FEET	9.00"	6.20"

* 2" DIA. HOLES ARE REQUIRED FOR 32' STRAIN POLE

APPROVED:

DIVISION CHIEF, TRANSPORTATION ENGINEERING AND CONSTRUCTION

DIRECTOR, DEPARTMENT OF TRANSPORTATION

CITY OF BALTIMORE
DEPARTMENT OF TRANSPORTATION
TRANSPORTATION ENGINEERING AND CONSTRUCTION

ISSUED	REVISED	REVISED
8 / 2010		

MULTI-PURPOSE POLE

STANDARD NO.
BC 880.05-1

SCALE : NONE

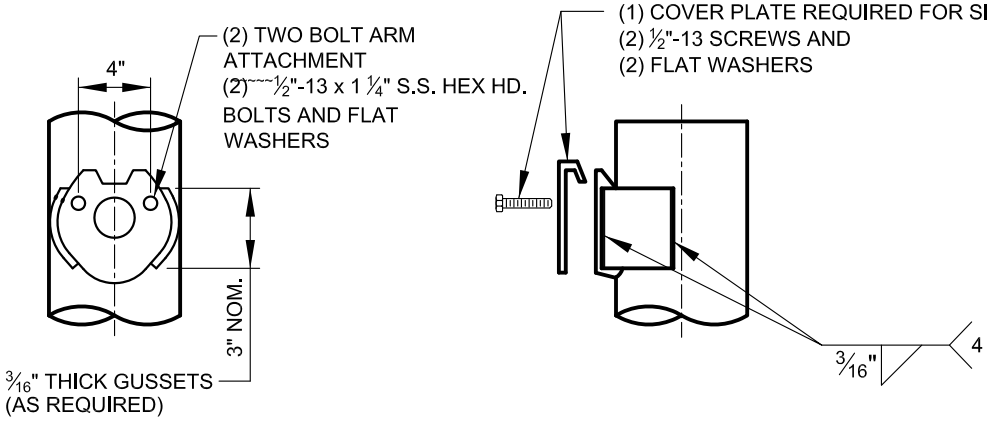

LUMINAIRE ARM CONNECTION DETAIL

(2) SIMPLEXES

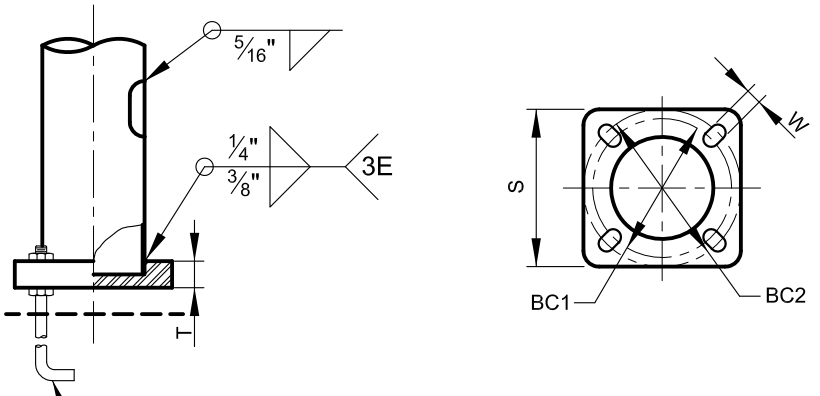

(4) ANCHOR BOLTS SHALL BE SUPPLIED WITH EACH POLE. EACH BOLT SHALL BE FURNISHED WITH 2-HEX NUTS, AND 2- FLAT WASHERS
REFER TO STANDARD ANCHOR BOLTS DETAIL

BASE PLATE DETAIL

N.T.S.

BASE PLATE DIMENSION SCHEDULE				
BC1	BC2	W	S	T
12 ½"	15"	1 ¾"	15 ⅝"	1 ¾"

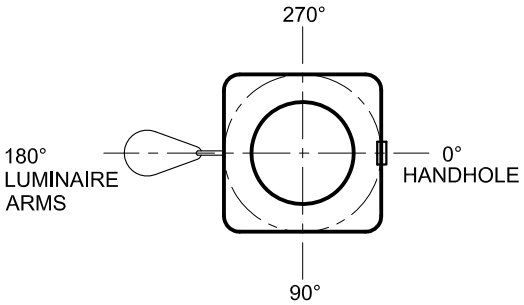

ORIENTATION VIEW

N.T.S.

APPROVED:

DIVISION CHIEF, TRANSPORTATION ENGINEERING AND CONSTRUCTION

DIRECTOR, DEPARTMENT OF TRANSPORTATION

CITY OF BALTIMORE
DEPARTMENT OF TRANSPORTATION
TRANSPORTATION ENGINEERING AND CONSTRUCTION

ISSUED	REVISED	REVISED
8 / 2010		

MULTI-PURPOSE POLE

STANDARD NO.
BC 880.05-2

SCALE : NONE

SHEET 2 OF 2

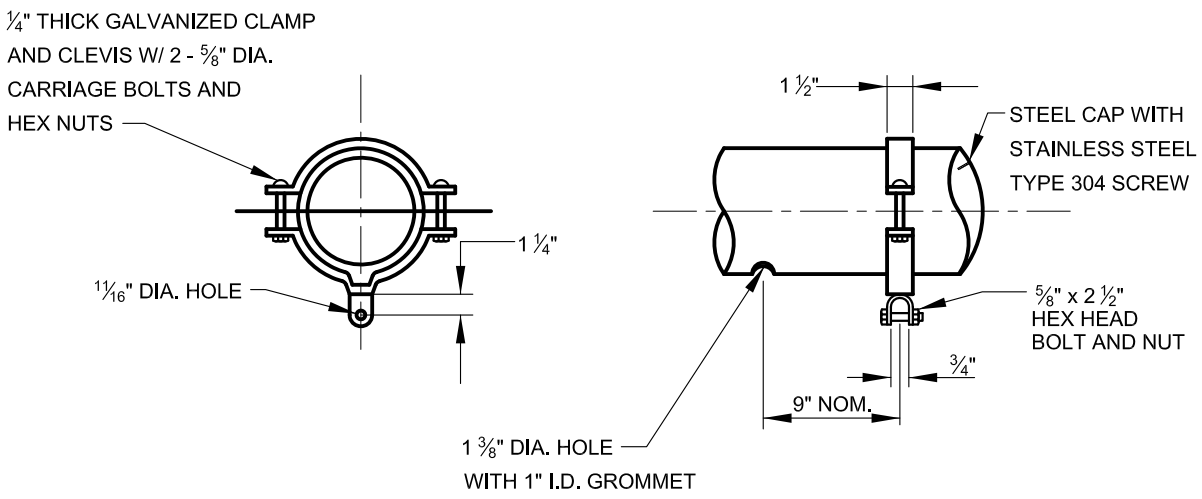

SIGNAL HANGER DETAIL "B"
TYP. @ EACH SIGNAL LOCATION

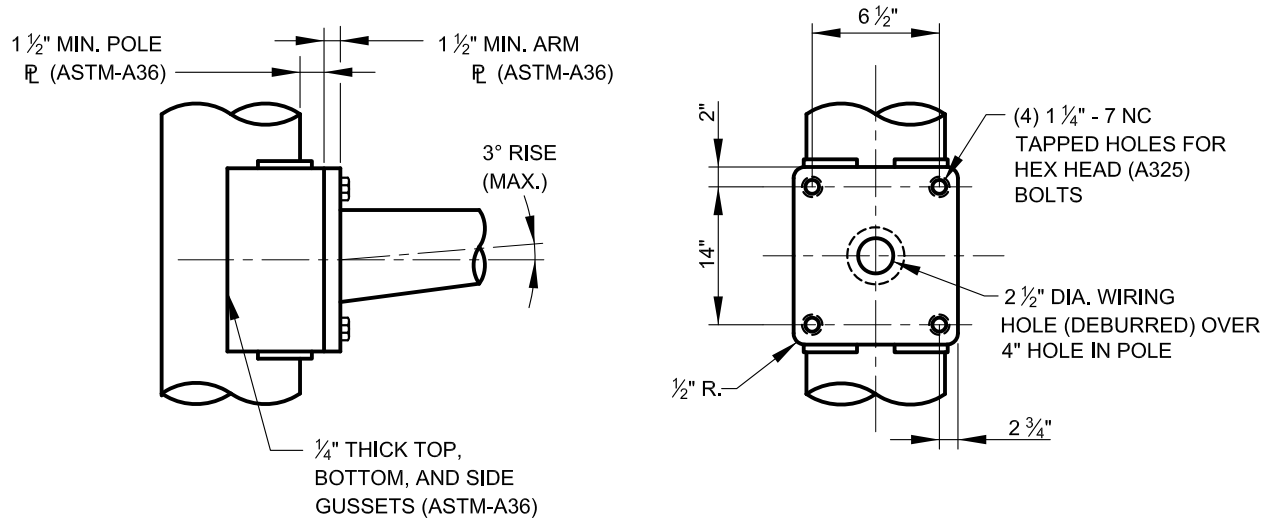

SIGNAL ARM ATTACHMENT DETAIL

APPROVED:

DIVISION CHIEF, TRANSPORTATION ENGINEERING AND CONSTRUCTION

DIRECTOR, DEPARTMENT OF TRANSPORTATION

CITY OF BALTIMORE
DEPARTMENT OF TRANSPORTATION
TRANSPORTATION ENGINEERING AND CONSTRUCTION

ISSUED	REVISED	REVISED
8 / 2010		

GALVANIZED STEEL MAST ARM POLE

STANDARD NO.
BC 880.06-2

SCALE : NONE

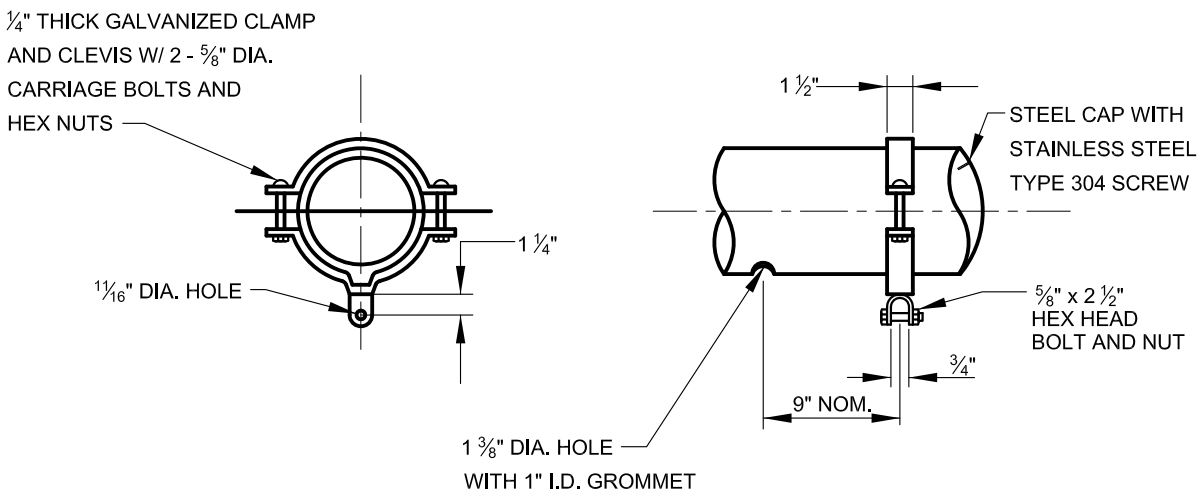

SIGNAL HANGER DETAIL "B"
TYP. @ EACH SIGNAL LOCATION

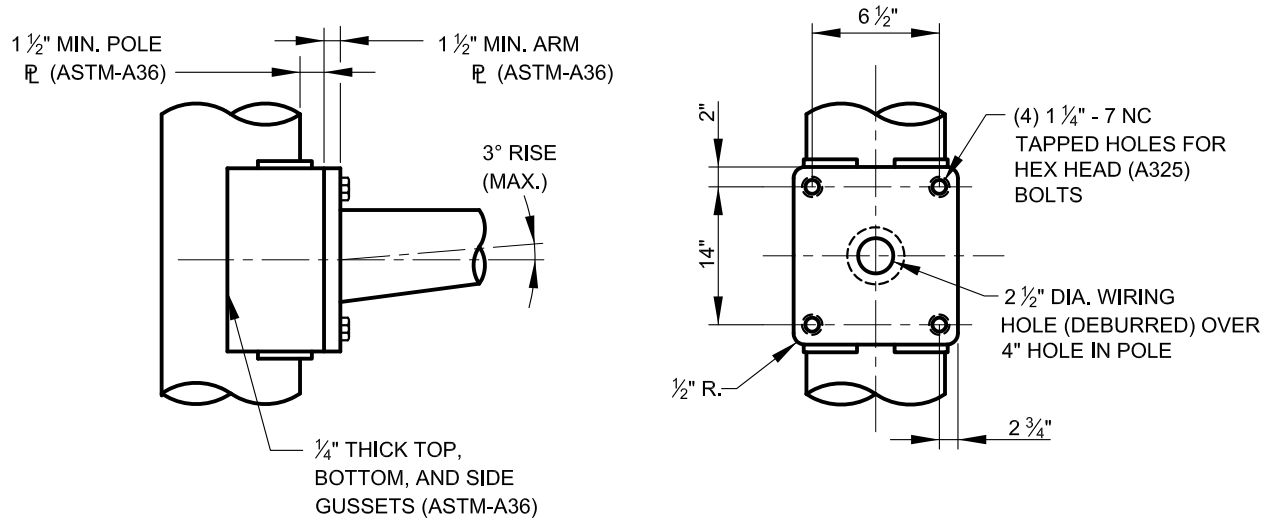

SIGNAL ARM ATTACHMENT DETAIL

APPROVED:

DIVISION CHIEF, TRANSPORTATION ENGINEERING AND CONSTRUCTION

DIRECTOR, DEPARTMENT OF TRANSPORTATION

CITY OF BALTIMORE
DEPARTMENT OF TRANSPORTATION
TRANSPORTATION ENGINEERING AND CONSTRUCTION

ISSUED	REVISED	REVISED
8 / 2010		

GALVANIZED STEEL MAST ARM POLE

STANDARD NO.
BC 880.06-2

SCALE : NONE

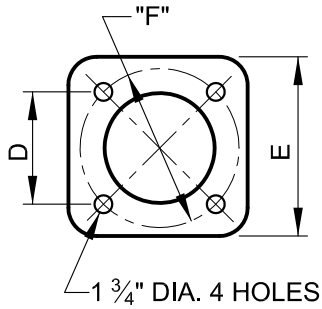

BASE PLATE DETAIL

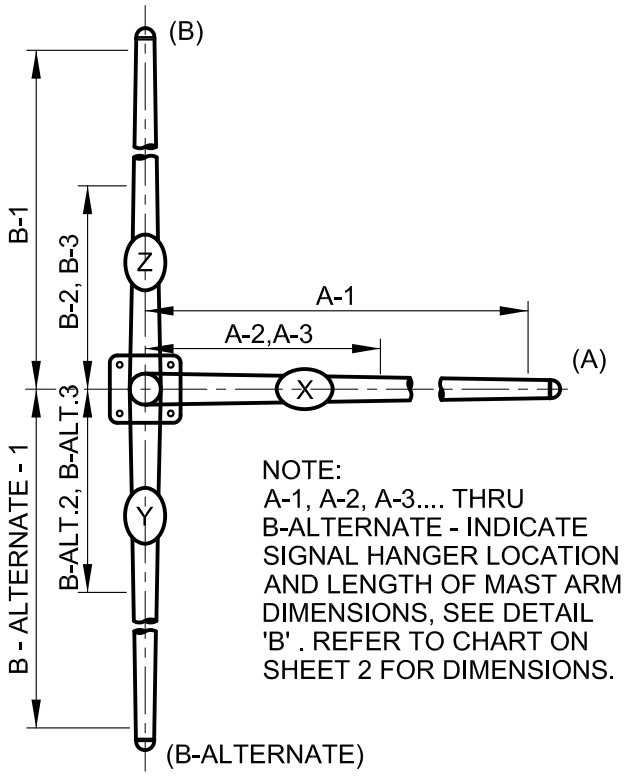

NOTE:
A-1, A-2, A-3.... THRU B-ALTERNATE - INDICATE SIGNAL HANGER LOCATION AND LENGTH OF MAST ARM DIMENSIONS, SEE DETAIL 'B' . REFER TO CHART ON SHEET 2 FOR DIMENSIONS.

MAST ARM DETAIL

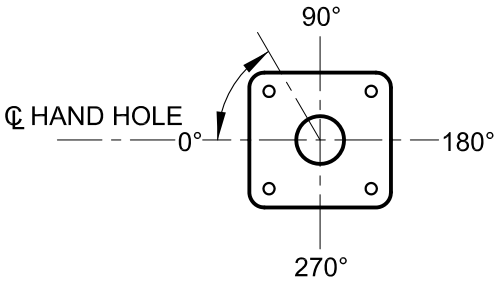

ARM LOCATION DETAIL (TYP.)

ALL ANGLES MEASURED CLOCKWISE FROM ℄ HANDHOLE LOCATION (@ 0°)

APPROVED:

DIVISION CHIEF, TRANSPORTATION ENGINEERING AND CONSTRUCTION

DIRECTOR, DEPARTMENT OF TRANSPORTATION

CITY OF BALTIMORE
DEPARTMENT OF TRANSPORTATION
TRANSPORTATION ENGINEERING AND CONSTRUCTION

GALVANIZED STEEL MAST ARM POLE

ISSUED	REVISED	REVISED
8 / 2010		

STANDARD NO.
BC 880.06-3

SCALE : NONE

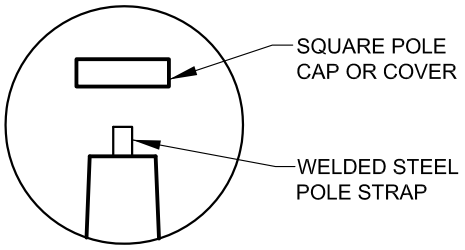

CAP FOR
SQUARE POST

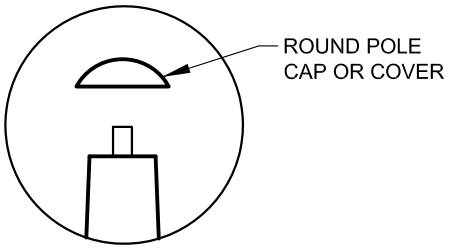

CAP FOR
ROUND POST

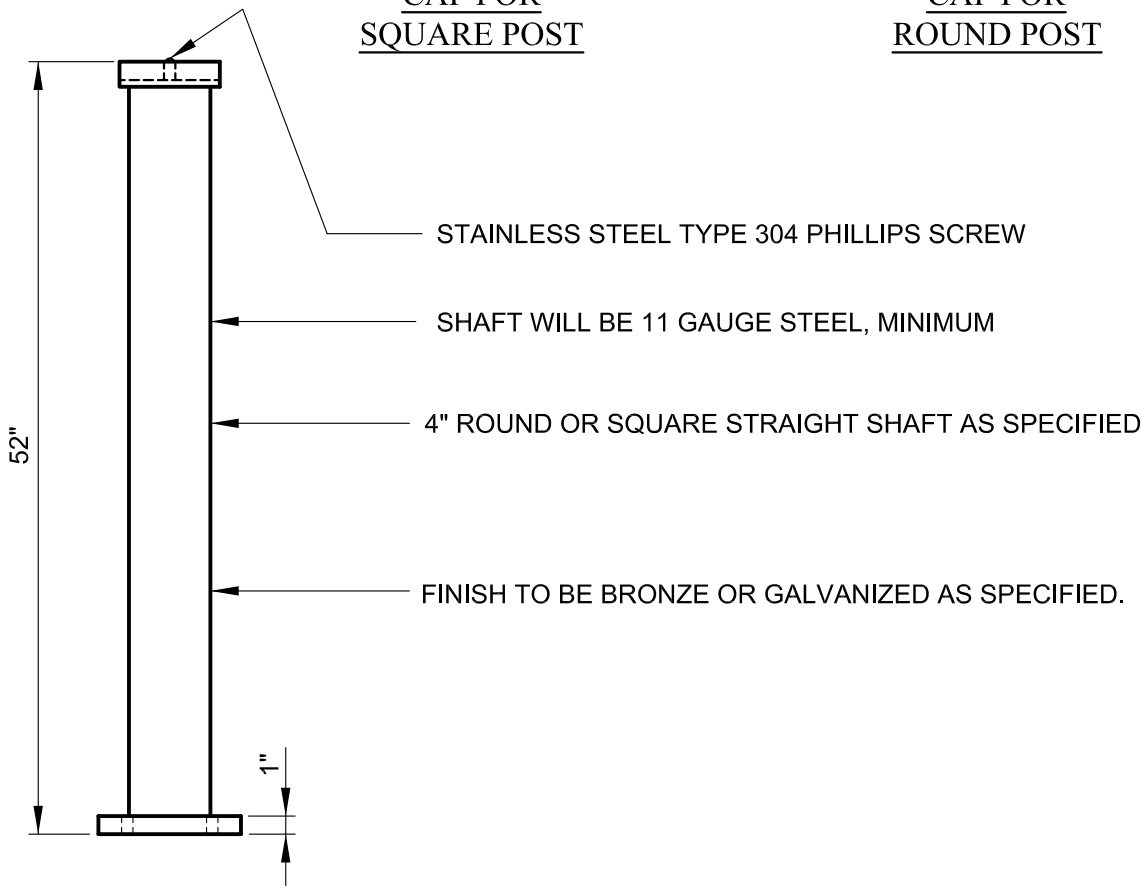

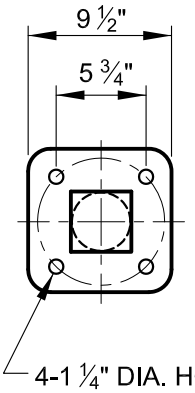

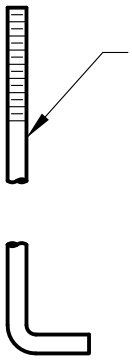

4 - ANCHOR BOLTS SHALL BE SUPPLIED PER PEDESTAL. EACH BOLT SHALL BE FURNISHED WITH 2-HEX NUTS AND 2-FLAT WASHERS; REFER TO STANDARD ANCHOR BOLT DETAIL, SEE BC 880.08

APPROVED:

DIVISION CHIEF, TRANSPORTATION ENGINEERING AND CONSTRUCTION

DIRECTOR, DEPARTMENT OF TRANSPORTATION

CITY OF BALTIMORE
DEPARTMENT OF TRANSPORTATION
TRANSPORTATION ENGINEERING AND CONSTRUCTION

ISSUED	REVISED	REVISED
8 / 2010		

PUSH BUTTON POST

STANDARD NO.
BC 880.07

SCALE : NONE

SHEET 1 OF 1

REQUIREMENTS

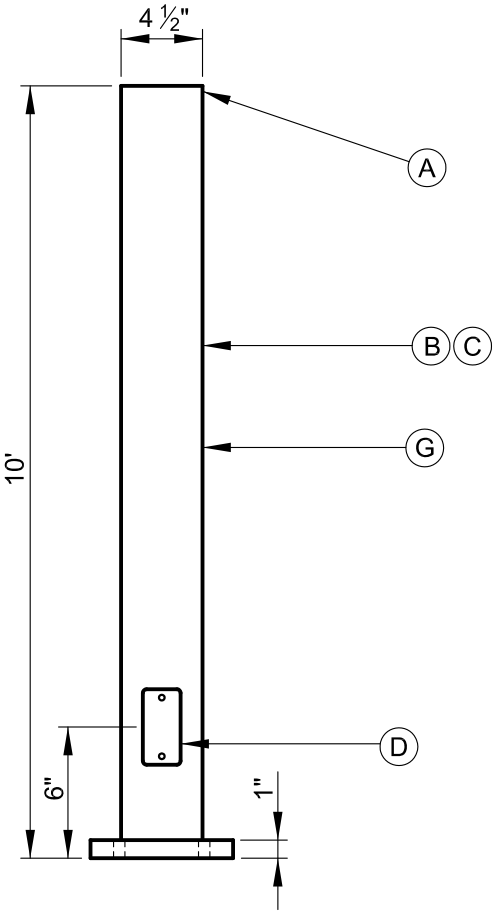

(A) ROUND 4" DIAMETER STANDARD PIPE SIZE (4 ½" O.D. x .237" WALL THICKNESS)

(B) ROUND STRAIGHT STEEL SHAFT

(C) SHAFT TO BE SCHEDULE 40 PIPE

(D) MINIMUM SIZE 3" x 5" REINFORCED HANDHOLE AND COVER PLATE WITH ROUNDED CORNERS. MAXIMUM ⅜" PROTRUSION AROUND HANDHOLE.

(E) (8) - 1" GALVANIZED, HEX NUTS AND FLAT WASHERS REQUIRED PER POLE

(F) (4) - 1" GALVANIZED ANCHOR BOLTS REQUIRED PER POLE

(G) FINISH TO BE GALVANIZED OR BRONZE AS SPECIFIED

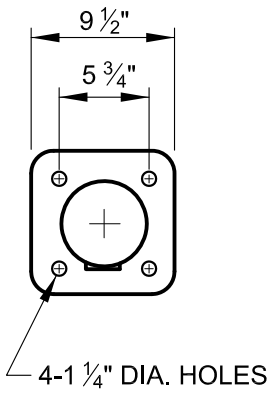

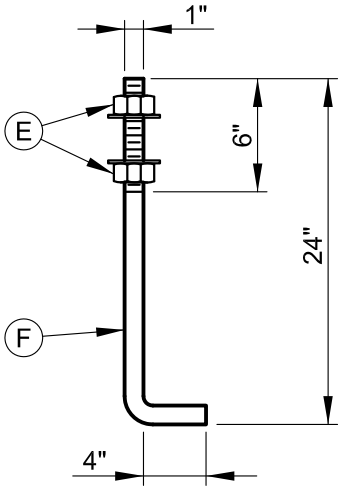

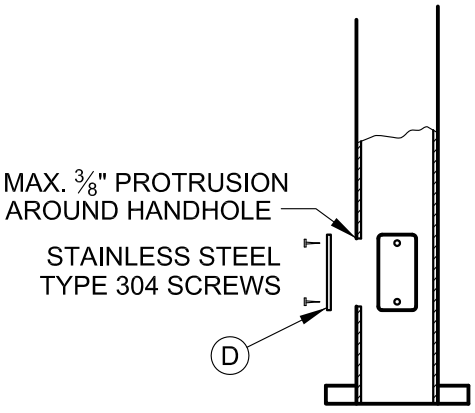

HANDHOLE DETAIL

NOTE: A ⅜" POLE GROUNDING LUG SHALL BE PROVIDED AT THE HANDHOLE.

APPROVED:

DIVISION CHIEF, TRANSPORTATION ENGINEERING AND CONSTRUCTION

DIRECTOR, DEPARTMENT OF TRANSPORTATION

CITY OF BALTIMORE
DEPARTMENT OF TRANSPORTATION
TRANSPORTATION ENGINEERING AND CONSTRUCTION

ISSUED	REVISED	REVISED
8 / 2010		

STEEL PEDESTAL POLE

STANDARD NO.
BC 880.08

SCALE : NONE

SHEET 1 OF 1

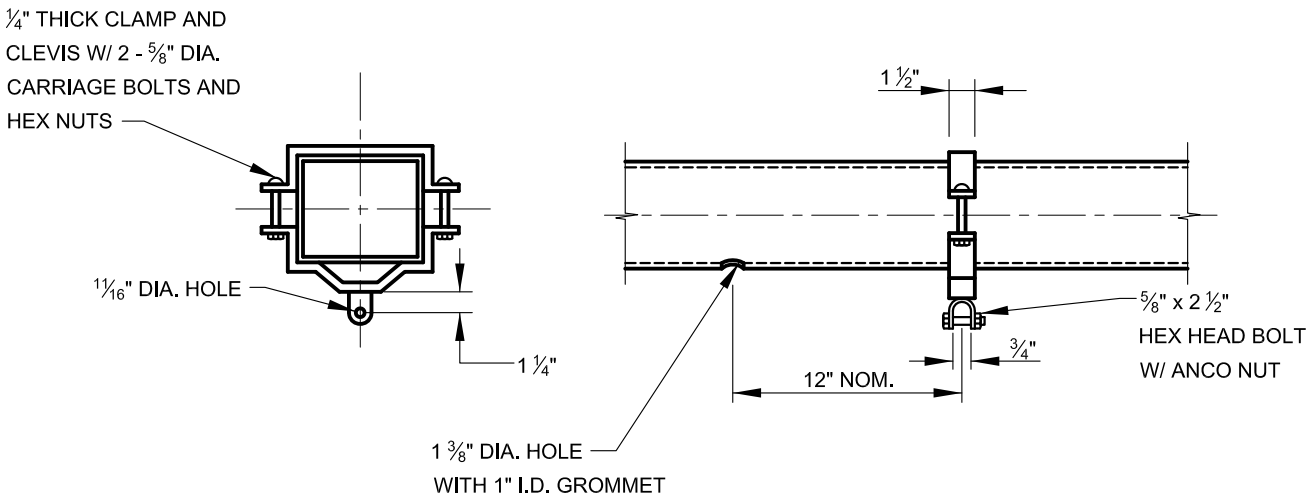

SIGNAL HANGER DETAIL

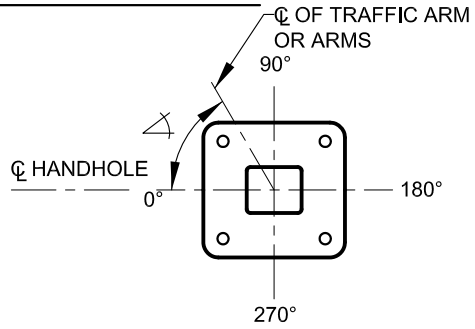

ARM LOCATION DETAIL (TYP.)

ALL ANGLES MEASURED
CLOCKWISE FROM ℄ HANDHOLE
LOCATION (@ 0°)

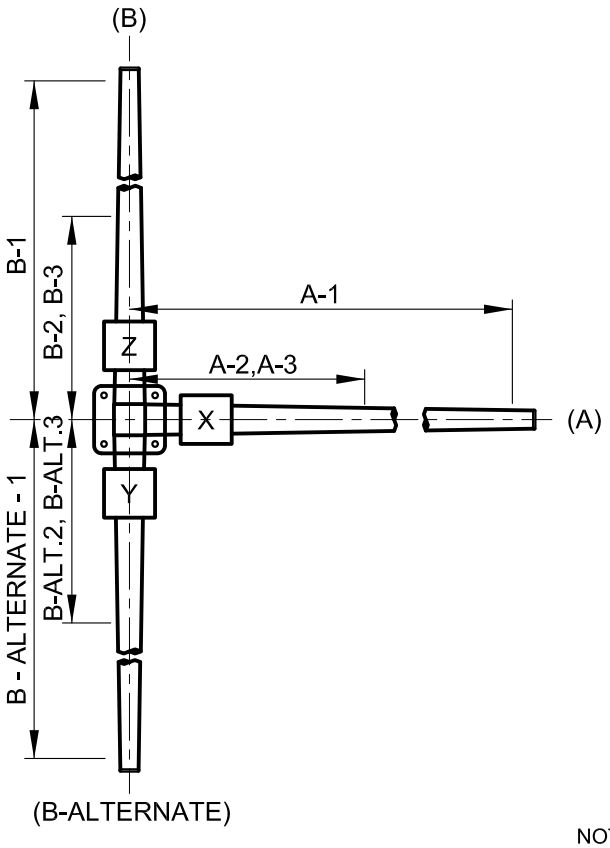

NOTE:
A-1, A-2, A-3.... THRU B-ALTERNATE INDICATE SIGNAL HANGER LOCATION AND LENGTH OF MAST ARM DIMENSIONS. REFER TO CHART ON PLANS FOR DIMENSIONS.

APPROVED:

DIVISION CHIEF, TRANSPORTATION ENGINEERING AND CONSTRUCTION

DIRECTOR, DEPARTMENT OF TRANSPORTATION

CITY OF BALTIMORE
DEPARTMENT OF TRANSPORTATION
TRANSPORTATION ENGINEERING AND CONSTRUCTION

INNER HARBOR TYPE SQUARE STEEL POLES & MAST ARMS

ISSUED	REVISED	REVISED
8 / 2010		

STANDARD NO.
BC 880.09-2

SCALE : NONE

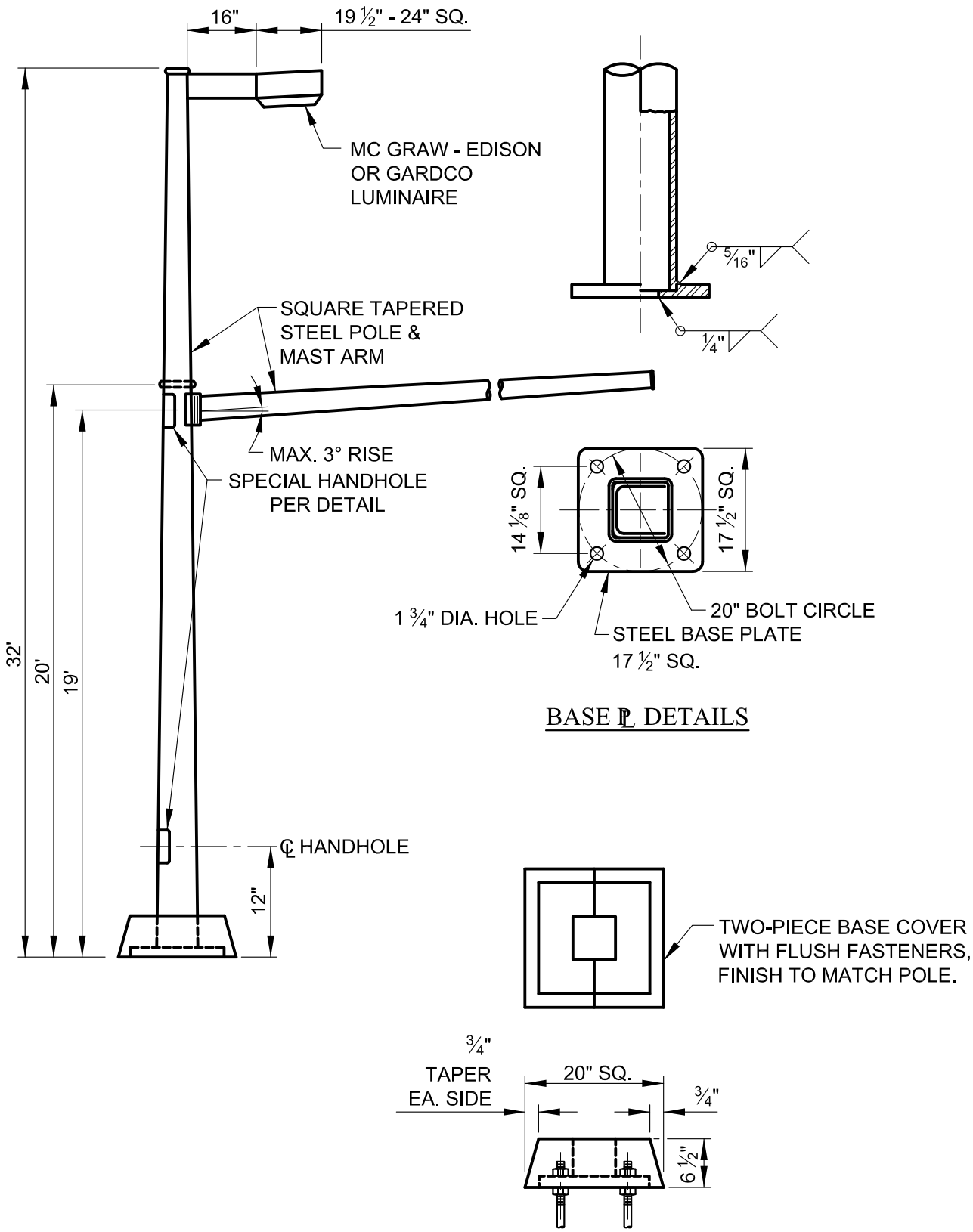

BASE ℙ DETAILS

BASE COVER DETAILS

CITY OF BALTIMORE 1797	APPROVED: Bimal Devkota DIVISION CHIEF, TRANSPORTATION ENGINEERING AND CONSTRUCTION Khalil Zaid DIRECTOR, DEPARTMENT OF TRANSPORTATION	CITY OF BALTIMORE DEPARTMENT OF TRANSPORTATION TRANSPORTATION ENGINEERING AND CONSTRUCTION	ISSUED 8 / 2010	REVISED	REVISED
		INNER HARBOR TYPE SQUARE STEEL POLES & MAST ARMS	STANDARD NO. BC 880.09-1		
			SCALE : NONE	SHEET 1 OF 4	

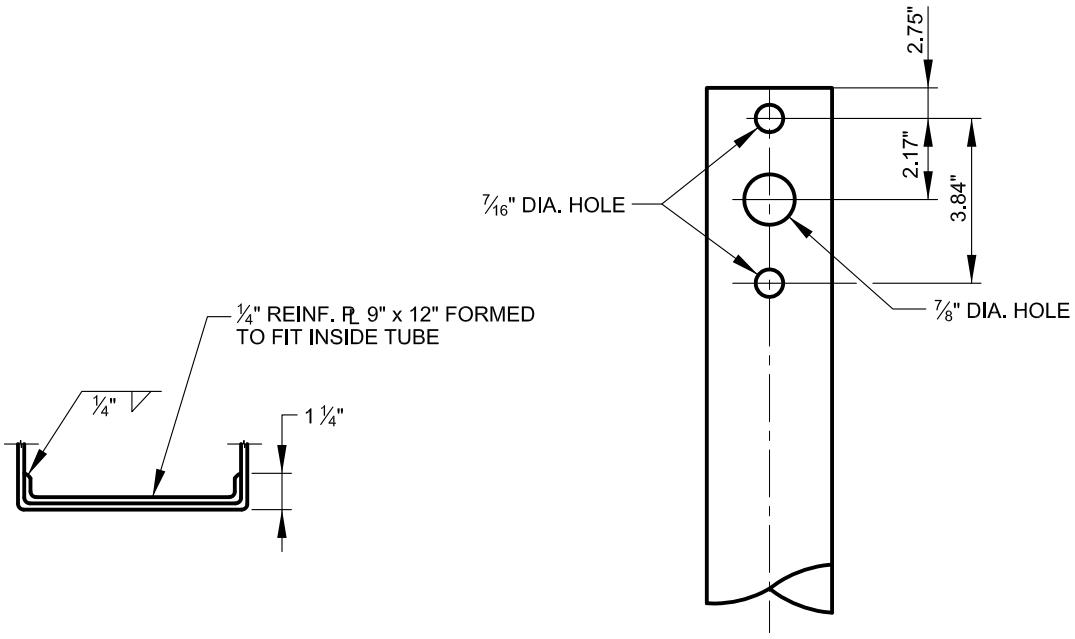

TYPICAL DRILLING DETAIL
FOR
LUMINAIRE MAST ARM LOCATION

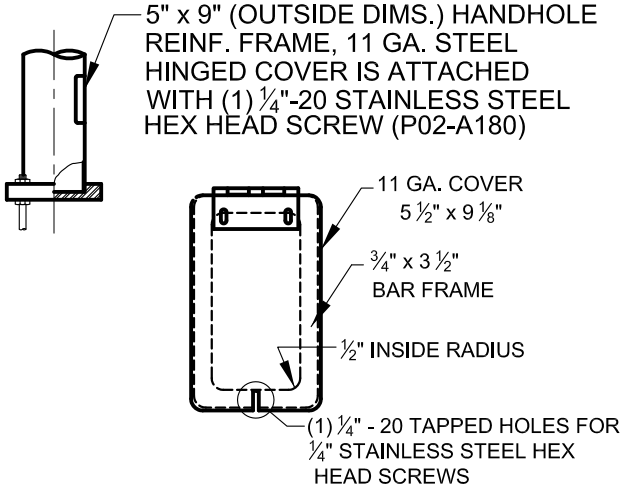

HANDHOLE DETAIL
SCALE: 1 1/2" = 1'-0"

NOTE:
A 1/2" POLE GROUNDING LUG SHALL BE PROVIDED AT HANDHOLE.

APPROVED:

DIVISION CHIEF, TRANSPORTATION ENGINEERING AND CONSTRUCTION

DIRECTOR, DEPARTMENT OF TRANSPORTATION

CITY OF BALTIMORE
DEPARTMENT OF TRANSPORTATION
TRANSPORTATION ENGINEERING AND CONSTRUCTION

ISSUED	REVISED	REVISED
8 / 2010		

INNER HARBOR TYPE SQUARE STEEL POLES & MAST ARMS

STANDARD NO.
BC 880.09-3

SCALE : NONE

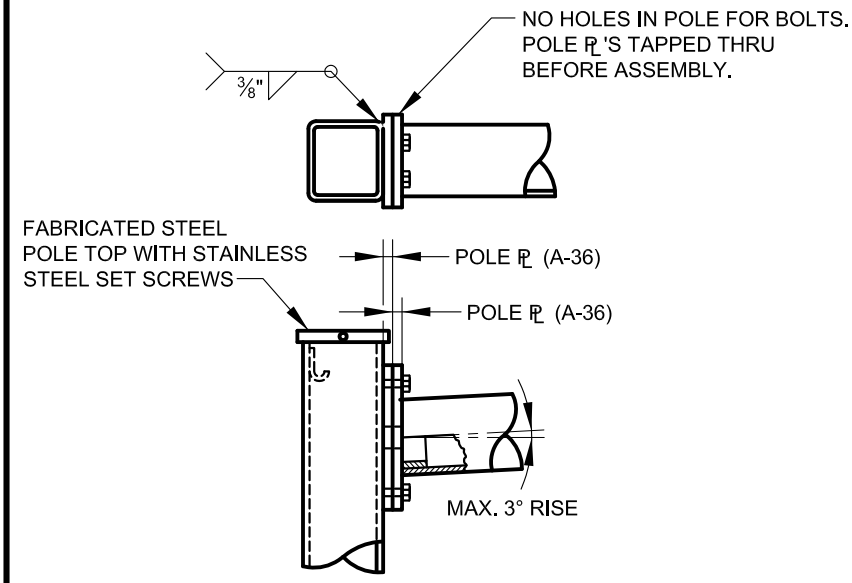

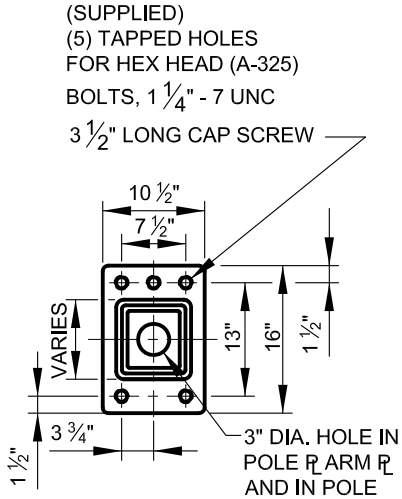

ARM ATTACHMENT DETAILS

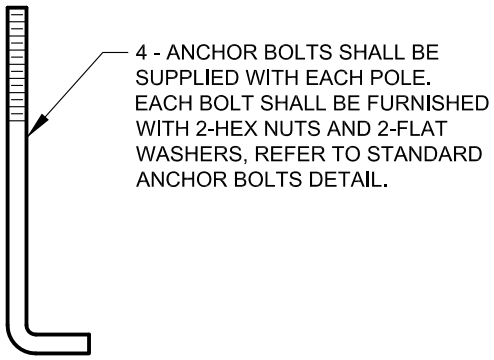

APPROVED:

DIVISION CHIEF, TRANSPORTATION ENGINEERING AND CONSTRUCTION

DIRECTOR, DEPARTMENT OF TRANSPORTATION

CITY OF BALTIMORE
DEPARTMENT OF TRANSPORTATION
TRANSPORTATION ENGINEERING AND CONSTRUCTION

INNER HARBOR TYPE SQUARE STEEL POLES & MAST ARMS

ISSUED	REVISED	REVISED
8 / 2010		

STANDARD NO.
BC 880.09-4

SCALE : NONE

SHEET 4 OF 4

REQUIREMENTS

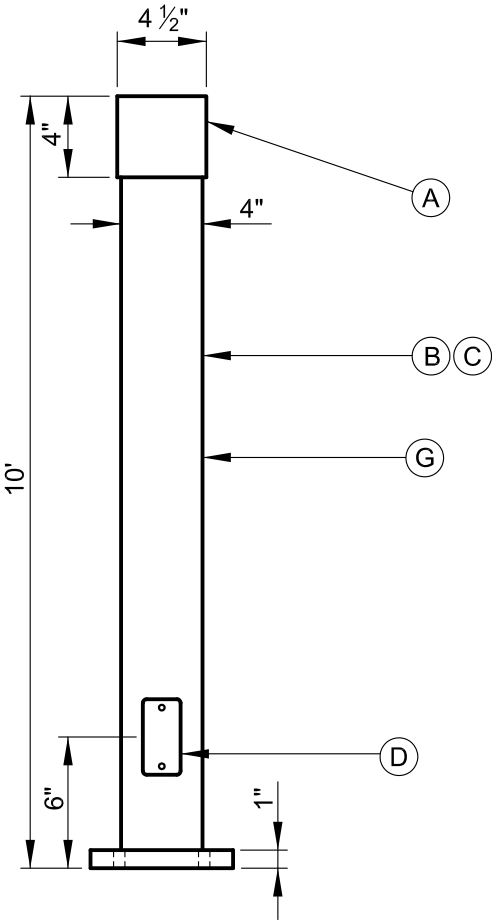

(A) ROUND 4" DIAMETER STANDARD PIPE SIZE (4 ½" O.D. x .237" WALL THICKNESS)

(B) SQUARE STRAIGHT STEEL SHAFT

(C) SHAFT TO BE MINIMUM 11 GAUGE STEEL

(D) MINIMUM SIZE 3" x 5" REINFORCED HANDHOLE AND COVER PLATE WITH ROUNDED CORNERS. MAXIMUM ⅜" PROTRUSION AROUND HANDHOLE.

(E) (8) - 1" GALVANIZED, HEX NUTS AND FLAT WASHERS REQUIRED PER POLE

(F) (4) - 1" GALVANIZED ANCHOR BOLTS REQUIRED PER POLE

(G) FINISH TO BE GALVANIZED OR BRONZE AS SPECIFIED

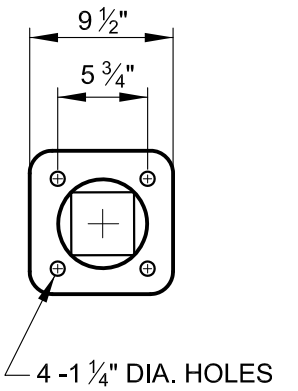

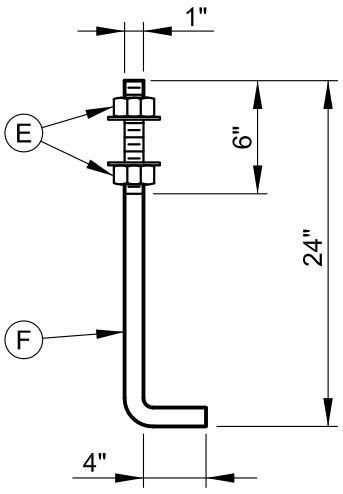

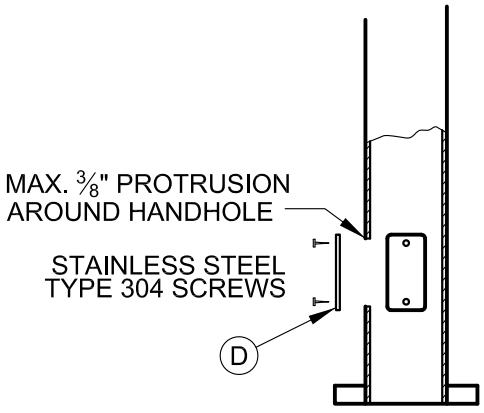

HANDHOLE DETAIL

NOTE: A ⅜" POLE GROUNDING LUG SHALL BE PROVIDED AT THE HANDHOLE.

APPROVED:

DIVISION CHIEF, TRANSPORTATION ENGINEERING AND CONSTRUCTION

DIRECTOR, DEPARTMENT OF TRANSPORTATION

CITY OF BALTIMORE
DEPARTMENT OF TRANSPORTATION
TRANSPORTATION ENGINEERING AND CONSTRUCTION

ISSUED	REVISED	REVISED
8 / 2010		

INNER HARBOR TYPE SQUARE PEDESTAL POLE

STANDARD NO. BC 880.10

SCALE : NONE

SHEET 1 OF 1

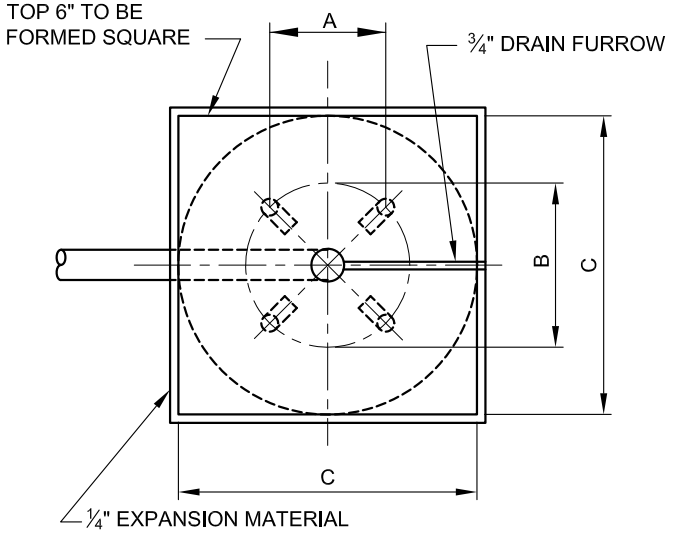

NOTES:

1. THE BASE EXCAVATION FOR STRAIN POLES AND MAST ARM POLES MAY BE AUGERED WITH A 3 FOOT DIAMETER AUGER PROVIDED THE TOP SIX INCHES OF THE BASE ARE BLOCKED SQUARE.
2. STANDARD PVC CONDUIT ELBOW ENCASED IN CONCRETE.
3. WHERE FOUNDATIONS ARE CONSTRUCTED OUTSIDE OF SIDEWALK AREAS, THE TOP OF THE FOUNDATION SHALL BE CONSTRUCTED TO AN ELEVATION ONE INCH ABOVE THE FINISHED GRADE AND A ONE INCH CHAMFER SHALL BE FORMED AROUND THE OUTSIDE EDGE.
4. BLOCK OUT NEW BASE WITH A ¼ INCH EXPANSION MATERIAL (SEE BC 655.01)
5. POLES TO BE THREE FEET BACK OF FACE OF CURB UNLESS OTHERWISE NOTED.
6. FOR ANCHOR BOLT DIMENSIONS REFER TO STANDARD ANCHOR BOLTS DETAIL.
7. THE TOPS OF ALL ANCHOR BOLTS ARE TO BE LEVEL.
8. REINFORCING STEEL NOT REQUIRED FOR PEDESTAL AND PUSH BUTTON POST BASES.
9. GROUNDS FOR PEDESTAL AND PUSH BUTTON FOUNDATIONS CARRIED TO MAIN CONTROL POLE.

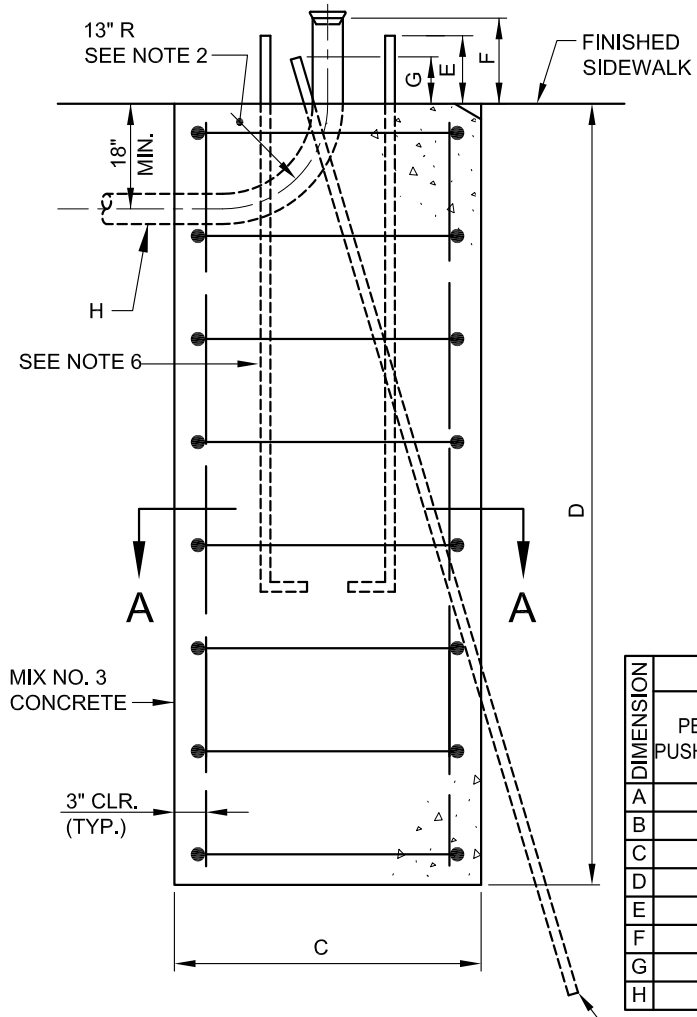

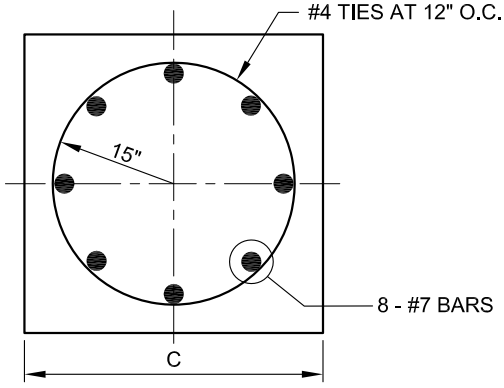

SECTION A-A

DIMENSION	DIMENSION SCHEDULE			
	PEDESTAL AND PUSH BUTTON POST	STRAIN POLE AND LIGHT DUTY MAST ARM POLE	MAST ARM POLE	INNER HARBOR POLE
A	5 ¾"	10 ⅝"	14 ⅛"	14 ⅛"
B	8 ⅛"	15"	20"	20"
C	18"	36"	36"	36"
D	36"	9'-6"	9'-6"	9'-6"
E	4"	7 ½"	7 ½"	6 ½"
F	6"	8"	8"	8"
G	6"	6"	6"	8"
H	3"	4"	4"	4"

APPROVED:

DIVISION CHIEF, TRANSPORTATION ENGINEERING AND CONSTRUCTION

DIRECTOR, DEPARTMENT OF TRANSPORTATION

CITY OF BALTIMORE
DEPARTMENT OF TRANSPORTATION
TRANSPORTATION ENGINEERING AND CONSTRUCTION

ISSUED	REVISED	REVISED
8 / 2010	10-9-86	

POLE, POST AND PEDESTAL FOUNDATION DETAILS - TRAFFIC

STANDARD NO.
BC 887.01

SCALE : NONE | SHEET 1 OF 1

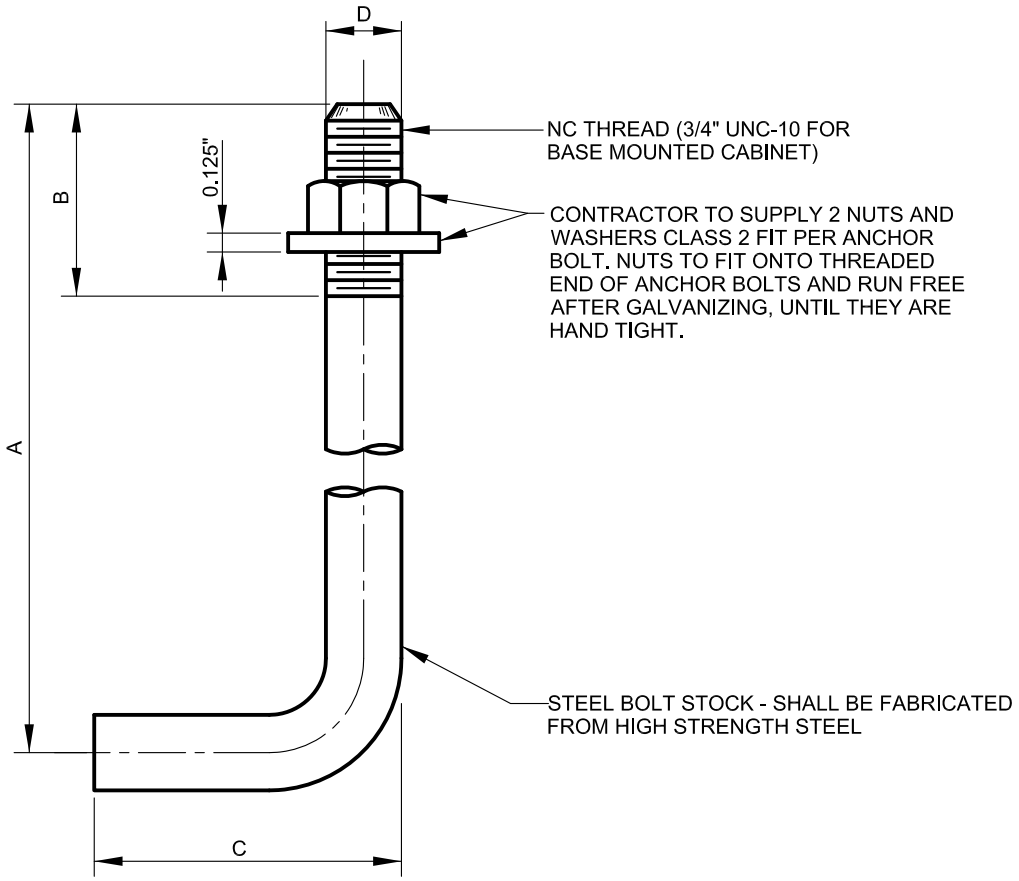

ANCHOR NUTS, BOLTS AND WASHERS SHALL BE HOT-DIPPED GALVANIZED IN ACCORDANCE WITH ASTM A 153. NUTS AND WASHERS SHALL MEET THE PHYSICAL AND CHEMICAL REQUIREMENTS OF ASTM A 307.
BASE MOUNTED CABINET, ANCHOR NUTS, BOLTS AND WASHERS SHALL MEET THE REQUIREMENTS OF NEMA STANDARD TS-2

DIMENSION	DIMENSION SCHEDULE		
	STRAIN POLE MAST ARM POLE INNER HARBOR POLE MULTI-PURPOSE POLE	PEDESTAL POLE PUSH BUTTON POST	BASE MOUNTED CONTROL CABINET
A	60"	24"	16"
B	9"	6"	3"
C	6"	4"	2"
D	1 ½"	1"	¾"

* ANCHOR BOLTS FOR 32' STRAIN POLE SHALL BE 1 ¾" IN DIAMETER

APPROVED:

DIVISION CHIEF, TRANSPORTATION ENGINEERING AND CONSTRUCTION

DIRECTOR, DEPARTMENT OF TRANSPORTATION

CITY OF BALTIMORE
DEPARTMENT OF TRANSPORTATION
TRANSPORTATION ENGINEERING AND CONSTRUCTION

STANDARD ANCHOR BOLTS - TRAFFIC

ISSUED	REVISED	REVISED
8 / 2010		

STANDARD NO.
BC 887.02

SCALE : NONE

SHEET 1 OF 1

NOTE 1

WHERE FOUNDATION REQUIRES MORE THAN 2 CONDUIT ELBOWS, THEY SHALL BE EVENLY SPACED ACROSS THE LENGTH OF THE FOUNDATION.

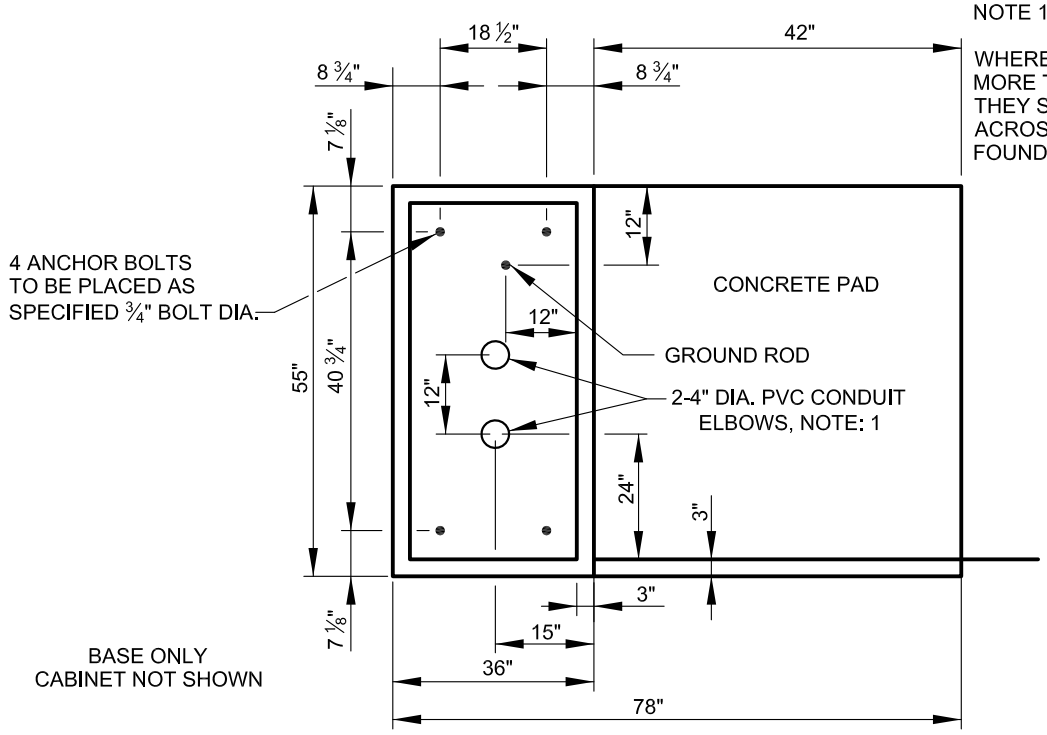

NOTE:

IF THE CABINET IS IN OR ADJACENT TO A SIDEWALK, THE PAD IS ELIMINATED.

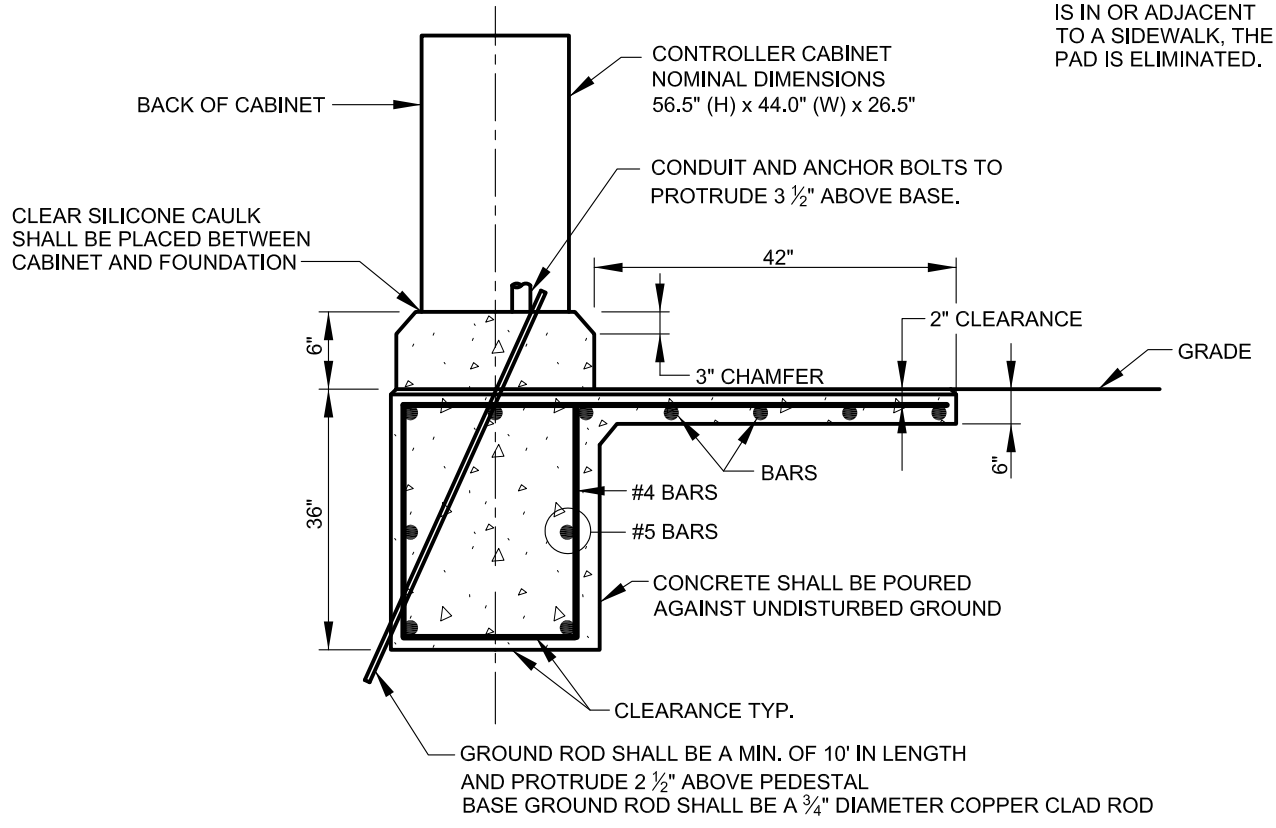

APPROVED:

DIVISION CHIEF, TRANSPORTATION ENGINEERING AND CONSTRUCTION

DIRECTOR, DEPARTMENT OF TRANSPORTATION

CITY OF BALTIMORE
DEPARTMENT OF TRANSPORTATION
TRANSPORTATION ENGINEERING AND CONSTRUCTION

CATEGORY (C) CONTROLLER CABINET FOUNDATION BASE

ISSUED	REVISED	REVISED
8 / 2010		

STANDARD NO.
BC 890.01

SCALE : NONE

SHEET 1 OF 1

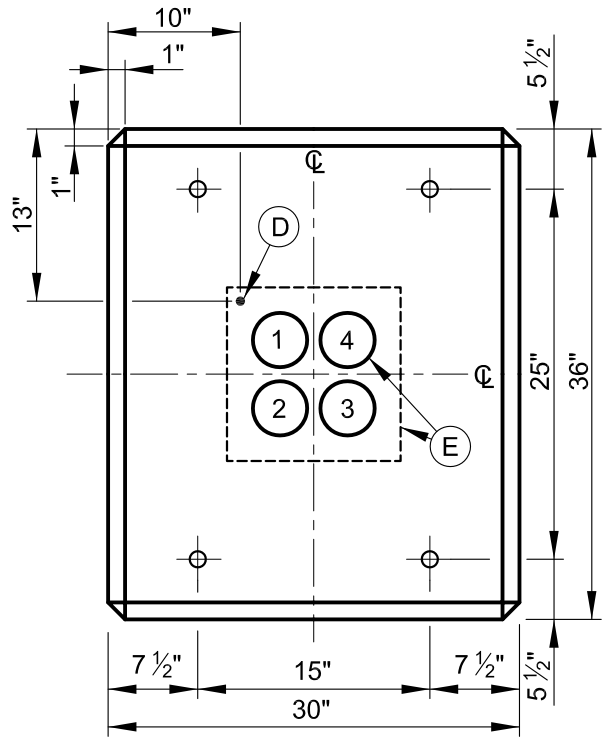

NOTES:

(A) ANCHOR BOLTS SHALL BE ¾" DIAMETER x 16" LENGTH WITH 2" HOOK. TOP 3" TO BE THREADED 8 NC TOP 6" TO BE GALVANIZED.

(B) 1" CHAMFER SHALL BE PLACED AT ALL EDGES.

(C) REINFORCING SHALL BE #5 BARS WITH #5 TIES SPACED @ 12" MAXIMUM.

(D) GROUND ROD SHALL BE MIN. 10' LENGTH X ¾" (COPPER CLAD)

(E) ALL CONDUIT SHALL BE PLACED WITHIN A 12" x 12" SPACE CENTERED AS SHOWN.

(F) A 36" x 36" x 4" CONCRETE PAD SHALL BE INSTALLED AT THE FRONT AND BACK OF EACH BASE. EACH PAD SHALL BE 1" ABOVE GRADE AND CHAMFERED 1" ON EDGE NOT BUTTING DIRECTLY TO BASE. IN SIDEWALK AREAS THE APPROPRIATE PAD OR PADS ARE ELIMINATED.

(G) FOR 336S CABINET FOUNDATION BASES A TYPE 336S CABINET BASE ADAPTER SHALL BE SUPPLIED.

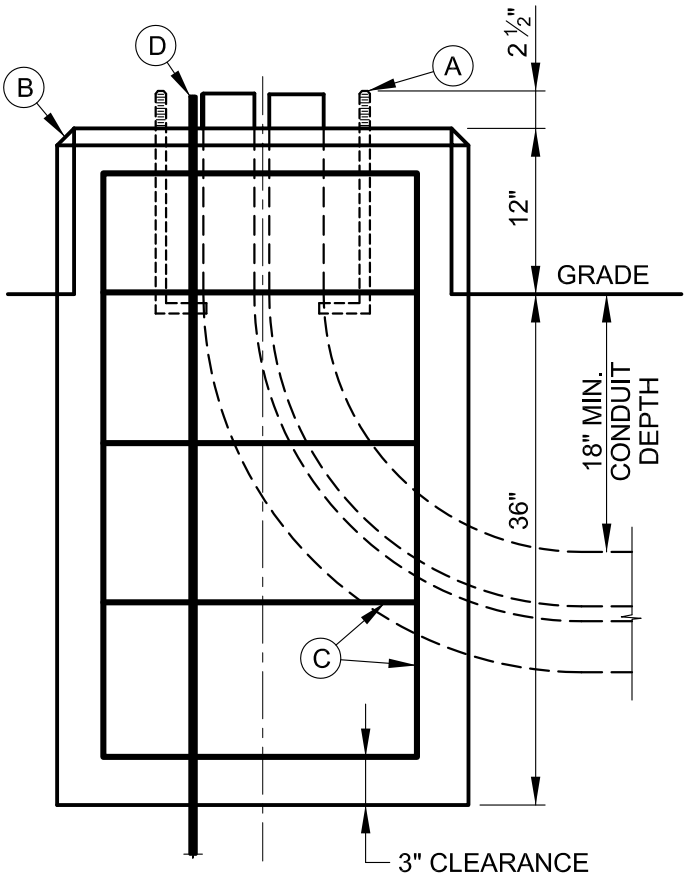

APPROVED:

DIVISION CHIEF, TRANSPORTATION ENGINEERING AND CONSTRUCTION

DIRECTOR, DEPARTMENT OF TRANSPORTATION

CITY OF BALTIMORE
DEPARTMENT OF TRANSPORTATION
TRANSPORTATION ENGINEERING AND CONSTRUCTION

TYPE 332 AND CATEGORY (E) CONTROLLER CABINET FOUNDATION BASE

ISSUED	REVISED	REVISED
8 / 2010		

STANDARD NO.
BC 890.02

SCALE : NONE

SHEET 1 OF 1

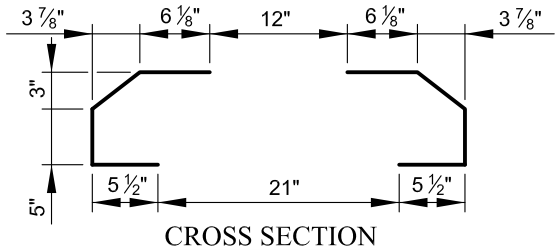

CROSS SECTION

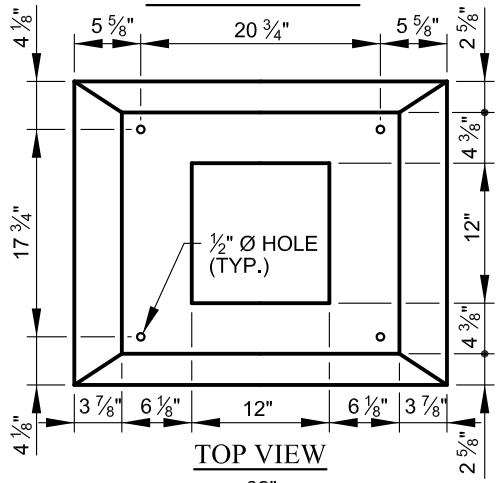

TOP VIEW

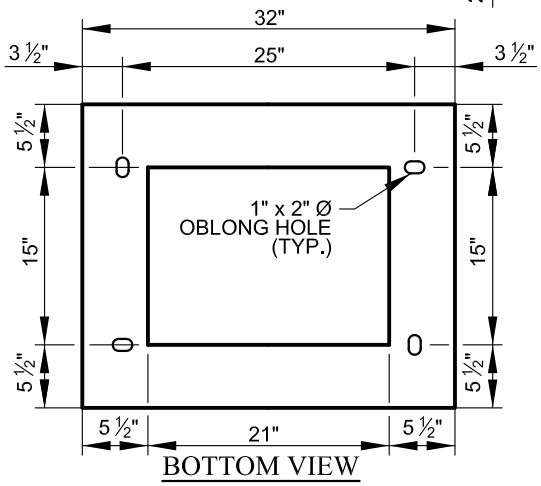

BOTTOM VIEW

NOTES:

1. THE ADAPTER SHALL BE CONSTRUCTED FROM 5052-H32, ALLUMINUM ALLOY WHICH HAS A THICKNESS OF 0.187 INCH.
2. ALL SEAMS SHALL BE WELDED. EXTERNAL WELDS SHALL BE MADE BY USING THE HELIARC WELDING METHOD. INTERNAL WELDS SHALL BE MADE BY THE WIRE WELDING METHOD. ALL WELDS SHALL BE NEATLY FORMED AND FREE OF CRACKS. BLOW HOLES AND OTHER IRREGULARITIES.
3. ALL INSIDE AND OUTSIDE EDGES OF THE ADAPTER SHALL BE FREE OF BURRS.
4. THE ADAPTER SHALL HAVE A SMOOTH, UNIFORM, UNPAINTED, NATURAL MILL FINISH.
5. THE CONTROLLER CABINET SHALL BE BOLTED TO THE ADAPTER WITH FOUR ½" STAINLESS STEEL BOLTS WITH APPROPRIATE WASHERS AND LOCK WASHERS.
6. A WEATHER TIGHT SEALANT SHALL BE APPLIED TO THE ADAPTER AT THE POINT WHERE THE ADAPTER IS BOLTED TO THE CONCRETE FOUNDATION AND AT THE POINT WHERE THE CABINET IS BOLTED TO THE ADAPTER.

APPROVED:

DIVISION CHIEF, TRANSPORTATION ENGINEERING AND CONSTRUCTION

DIRECTOR, DEPARTMENT OF TRANSPORTATION

CITY OF BALTIMORE
DEPARTMENT OF TRANSPORTATION
TRANSPORTATION ENGINEERING AND CONSTRUCTION

ISSUED	REVISED	REVISED
8 / 2010		

TYPE 336S CABINET BASE ADAPTER

STANDARD NO.
BC 890.10

SCALE : NONE

SHEET 1 OF 1

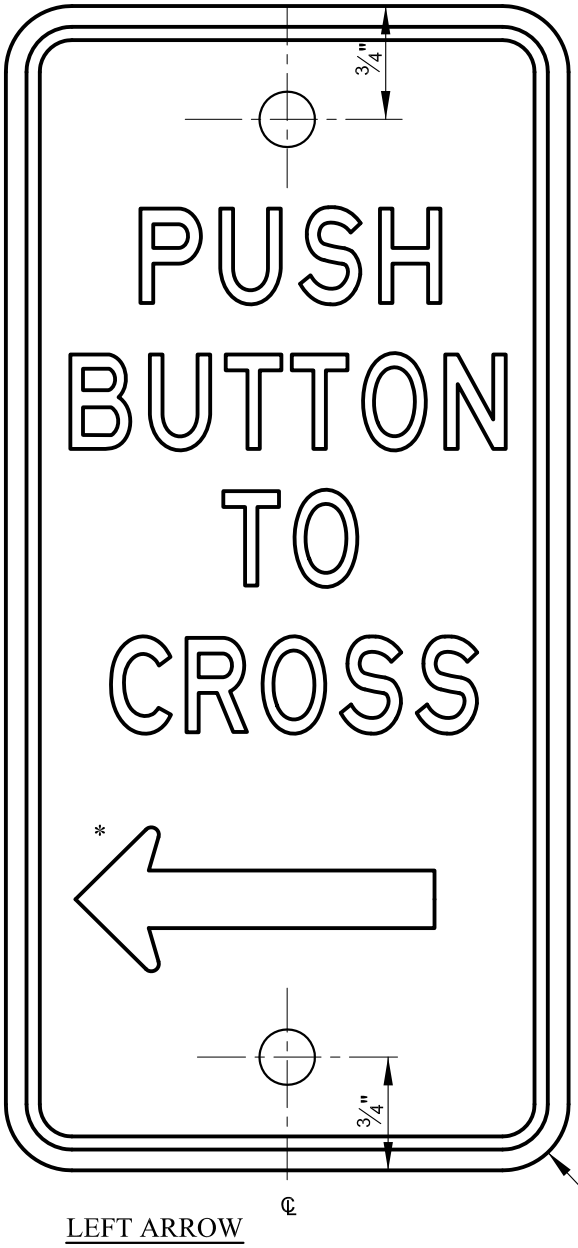

LEFT ARROW

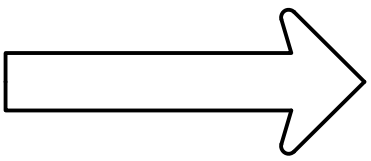

* RIGHT ARROW

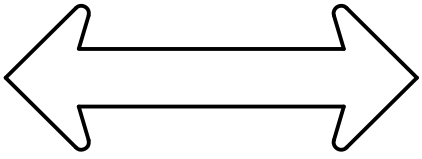

* DOUBLE ARROW

PUSH BUTTON SIGN

NOTES

SIZE:

NOMINAL 4" x 8" x 0.063"
W/ 2 - ⅜" MOUNTING HOLES

LETTERS:

HELVETICA MEDIUM (70%)
HEIGHT 0.75"
BLACK ON WHITE BACKGROUND

BORDERS:

THICKNESS	0.10"
RADIUS	0.35"
INSET	0.35"

MARGIN:

TOP	1.25"
BOTTOM	1.25"
LEFT	1.35"
RIGHT	1.35"

HARDWARE:

2 EA. 5/16" - 18 x ⅝"
STAINLESS STEEL CAP SCREWS
W/ ALUMINUM WASHERS

INSTALLATION

INSTALL SIGN SO THAT ARROW INDICATES DIRECTION OF PEDESTRIAN CROSSING.

(DOUBLE ARROW TYPICALLY USED ON MEDIAN OF DIVIDED ROADWAY)

APPROVED:

DIVISION CHIEF, TRANSPORTATION ENGINEERING AND CONSTRUCTION

DIRECTOR, DEPARTMENT OF TRANSPORTATION

CITY OF BALTIMORE
DEPARTMENT OF TRANSPORTATION
TRANSPORTATION ENGINEERING AND CONSTRUCTION

ISSUED	REVISED	REVISED
8 / 2010		

PUSH BUTTON SIGN

STANDARD NO.
BC 890.11

SCALE : NONE

SHEET 1 OF 1

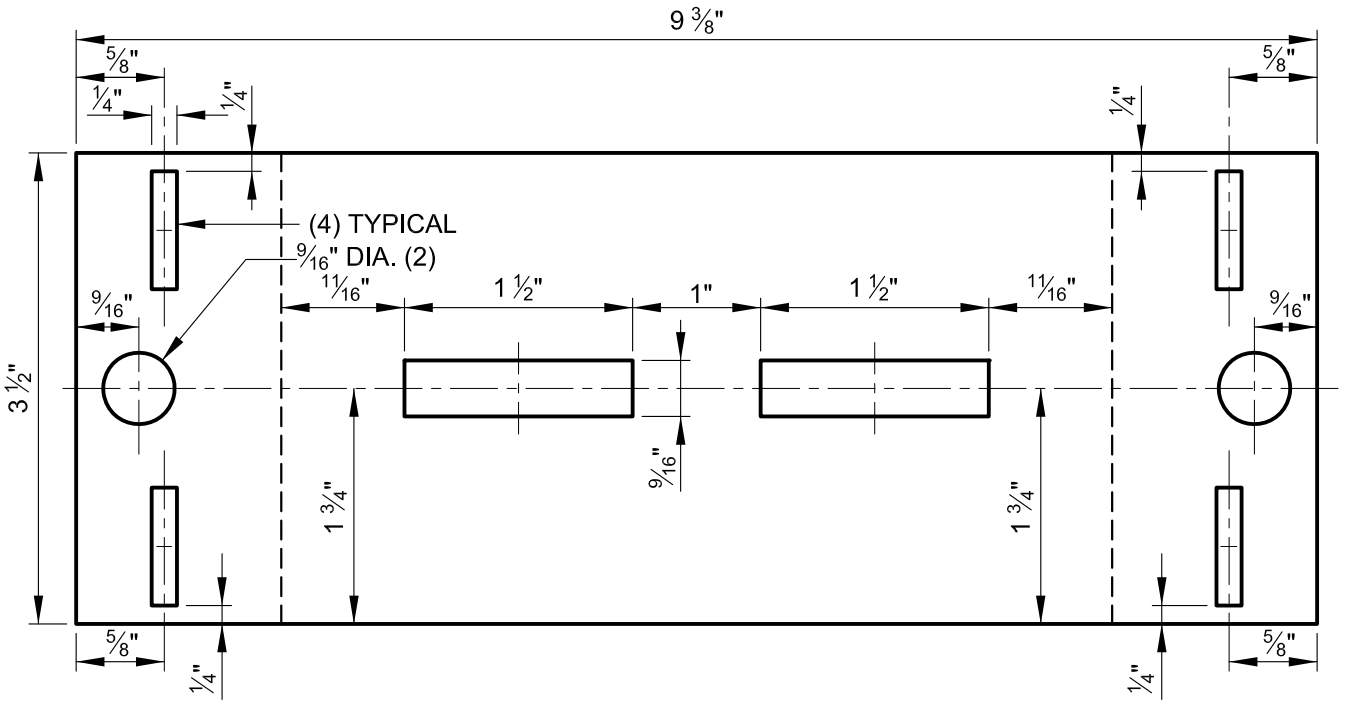

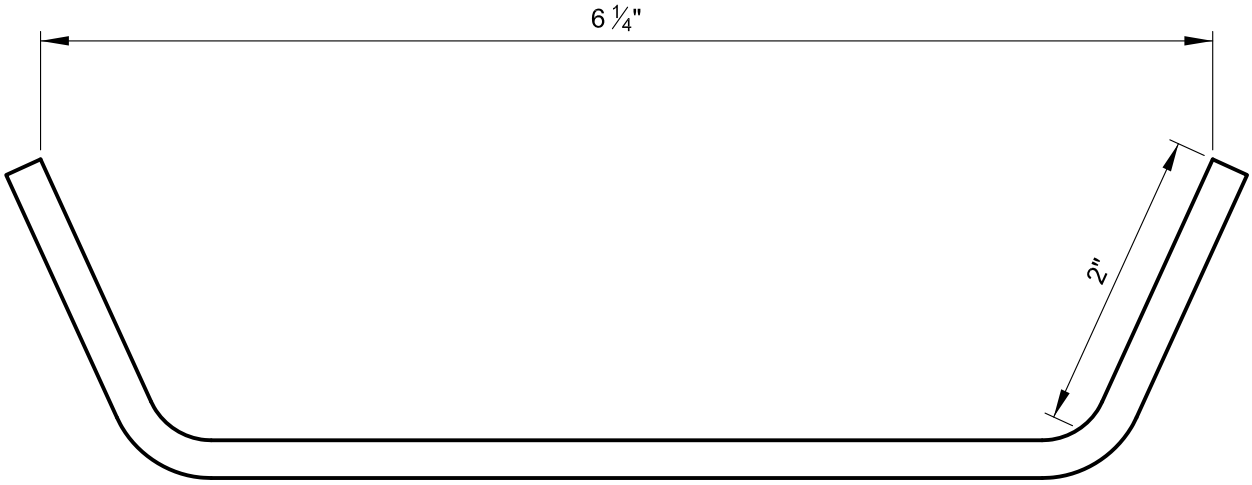

MATERIAL - ¼" ALUMINUM #5052-H32 OR 3303-H14

BEND RADIUS - ¼"

APPROVED:

DIVISION CHIEF, TRANSPORTATION ENGINEERING AND CONSTRUCTION

DIRECTOR, DEPARTMENT OF TRANSPORTATION

CITY OF BALTIMORE
DEPARTMENT OF TRANSPORTATION
TRANSPORTATION ENGINEERING AND CONSTRUCTION

CABINET MOUNTING BRACKET TRAFFIC

ISSUED	REVISED	REVISED
8 / 2010		

STANDARD NO.
BC 890.12

SCALE : NONE

SHEET 1 OF 1

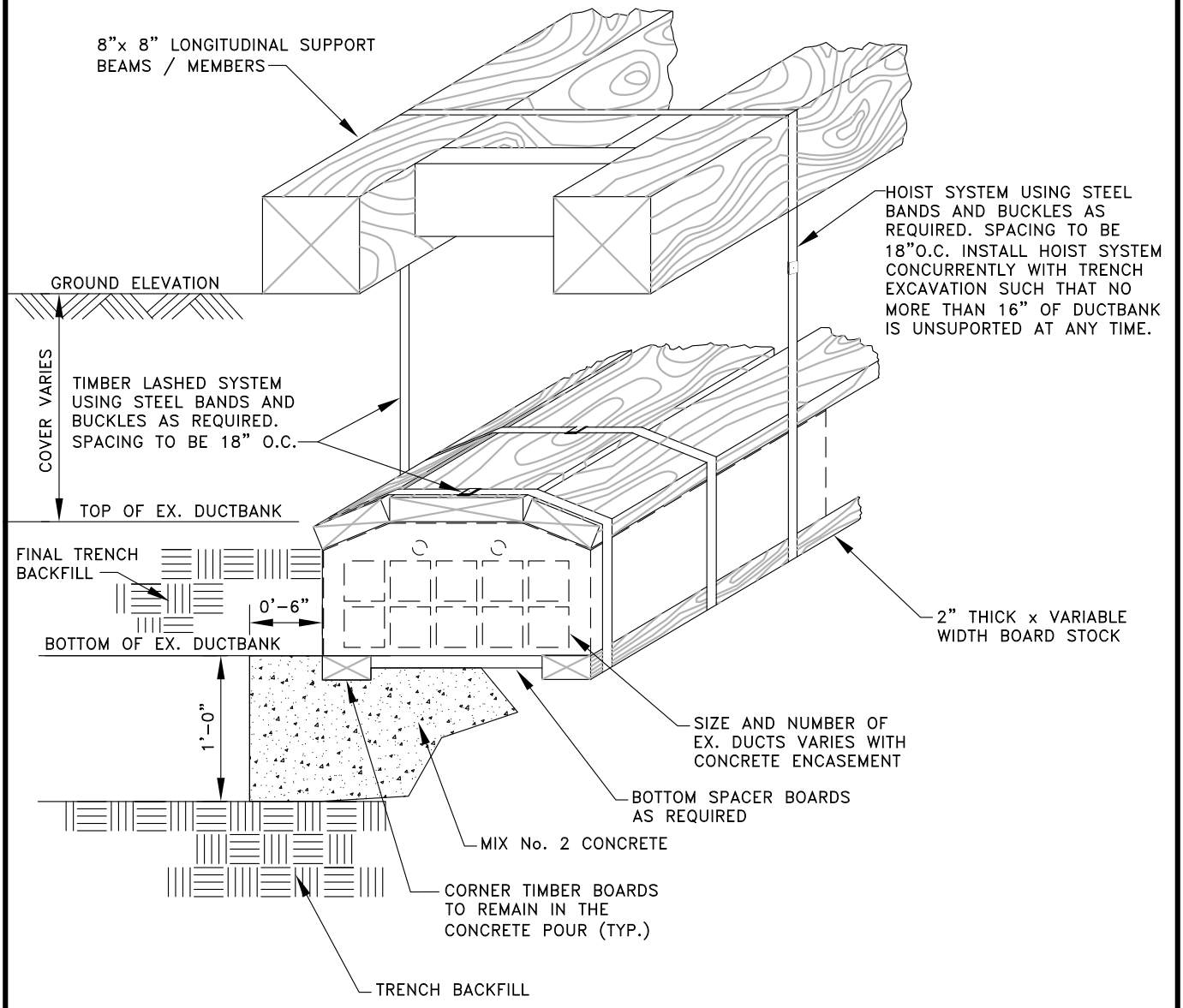

EXISTING DUCTBANK SUPPORT SYSTEM

NOT TO SCALE

NOTES:

1. THE MAXIMUM ALLOWABLE TOTAL DEFLECTION OF THE SUPPORTED DUCTBANK ACROSS THE EXCAVATED TRENCH IS ¾ INCH.

2. THE BALTIMORE CITY MIX No. 2 CONCRETE SHALL HAVE A MINIMUM 28–DAY COMPRESSIVE STRENGTH OF 3,000 PSI. THE BEARING STRESS OF THE LOADING OVER THE MIX No. 2 CONCRETE SHALL NOT EXCEED 900 PSI.

APPROVED:

CHIEF, CONDUIT DIVISION

DIRECTOR, DEPARTMENT OF TRANSPORTATION

CITY OF BALTIMORE
DEPARTMENT OF TRANSPORTATION
CONDUIT DIVISION

ISSUED	REVISED	REVISED
8 / 2010		

EXISTING DUCTBANK SUPPORT SYSTEM

STANDARD NO. BC 891.01

SCALE : NONE

SHEET 1 OF 1

ADAPTING PLASTIC DUCT TO OTHER DUCT MATERIALS

This standard details installation procedures for using plastic duct to replace or adapt to other duct materials such as single or multiple square bore tile, multiple round bore concrete, asbestos cement, or bituminous fiber. Also, included are installation procedures for installing split duct around existing cables. The following recommendations are separated into two major sections: I. Occupied Duct and II. Unoccupied Duct.

I. Occupied Duct

Joining or replacing existing occupied ducts with manufactured split duct and fittings.

A. Existing Duct Material

1. When joining 3–1/4" or 3–1/2" square bore plastic adapters to existing tile duct, use 3–1/2" split duct (non–stock) or when joining 3–3/4", use 4" split duct (See Figure 1) and proceed as follows:

   a. Open up a split square bore adapter and snap over cable.

   b. Square end of adapter must butt or fit snugly into tile duct. Seal joint as detailed in A–2.

   c. Butt round end of adapter to the split duct. Remove the white inner liner from the wraparound heat shrink sleeve. Position the wraparound sleeve centrally over the butt joint (2" min. overlap). Slide the metal channel into position along the rails of the wraparound sleeve. Shrink the wraparound sleeve starting in the middle and move the torch with a brushing motion around the sleeve. When the center area is completely shrunk, move toward one end. Then shrink from the center toward the other end. Be sure to heat the whole circumference of the wraparound during shrinking. The joint is now complete. Allow to cool before moving.

   d. For recommendations on assembling split duct, see Page 3.

   e. Repeat operations described in paragraphs (a) through (c) if you reconnect to square bore tile duct.

2. When joining square bore plastic adapters to single or multiple tile duct, a hand placed grout should be used to assure a tight joint. Preparation shall be as follows:

   a. Clean off all loose and foreign materials which would prevent bond between the grout and the surfaces contacting the grout.

   b. Place 2" X 2" welded wire fabric under tile duct.

CITY OF BALTIMORE 1797	APPROVED: Richard L. Baker CHIEF, CONDUIT DIVISION Khalil Zaied DIRECTOR, DEPARTMENT OF TRANSPORTATION	CITY OF BALTIMORE DEPARTMENT OF TRANSPORTATION CONDUIT DIVISION	ISSUED	REVISED	REVISED
			8 / 2010		
		ADAPTING PLASTIC DUCT TO OTHER DUCT MATERIALS	STANDARD NO. BC 892.01-1		
			SCALE : NONE	SHEET 1 OF 10	

c. When using split adapters, it is recommended that 2" wide heating duct tape be wrapped around all connections and over the split areas to keep grout from entering the duct.

d. Work should start from the bottom tier of ducts, grouting each tier separately.

e. Completely fill all recesses and assure the grout material is in complete contact with all tile, concrete, etc. and plastic surfaces. Wrap wire fabric around tile/plastic joint and completely cover with grout.

f. Protect freshly placed grout from excessively hot or cold temperature.

g. Allow grout to properly harden before continuing with duct laying operation (8 hour minimum).

Figure 1

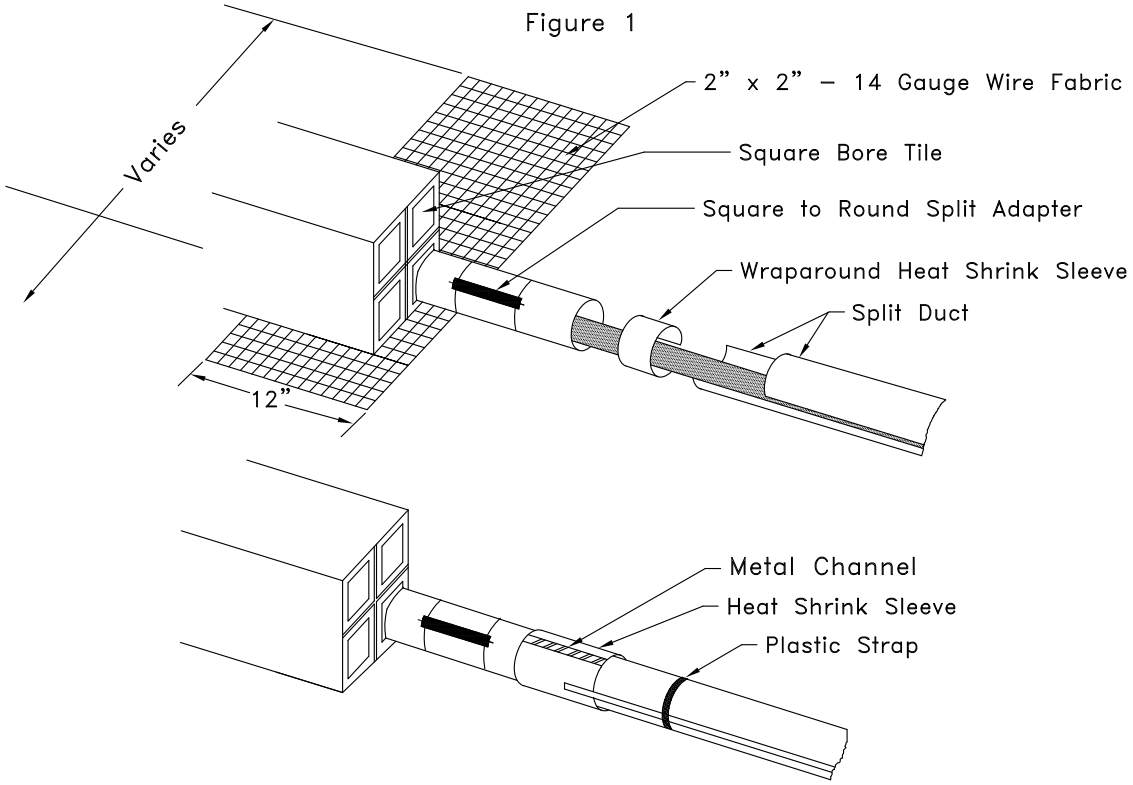

3. When joining 4" split duct to 4" round bore concrete, asbestos cement, plastic, or fiber duct (See Figure 2), proceed as follows:

a. Use a split internal joining coupling. Snap internal joining coupling over cable. Apply a light coat of sealing material over starting end of coupling and slide snugly into existing duct.

b. Assemble 4" split plastic duct around cable. Apply PVC cement to exposed end of internal joining coupling and slide assembled duct over coupling.

CITY OF BALTIMORE 1797	APPROVED: Richard L. Baker CHIEF, CONDUIT DIVISION Khalil Zaied DIRECTOR, DEPARTMENT OF TRANSPORTATION	CITY OF BALTIMORE DEPARTMENT OF TRANSPORTATION CONDUIT DIVISION	ISSUED	REVISED	REVISED
			8 / 2010		
		ADAPTING PLASTIC DUCT TO OTHER DUCT MATERIALS	STANDARD NO. BC 892.01-2		
			SCALE : NONE	SHEET 2 OF 10	

c. Continue assembling split plastic duct to the end of run.

Figure 2

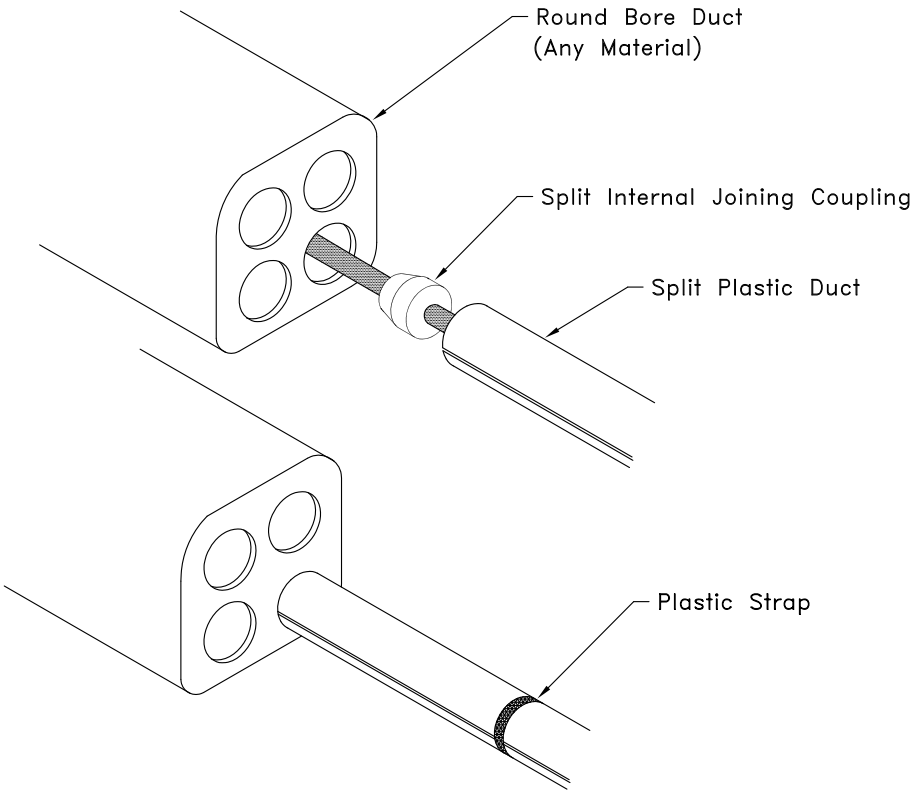

B. Split Duct Installation

In order to achieve maximum strength throughout a run using split duct, it is recommended that sections be staggered as shown in drawings below. It is further recommended that interlocking spacers be used to hold duct in position during assembly of multiple duct installation.

1. Straight Split Duct
   a. Place one 10 ft. split duct section under cable (See Figure 3).

Figure 3

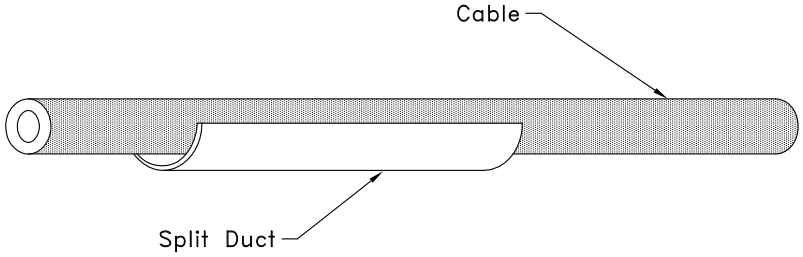

CITY OF BALTIMORE 1797	APPROVED: CHIEF, CONDUIT DIVISION; DIRECTOR, DEPARTMENT OF TRANSPORTATION	CITY OF BALTIMORE DEPARTMENT OF TRANSPORTATION CONDUIT DIVISION	ISSUED	REVISED	REVISED
			8 / 2010		
		ADAPTING PLASTIC DUCT TO OTHER DUCT MATERIALS	STANDARD NO. BC 892.01-3		
			SCALE : NONE	SHEET 3 OF 10	

ADAPTING PLASTIC DUCT TO OTHER DUCT MATERIALS

b. Saw a 10 ft. section in half, place 5 ft. section over cable and strap or tape the two sections together. Locate straps or tape about 1 ft. from ends of 5 ft. length (See Figure 4 and Figure 5).

Figure 4

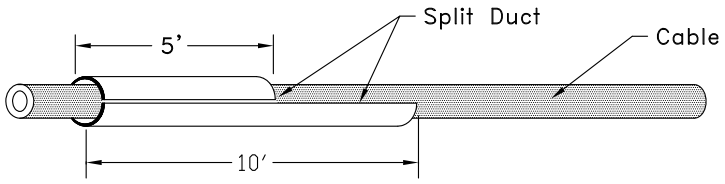

Figure 5

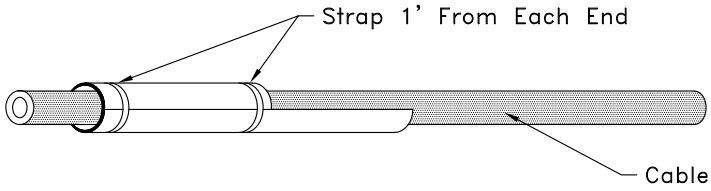

c. Place another 10 ft. split duct section over the open half of the bottom section. Butt ends tightly together (See Figure 6).

Figure 6

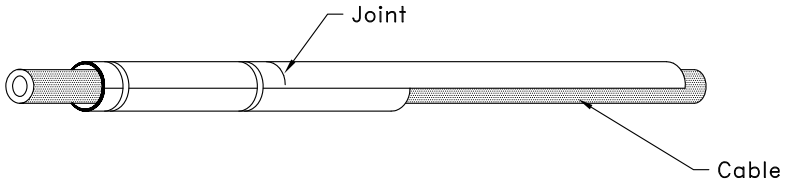

d. Using 2 inch wide sealing tape, put two wraps around the butted joint.

e. Secure a strap about 1 ft. beyond the butted joint (See Figure 7).

Figure 7

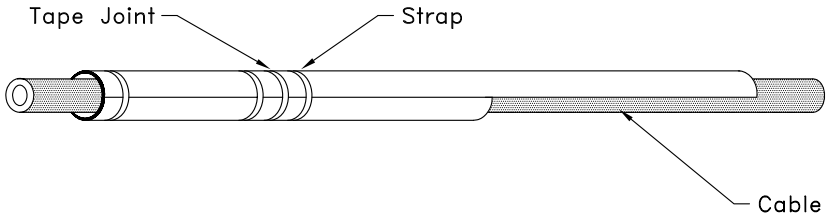

CITY OF BALTIMORE 1797	APPROVED: CHIEF, CONDUIT DIVISION; DIRECTOR, DEPARTMENT OF TRANSPORTATION	CITY OF BALTIMORE DEPARTMENT OF TRANSPORTATION CONDUIT DIVISION	ISSUED	REVISED	REVISED
			8 / 2010		
		ADAPTING PLASTIC DUCT TO OTHER DUCT MATERIALS	STANDARD NO. BC 892.01-4		
			SCALE : NONE	SHEET 4 OF 10	

ADAPTING PLASTIC DUCT TO OTHER DUCT MATERIALS

f. Lay another length of split duct underneath the cable, butt ends together, tape the butted joint and secure straps 1 ft. on each side of the joint (See Figure 8).

Figure 8

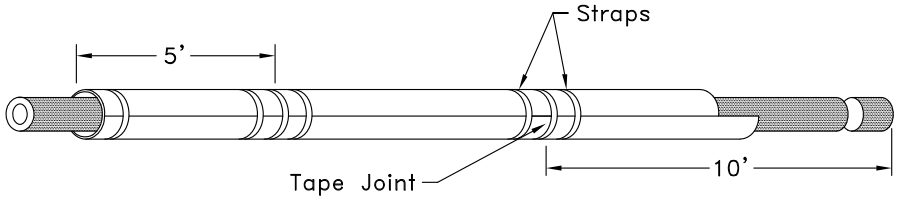

g. Repeat previous procedures to the end of the run.

2. Terminating Split Duct in a Manhole Wall

a. Open the split terminating end bell and place over cable.

b. Apply PVC cement to the end of the assembled split duct and slide terminator over the cemented area.

c. Apply plastic strap or duct tape over the joint.

d. End bell to be positioned flush with inside face of manhole wall (See Figure 9).

Figure 9

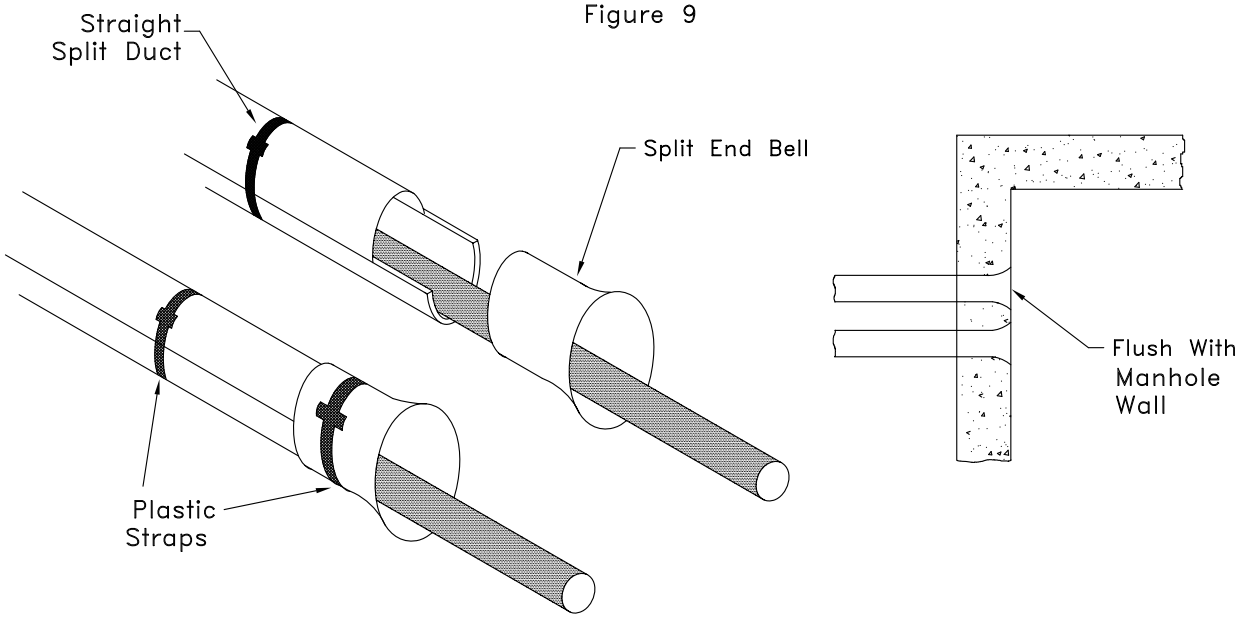

CITY OF BALTIMORE 1797	APPROVED: CHIEF, CONDUIT DIVISION; DIRECTOR, DEPARTMENT OF TRANSPORTATION	CITY OF BALTIMORE DEPARTMENT OF TRANSPORTATION CONDUIT DIVISION	ISSUED 8 / 2010	REVISED / REVISED
		ADAPTING PLASTIC DUCT TO OTHER DUCT MATERIALS	STANDARD NO. BC 892.01-5	
			SCALE : NONE	SHEET 5 OF 10

ADAPTING PLASTIC DUCT TO OTHER DUCT MATERIALS

3. Installing Split Duct Bends

For handling curves in the duct run or avoiding obstructions when enclosing existing cable, split 11–1/4° bends provide the flexibility for solving most field situations. By alternating bends with short lengths of straight split duct, it is possible to construct curves of almost any radius.

a. Place bottom half of the bend under the cable and under the end of the straight split duct section which has already been joined and strapped (See Figure 10).

Figure 10

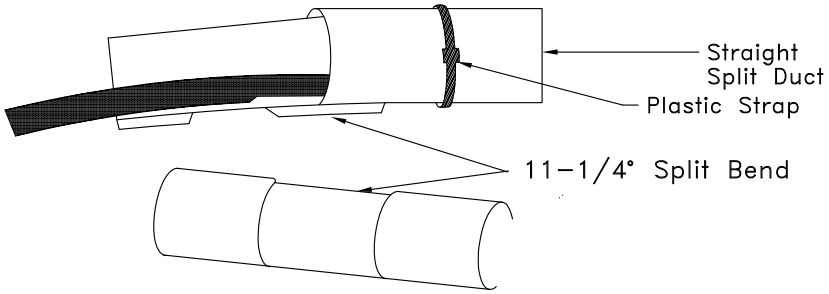

b. The bottom half of the second split duct section is then put in place at the other end of the bend (See Figure 11).

Figure 11

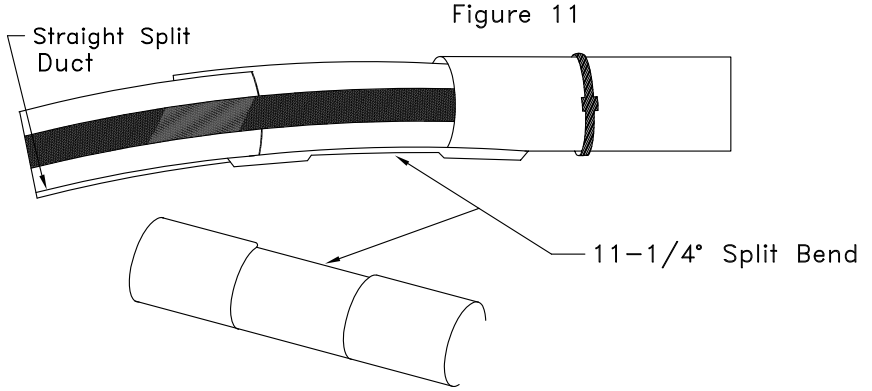

c. The top half of the second split duct section is then put in place and securely strapped or taped. Position strap about 6 inches from end of duct (See Figure 12).

Figure 12

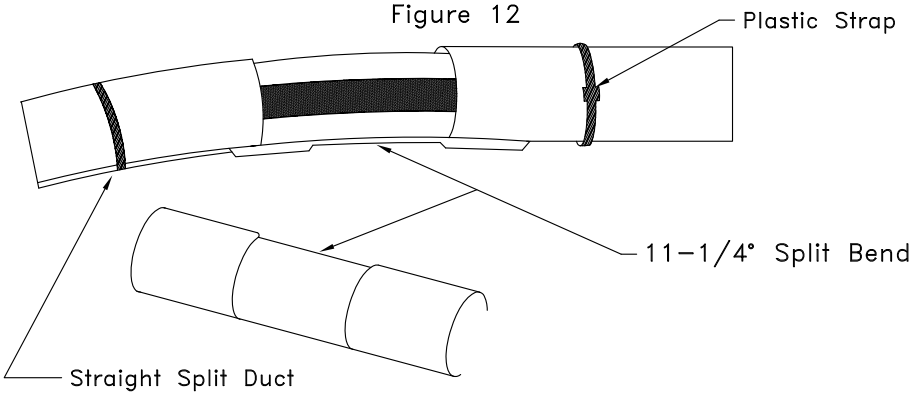

CITY OF BALTIMORE 1797	APPROVED: Richard L. Baker CHIEF, CONDUIT DIVISION Khalil Zaied DIRECTOR, DEPARTMENT OF TRANSPORTATION	CITY OF BALTIMORE DEPARTMENT OF TRANSPORTATION CONDUIT DIVISION	ISSUED / REVISED / REVISED 8 / 2010	
		ADAPTING PLASTIC DUCT TO OTHER DUCT MATERIALS	STANDARD NO. BC 892.01-6	
			SCALE : NONE	SHEET 6 OF 10

d. The top half of the split plastic bend can then be put in place and secured with plastic straps or tape over the bell ends. For added strength, a third strap can be secured around the middle of the bend. For even greater strength, use plastic cement on all joints when assembling (See Figure 13).

Figure 13

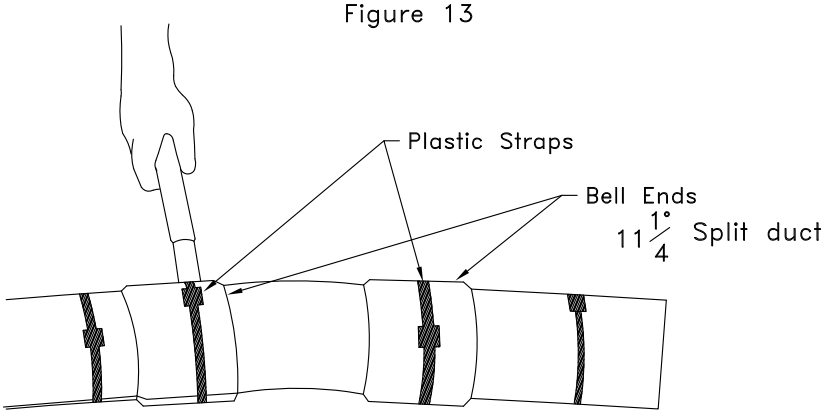

II. Unoccupied Duct

Joining or replacing existing unoccupied duct with solid plastic duct and fittings.

A. Various Duct Materials

1. When joining 3–1/4", 3–1/2" or 3–3/4" square bore plastic adapters to existing tile duct (See Figure 14), proceed as follows:

   a. Select the proper size square bore plastic duct adapter.

   b. Adapter must butt or fit snugly into the tile duct. Seal joint as detailed in Section I.

   c. Apply PVC cement to the outside round end of the adapter and install 4" coupling.

   d. Continue cementing a length of plastic duct to the other end of the run.

Figure 14

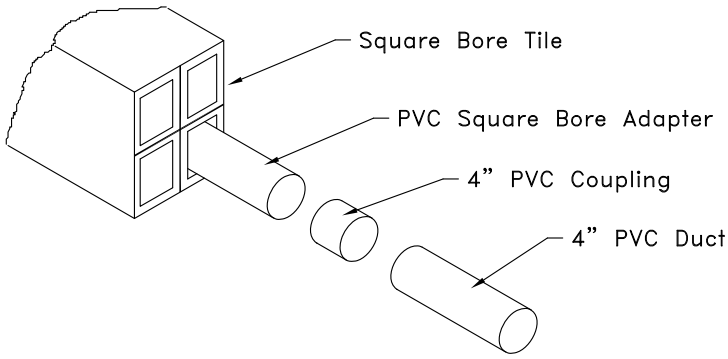

CITY OF BALTIMORE 1797	APPROVED: Rachel L. Baker CHIEF, CONDUIT DIVISION Khalil Zaied DIRECTOR, DEPARTMENT OF TRANSPORTATION	CITY OF BALTIMORE DEPARTMENT OF TRANSPORTATION CONDUIT DIVISION	ISSUED	REVISED	REVISED
			8 / 2010		
		ADAPTING PLASTIC DUCT TO OTHER DUCT MATERIALS	STANDARD NO. BC 892.01-7		
			SCALE : NONE	SHEET 7 OF 10	

2. When joining 4" plastic duct to 4" round bore concrete, asbestos cement or fiber duct (See Figure 15), proceed as follows:

   a. Use a 4" internal joining coupling.

   b. Apply a thin coating of sealing material to one end of the coupling and insert snugly into the round bore duct.

   c. Cement the other end of the internal joining coupling to a length of 4" plastic duct.

   d. Continue cementing lengths of plastic duct to the other end of the run.

Figure 15

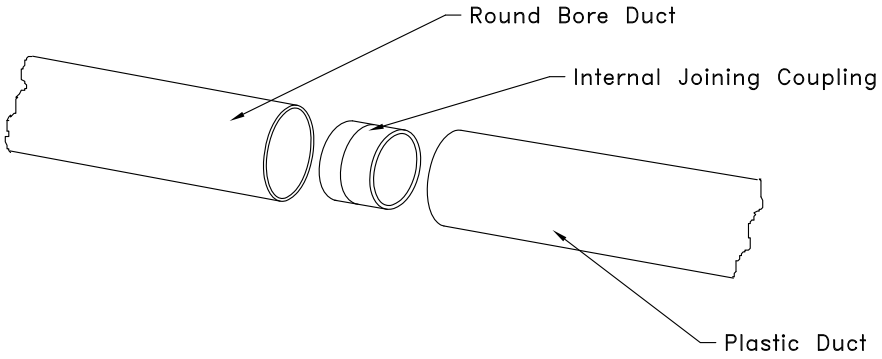

3. When joining 5" plastic duct to 4" round bore concrete, asbestos cement or fiber duct (See Figure 16), proceed as follows:

   a. Use a 4" internal joining coupling.

   b. Apply a thin coating of sealing material to one end of the coupling and insert snugly into the round bore duct.

   c. Cement the other end of the internal joining coupling to a short 4" nipple (See Note).

   d. Cement a 4" X 5" enlarging coupling to the 4" nipple.

Note: If staggering of couplings is desired, vary 4" nipple length.

ADAPTING PLASTIC DUCT TO OTHER DUCT MATERIALS

Figure 16

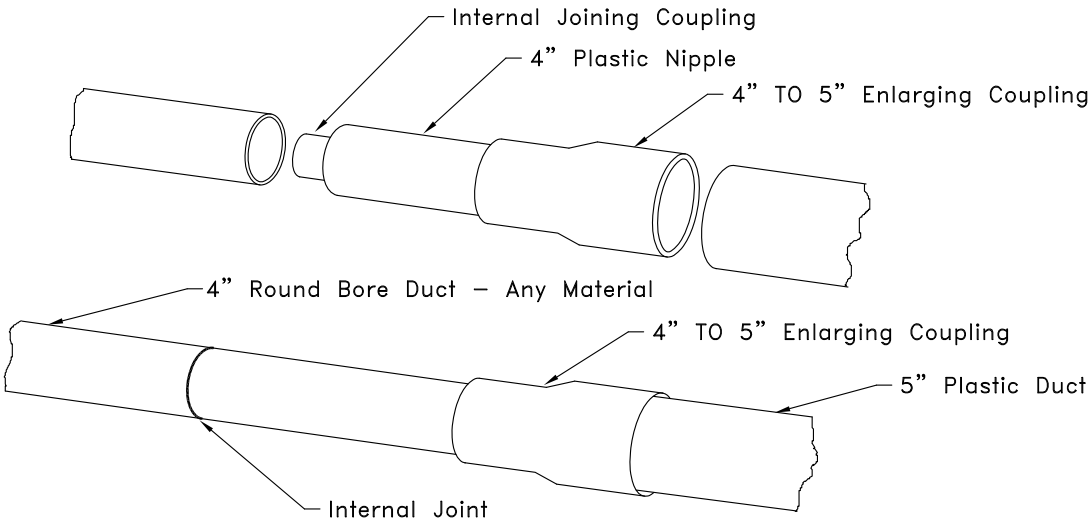

4. When joining 5" plastic duct to 5" threaded or non–threaded steel pipe (See Figure 17), proceed as follows:

   a. Use a standard 5" plastic coupling.

   b. Apply a thin coating of sealing material to the male end of the steel pipe.

   c. Slide on plastic coupling and apply duct tape over the joint.

   d. Cement a length of 5" plastic duct into the exposed end of the coupling.

   e. Continue cementing the 5" plastic duct to the other end of the run.

Figure 17

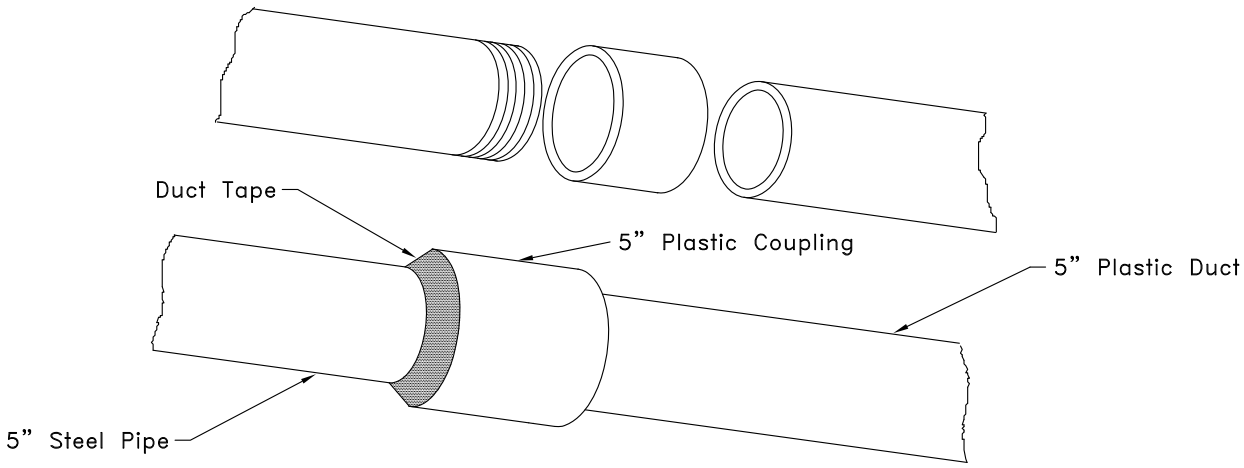

CITY OF BALTIMORE 1797	APPROVED: CHIEF, CONDUIT DIVISION; DIRECTOR, DEPARTMENT OF TRANSPORTATION	CITY OF BALTIMORE DEPARTMENT OF TRANSPORTATION CONDUIT DIVISION	ISSUED	REVISED	REVISED
			8 / 2010		
		ADAPTING PLASTIC DUCT TO OTHER DUCT MATERIALS	STANDARD NO. BC 892.01-9		
			SCALE : NONE	SHEET 9 OF 10	

ADAPTING PLASTIC DUCT TO OTHER DUCT MATERIALS

5. When joining 5" plastic duct to 4" threaded or non–threaded steel pipe (See Figure 18), proceed as follows:

   a. Use a 4" X 5" PVC enlarging coupling.

   b. Apply thin coating of sealing material to male end of the steel pipe.

   c. Slide on plastic enlarging coupling and apply duct tape over the joint.

   d. Cement a length of 5" plastic duct into the enlarging coupling and continue the run.

Figure 18

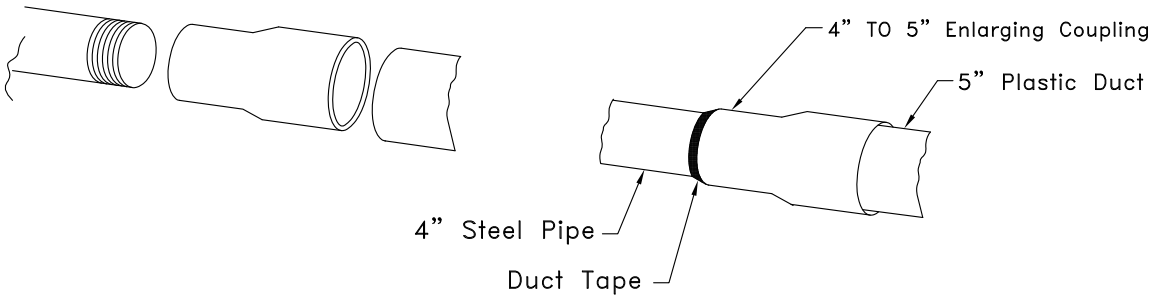

6. When joining 5" plastic duct to 5" fiber duct (See Figure 19), proceed as follows:

   a. Butt fiber duct and PVC duct tightly. Remove the white inner liner from the wraparound heat shrink sleeve. Position the wraparound sleeve centrally over the butt joint (2" min. overlap). Slide the metal channel into position along the rails of the wraparound sleeve. Shrink the wraparound sleeve starting in the middle. When the center area is completely shrunk, move toward one end. Then work toward the other. Move the torch with a brushing motion around the sleeve. Be sure to heat the whole circumference of the wraparound sleeve during shrinking. The joint is now complete. Allow to cool before moving.

   b. Continue run with 5" plastic duct.

Figure 19

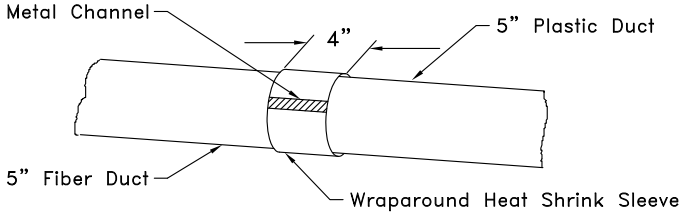

CITY OF BALTIMORE 1797	APPROVED: Richard L. Baker CHIEF, CONDUIT DIVISION Khalil Zaied DIRECTOR, DEPARTMENT OF TRANSPORTATION	CITY OF BALTIMORE DEPARTMENT OF TRANSPORTATION CONDUIT DIVISION	ISSUED / REVISED / REVISED 8 / 2010	
		ADAPTING PLASTIC DUCT TO OTHER DUCT MATERIALS	STANDARD NO. BC 892.01-10	
			SCALE : NONE	SHEET 10 OF 10

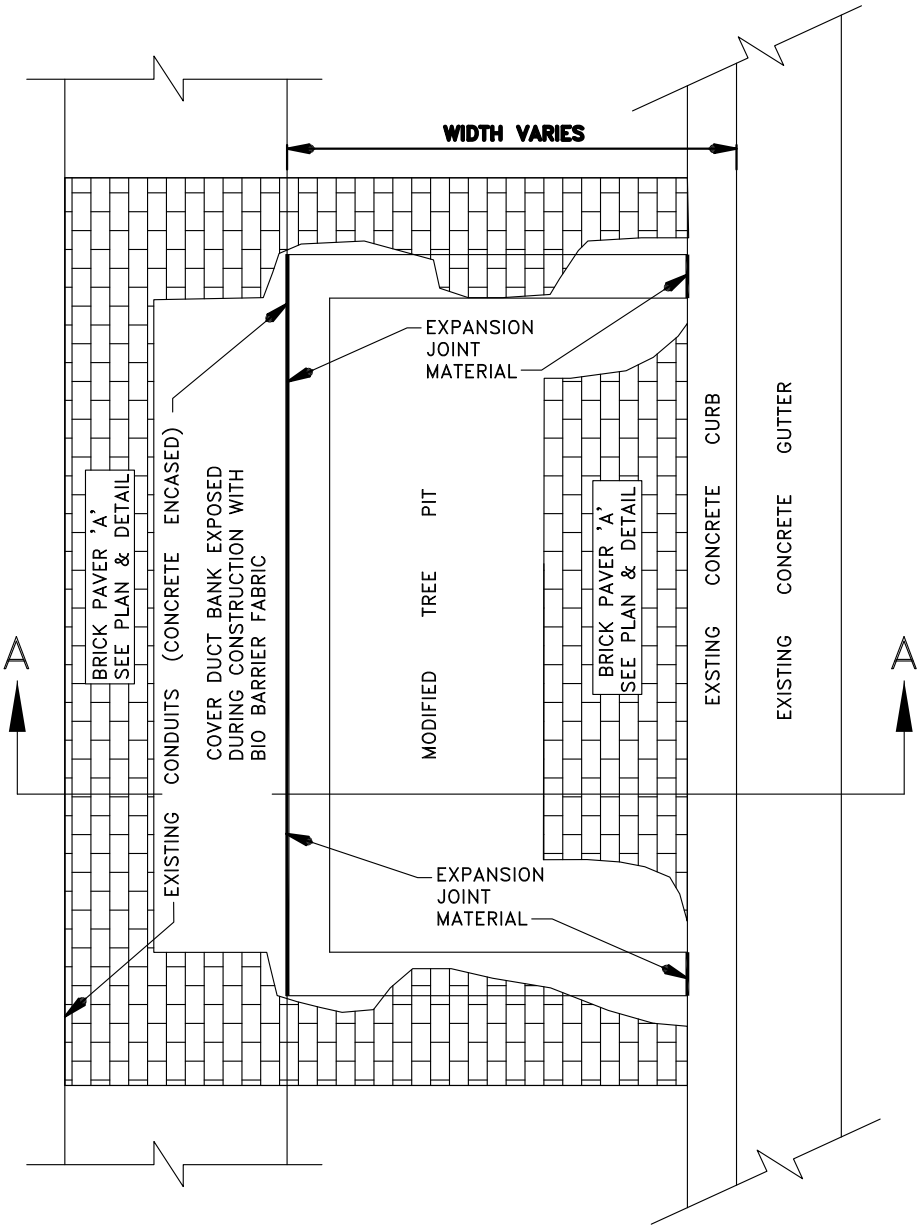

MODIFIED TREE PIT PLAN

NOT TO SCALE

CITY OF BALTIMORE 1797	APPROVED: Richard L. Baker CHIEF, CONDUIT DIVISION Khalil Zaied DIRECTOR, DEPARTMENT OF TRANSPORTATION	CITY OF BALTIMORE DEPARTMENT OF TRANSPORTATION CONDUIT DIVISION	ISSUED: 8 / 2010	REVISED REVISED
		TREE ROOT BARRIER FOR TREE PITS	STANDARD NO. BC 893.01-1	
			SCALE : NONE	SHEET 1 OF 4

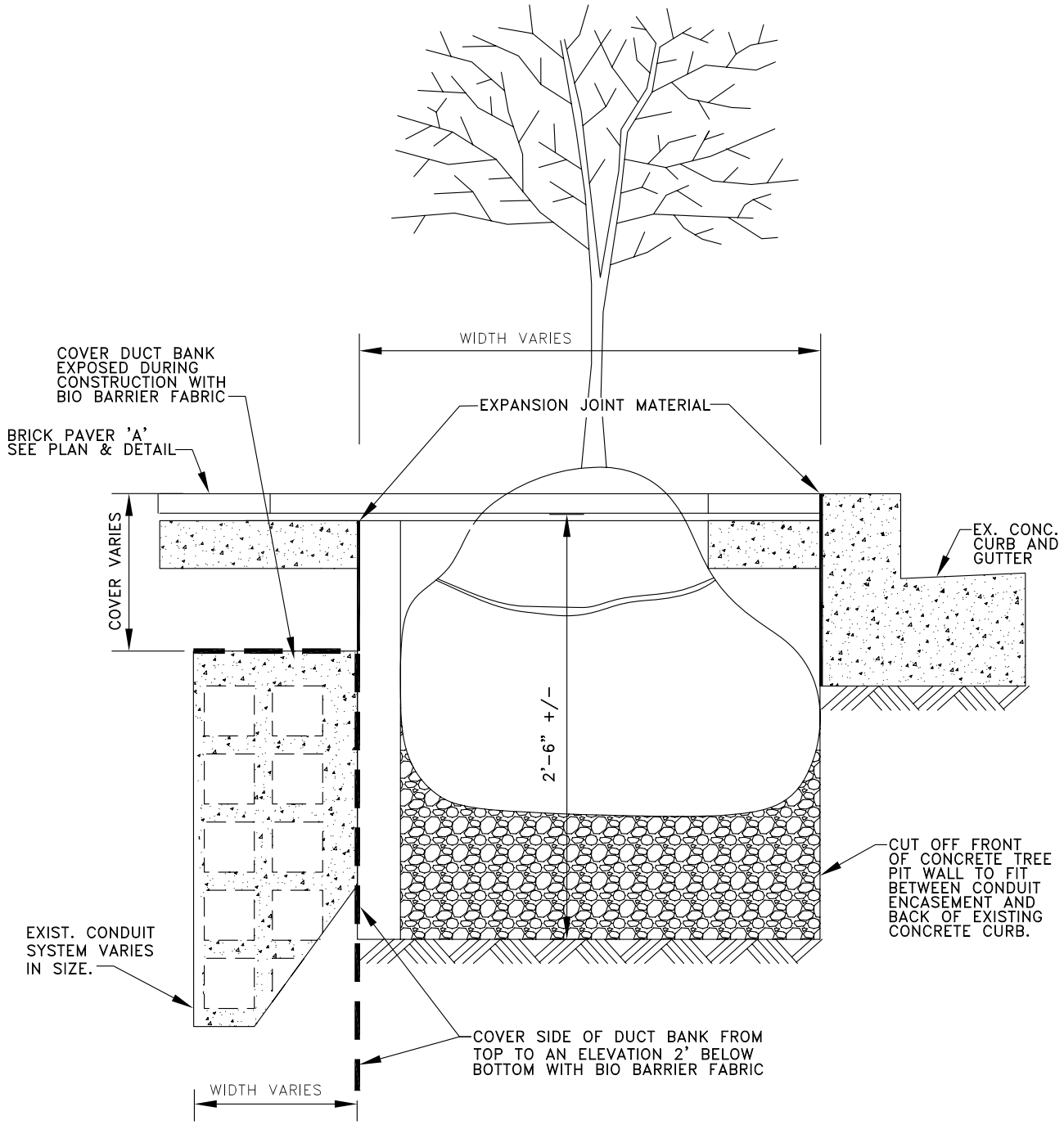

SECTION A–A

NOT TO SCALE

APPROVED:

CHIEF, CONDUIT DIVISION

DIRECTOR, DEPARTMENT OF TRANSPORTATION

CITY OF BALTIMORE
DEPARTMENT OF TRANSPORTATION
CONDUIT DIVISION

ISSUED	REVISED	REVISED
8 / 2010		

TREE ROOT BARRIER FOR TREE PITS

STANDARD NO.
BC 893.01- 2

SCALE : NONE

4.2 The Manufacturer's Certificate shall state that the root control product meets requirements of the specification as evaluated under the Manufacturer's quality control program. The certificate shall be attested to by a person having a legal authority to bind the Manufacturer.

4.3 Either mislabeling or misrepresentation of materials shall be reason to reject those products.

5. SAMPLING, TESTING AND ACCEPTANCE

5.1 Root control substrate product shall be subject to sampling and testing to verify conformance with this specification. Acceptance shall be based on manufacturer's certifications.

5.2 Testing shall be performed in accordance with the methods referenced in this specification for the indicated application. The number of specimens to test per sample is specified by each test method.

6. SHIPMENTS AND STORAGE

6.1 Product labels shall clearly show the manufacturer or supplier name, style number, and roll number and shall include a compliance statement certifying that all ingredients and inspection standards for this product have been met.

6.2 Each root control product roll shall be wrapped with a protective EVOH bag and placed in a box that will protect the product from damage due to shipment, water, sunlight and contaminants and to prevent premature release of herbicide. The protective wrapping shall be maintained during periods of shipment and storage.

6.3 During storage, root control product shall be elevated off the ground and out of direct sunlight. It shall remain sealed in EVOH protective bag inside shipping box at a temperature of not more than 110° F.

7. PRODUCT DESCRIPTION

Overall Product Major Compostion and Ingredients	Typical
Active Chemical*: 17.5%	Trifluralin (a.a,a–Trufluro 2,6 – dinitro – N,N– Dipropyl – p – toludine)
Inert Ingredients 82.5%	100% Spunbonded Polypropylene, Polyethylene and Carbon

Typical Values

Trifluralin Characteristics Method	English	Metric	Test
Vapor pressure (mm Hg @ 25 C)	1x10–4	1x10–4	EPA CG 1600
Solubility in Water (ppm @ 25)	<0.3	<0.3	EPA CG 1500

Fabric Properties	English	Metric	Test Method*
Unit Weight	3.9 oz/yd^2	130 g/m^2	ASTM D–5261
Grab Tensile Strength	130 lbs.	575 N	ASTM D–4632
Elongation at Break	60%	60%	ASTM D–4632
Punture Strength	40 lbs.	175 N	ASTM D–4833
Trap Tear	60 lbs.	265 N	ASTM D–4533
Permittivity	0.7 sec.	0.7 sec.	ASTM D–4491
AOS (Max Value)	0.21 mm	0.21 mm	ASTM D–4751
Ultraviolet Stability	70% @ 500 hrs	70% @ 500 hrs	ASTM D–4355

*Test methods or revision numbers available on request (17.5% Average trifluralin in total composite. Min. of 20% trifluralin in nodules.)
Available from ASTM, 1916 Race Street,Philadelphia, PA

CITY OF BALTIMORE 1797	APPROVED: CHIEF, CONDUIT DIVISION; DIRECTOR, DEPARTMENT OF TRANSPORTATION	CITY OF BALTIMORE DEPARTMENT OF TRANSPORTATION CONDUIT DIVISION	ISSUED 8 / 2010	REVISED	REVISED
		TREE ROOT BARRIER FOR TREE PITS	STANDARD NO. BC 893.01- 4		
			SCALE : NONE	SHEET 4 OF 4	